Structural Calculations

25-007 Muilenburg

DATE	October 27, 2026
COMPANY	SMC Design
DESIGNED BY	Steve Curtis
REVIEWED BY	
PROJECT FILE	25-007 Muilenburg

CONTENTS ›

Design Criteria

BUILDING CODE
2018 International Residential Code

LOADS
ASCE 7-16

WOOD
2018 NDS, Allowable Stress Design

STEEL
AISC 360-16, ASD

CONCRETE
ACI 318-14; retaining walls ACI 318-19 with IBC 1807 (their own sheets)

HEADERS
NDS 3.2.1 span (the opening plus half the required bearing each end); trimmers outside the opening, 1 1/2 in each, the loads running over them to the king studs (the strip over each bearing into it); king studs IRC Table R602.7.5, < 140 mph Exp. B / < 130 mph Exp. C

LOAD COMBINATIONS (ASD)
D, D+L, D+S, D+Lr, D+0.75L+0.75S, D+0.75L+0.75Lr

DEFLECTION
per member (see each sheet). Floor live: the member's limit, never looser than L/360; roof live or snow alone: L/240 (IRC Table R301.7); dead plus live: the member's limit. A cantilever on twice its length.

SOIL BEARING
1,500 psf allowable (as entered on the footings)

CONCRETE / REBAR
f'c = 3,000 psi, Fy = 60 ksi

SELF WEIGHT
included on every member checked and every footing; a timber truss's own timbers from its design; a generic truss, a stand-in for the supplier's, carries only the loads it hands on

Summary

	Members	Pass	Fail	Not checked	Loads only
Beams	21	21	0	0	0
Girders	3	0	0	0	3
Headers	26	26	0	0	0
Trusses / Rafters	20	10	0	0	10
Joists	15	15	0	0	0
Other Members	2	2	0	0	0
Footings	81	81	0	0	0
Total	**168**	**155**	**0**	**0**	**13**

Load path: 50 of 50 beams, girders and headers trace to a footing or a marked wall.

Connections: 13 hung ends and 12 posts checked -- every catalog hanger, cap and base specified passes; 12 chosen fabricated, not designed in this package.

Reading these calculations

- Each member sheet reads from the top: the verdict at the top right, the loads drawn over the member, Design Results with the location, allowable, percent used, load duration factor and governing combination, then the supports with the load each one hands on, the bracing and every load with where it came from.
- A percent marked used is demand over capacity; adequacy is the capacity remaining. A result within 1% of its limit prints with a decimal and in orange so a hair-thin pass reads as one.
- Everything is clickable: the contents, the load path boxes, the pink callouts on the plan sheets, and member names on the sheets (blue). BACK returns to the page
- you clicked from in PDF viewers that run JavaScript; in others it goes to the member's load path diagram.
- Calculated to the project's codes (2018 NDS, AISC 360-16, ACI 318-14, loads combined to ASCE 7-16) from the project file, with the load path solved at print time.

Structural Calculations

Table of Contents

Legend color & symbol key — KEY

3D Framing Model opens online — 3D

Plans

A1 Foundation Foundation - Loads — PLAN

A2 Floor 1st Floor Layout - 1St Level — PLAN

A3 Roof 1st Roof Layout - 1St Level — PLAN

Beams

Beam #1 — PASS
Beam #2 — PASS
Beam #3 — PASS
Beam #4 — PASS
Beam #5 — PASS
Beam #6 — PASS
Beam #7 — PASS
Beam #8 — PASS
Beam #9 — PASS
Beam #10 — PASS
Beam #11 — PASS
Beam #12 — PASS
Beam #13 — PASS
Beam #14 — PASS
Beam #15 — PASS
Beam #16 — PASS
Beam #17 — PASS
Beam #18 — PASS
Beam #19 — PASS
Beam #20 — PASS
Beam #21 — PASS

Girders

Girder #1 — TRACED
Girder #2 — TRACED
Girder #3 — TRACED

Headers

Header #1 — PASS
Header #2 — PASS
Header #3 — PASS
Header #4 — PASS
Header #5 — PASS
Header #6 — PASS
Header #7 — PASS

Headers (cont.)

Header #8 — PASS
Header #9 — PASS
Header #10 — PASS
Header #11 — PASS
Header #12 — PASS
Header #13 — PASS
Header #14 — PASS
Header #15 — PASS
Header #16 — PASS
Header #17 — PASS
Header #18 — PASS
Header #19 — PASS
Header #20 — PASS
Header #21 — PASS
Header #22 — PASS
Header #23 — PASS
Header #24 — PASS
Header #25 — PASS
Header #26 — PASS

Trusses / Rafters

Rafters #1 — PASS
Trusses #1
Rafters #2 — PASS
Trusses #2
Rafters #3 — PASS
Trusses #3
Rafters #4 — PASS
Trusses #4
Trusses #5
Rafters #6 — PASS
Trusses #6
Trusses #7
Rafters #8 — PASS
Trusses #8
Trusses #9
Trusses #10
Rafters #12 — PASS
Rafters #13 — PASS
Rafters #14 — PASS
Rafters #15 — PASS

Joists

Joists (cont.)

Joists #1	PASS
Joists #2	PASS
Joists #3	PASS
Joists #4	PASS
Joists #5	PASS
Joists #6	PASS
Joists #7	PASS
Joists #8	PASS
Joists #9	PASS
Joists #10	PASS
Deck Joists #11	PASS
Deck Joists #12	PASS
Deck Joists #13	PASS
Joists #14	PASS
Joists #15	PASS

Other Members

New Hip Beam	PASS
Outlookers	PASS

Footings

Footing #1	PASS
Footing - WD-#2	PASS
Footing - WD-#3	PASS
Footing #4	PASS
Footing #5	PASS
Footing #6	PASS
Footing #7	PASS
Footing #8	PASS
Footing #9	PASS
Footing #10	PASS
Footing #11	PASS
Footing #12	PASS
SpotFtg Hdr #1-1	PASS
SpotFtg Bm #1-2	PASS
SpotFtg Gdr #1-2	PASS
SpotFtg Hdr #1-2	PASS
SpotFtg Bm #2-1	PASS
SpotFtg Bm #2-2	PASS
SpotFtg Bm #3-1	PASS
SpotFtg Hdr #3-1	PASS
SpotFtg Bm #3-2	PASS
SpotFtg Gdr #3-2	PASS

Footings (cont.)

SpotFtg Hdr #3-2	PASS
SpotFtg Hdr #4-1	PASS
SpotFtg Bm #4-2	PASS
SpotFtg Hdr #4-2	PASS
SpotFtg Hdr #5-1	PASS
SpotFtg Bm #5-2	PASS
SpotFtg Hdr #5-2	PASS
SpotFtg Hdr #6-1	PASS
SpotFtg Bm #6-2	PASS
SpotFtg Hdr #6-2	PASS
SpotFtg Bm #7-1	PASS
SpotFtg Hdr #7-1	PASS
SpotFtg Bm #7-2	PASS
SpotFtg Hdr #7-3	PASS
SpotFtg Bm #8-2	PASS
SpotFtg Hdr 9-1	PASS
SpotFtg Bm #9-2	PASS
SpotFtg Hdr #9-2	PASS
SpotFtg Bm #10-1	PASS
SpotFtg Bm #10-2	PASS
SpotFtg Bm #11-1	PASS
SpotFtg Hdr #11-1	PASS
SpotFtg Bm #11-2	PASS
SpotFtg Hdr #11-2	PASS
SpotFtg Hdr #12-2	PASS
SpotFtg Hdr #13-1	PASS
SpotFtg Hdr #13-2	PASS
SpotFtg Hdr #14-1	PASS
SpotFtg Bm #14-2	PASS
SpotFtg Hdr #14-2	PASS
SpotFtg Bm #15-1	PASS
SpotFtg Hdr #15-1	PASS
SpotFtg Bm #15-2	PASS
SpotFtg Hdr #15-2	PASS
SpotFtg Hdr #16-1	PASS
SpotFtg Bm #16-2	PASS
SpotFtg Hdr #16-2	PASS
SpotFtg Hdr #17-1	PASS
SpotFtg Bm #17-2	PASS
SpotFtg Hdr #17-2	PASS
SpotFtg Bm #18-2	PASS
SpotFtg Hdr #18-2	PASS
SpotFtg Bm #18-3	PASS
SpotFtg Hdr #19-1	PASS

Footings (cont.)

SpotFtg Hdr #19-2	PASS
SpotFtg Bm #20-1	PASS
SpotFtg Hdr #20-1	PASS
SpotFtg Bm #20-2	PASS
SpotFtg Hdr #20-2	PASS
SpotFtg Bm #21-1	PASS
SpotFtg Hdr #21-1	PASS
SpotFtg Bm #21-2	PASS
SpotFtg Hdr #23-2	PASS
SpotFtg Hdr #24-1	PASS
SpotFtg Hdr #24-2	PASS
SpotFtg Hdr #25-1	PASS
SpotFtg Hdr #25-2	PASS
SpotFtg Hdr #26-1	PASS
SpotFtg Hdr #26-2	PASS

Connections and Simpson sheets

Connections schedule	SHEET
Ledgers each one's fastening, designed	SHEET
Simpson hardware	SHEET
p. 117 Face-Mount Hangers · Solid Sawn ·	SIMPSON
p. 126 LRUZ Face-Mount Rafter Hanger	SIMPSON
p. 147 PF/PFB/PFDB Post-Frame ·	SIMPSON
p. 160 Face-Mount Hangers · I-Joists, Glulam ·	SIMPSON
p. 163 Face-Mount Hangers · I-Joists, Glulam ·	SIMPSON
p. 300 H/TSP Seismic and Hurricane Ties	SIMPSON
p. 315 HL Heavy Angle and Gusset	SIMPSON

Legend

Color & symbol key for the load path diagrams

Load Path Diagrams

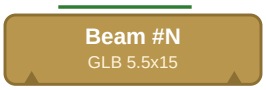

The member itself. Loads land on its top edge where they land on the member -- a bar is a uniform load over its length. Its reactions leave the bottom edge at the supports (ticks). Click it for its calc sheet.



What bears on the member: which member and reaction, and what it delivers. "2 x" is the same load twice.



Where the load goes next. The dot is that member's own design check: green passes, red fails. Every box is a link.



A column or post.

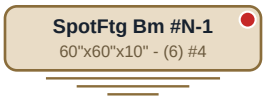

A footing: the load is in the ground.



What a link delivers, by load case: D dead, L floor live, Lr roof live, S snow, W wind. A minus sign is uplift.



Out of date: the load on the member below no longer matches this reaction.



Broken: the link delivers nothing, or points at a member that is gone.



Bears on a wall that is not modeled (the engineer's mark).



Not linked: the load leaves the model here. Verify where it bears.



Uplift: net uplift at a support under 0.6D + W, and any link whose loads add up to a pull, are boxed in amber.

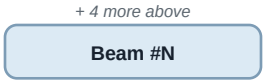

Footing sheets draw what loads the footing. A box stopped short says how many more feed it; click it for the rest.

Status Badges (TOC & sections)

PASS

Designed and passing; every reaction traces to a foundation.

TRACED

No design check of its own (loads only); every reaction traces to a foundation.

NOT TRACED

At least one reaction unverified — including anywhere DOWN the member's support chain. A footing in this member's chain can't offset its uplift — treat as structural fail.

UPLIFT FAIL

The member fails its own design check (see its calc sheet).

FAIL

UPLIFT

Amber tag by a TOC name: uplift condition in this member's chain (own negative reaction or an uplift footing).

Navigation

HOME

Back to the table of contents.

DIAGRAMS

On plan sheets: jump to the flowcharts.

ON PLAN

Jump to this member's pink callout on the drawing, zoomed in.

Beam #31

On a calc sheet: a diagram page that references this member.

A2 Floor 1st

Small blue pills on diagram titles: the sheets this member is drawn on.

Joists #8

Pink callouts ON the plan sheets are clickable — straight to that member.

Nearly everything is clickable: TOC rows, member boxes, incoming-load boxes, footings, plan callouts, and the calc sheets cross-link each other.
In most PDF viewers, Alt+Left steps back a view.

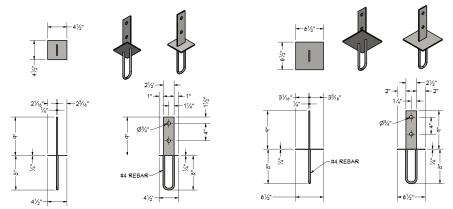

KNIFE PLATE 6X6 POST
1 1/2 IN = 1 FT

KNIFE PLATE 8X8 POST
1 1/2 IN = 1 FT

FOUNDATION @ WALKOUT BASEMENT DETAIL
3/4 IN = 1 FT

FOUNDATION @ GARAGE DETAIL
3/4 IN = 1 FT

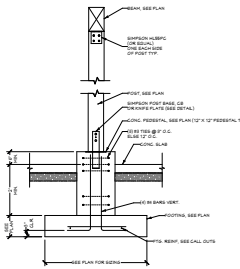

POST FOUNDATION DETAIL
3/4 IN = 1 FT

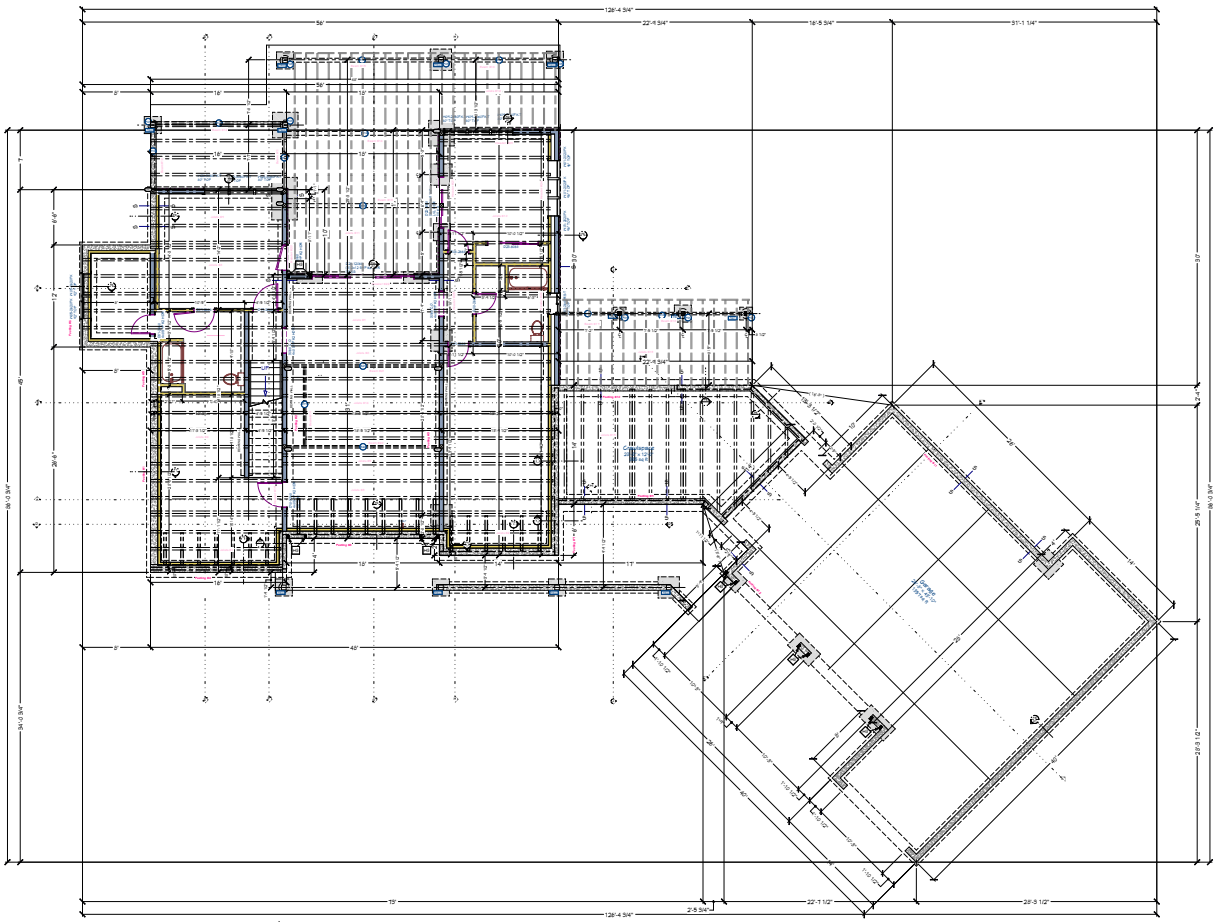

FOUNDATION - LOADS
1/4 IN = 1 FT

FOUNDATION NOTES:
ALL ANGLE 45° U.N.O.
8" THICK WALLS CONCRETE FOUNDATION WALLS
ALL INTERIOR DIMENSIONS ARE TO CENTER OF FOOTING

SHEET INDEX

PAGE	TITLE
A1	FOUNDATOIN
A2	FLOOR LAYOUT - 1ST LEVEL
A3	ROOF LAYOUT - 1ST LEVEL

FOUNDATION CONCRETE (EST.)

FOOTING	39 Cu Yd
STEM WALLS	68 Cu Yd
CONCRETE SLAB	60 Cu Yd
TOTAL CONCRETE	163 Cu Yd

PROJECT NO.
25-007

4 BDRM 3 BATH W/ WALKOUT BASEMENT
HUILENBURG RESIDENCE - PARCEL - D02 095BA OCONEE CO., GA

SHEET SIZE
ARCH E (36" x 48")

INITIAL DATE 11/12/2025
PRINT DATE 10/21/2026

DRAWN BY:
Steve

FOUNDATOIN

SMC Design
209.241.1255
Nampa, ID

SHEET NUMBER
A1
PAGE 1 OF 9

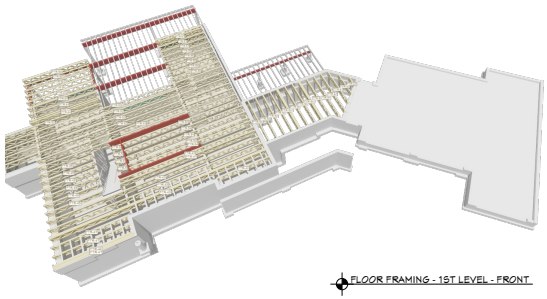

FLOOR FRAMING - 1ST LEVEL - FRONT

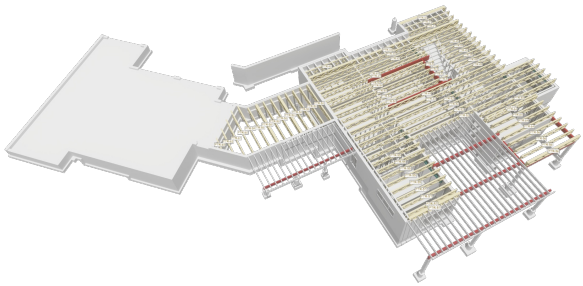

FLOOR FRAMING - 1ST LEVEL - REAR

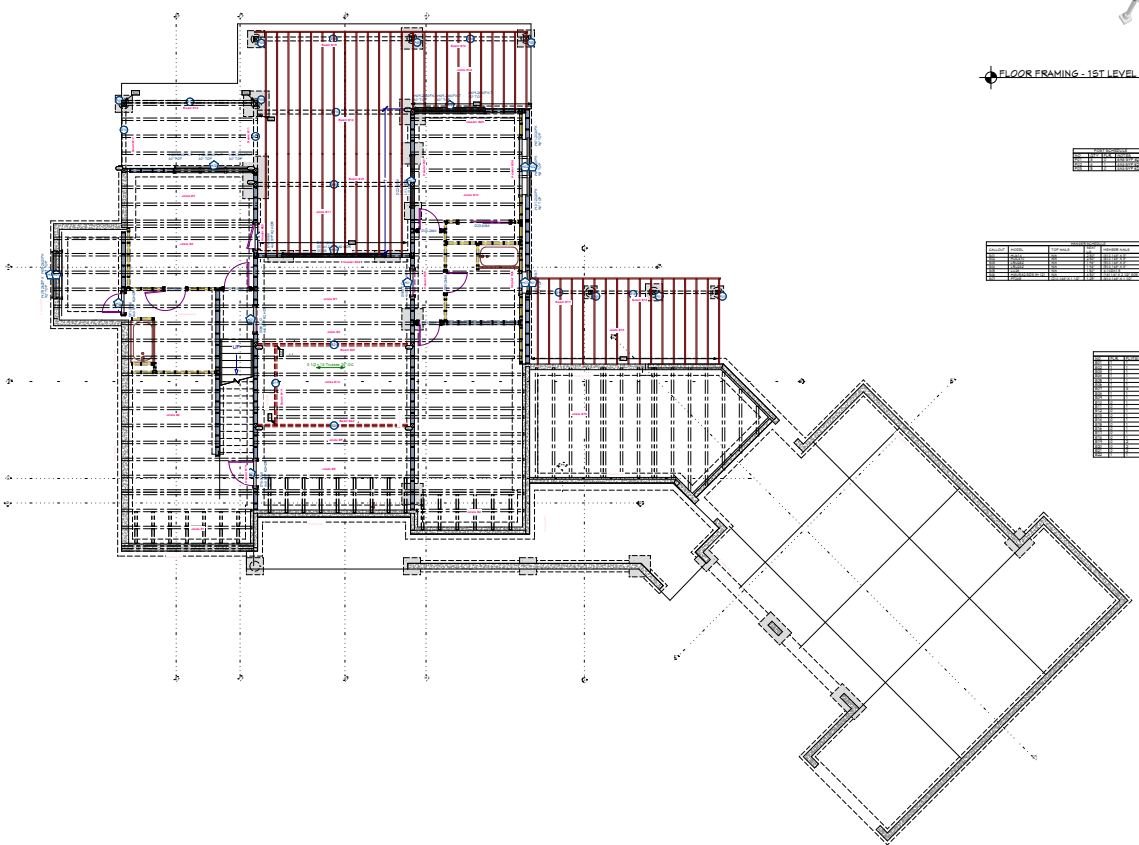

FLOOR FRAME SHEET - LOADS
1/4 IN = 1 FT

PROJECT NO.	25-007
	4 BDRM 3 BATH W/ WALKOUT BASEMENT MUILENBURG RESIDENCE - PARCEL - D 02 035BA OCONEE CO., GA
	CONTRACTOR TO VERIFY ALL DETAILS, DIMENSIONS, AND SPECIFICATIONS PRIOR CONSTRUCTION, AND REPORT ANY OMISSION AND/OR ERRORS TO SMC DESIGN. THE PURCHASER OR BUILDER OF THIS PLAN RELEASES SMC DESIGN FROM ANY CLAIMS, LITIGATIONS OR SUITS THAT MAY ARISE DURING CONSTRUCTION OR ANYTIME THEREAFTER.
SHEET SIZE	ARCH E (36" x 48")
INITIAL DATE	11/12/2025
PRINT DATE	10/21/2026
DRAWN BY	Steve
	FLOOR LAYOUT - 1ST LEVEL
	SMC Design 205.249.7238 Nampa, ID
SHEET NUMBER	A2 PAGE 2 OF 3

SHEET INDEX

PAGE	TITLE
A1	FOUNDATOIN
A2	FLOOR LAYOUT - 1ST LEVEL
A3	ROOF LAYOUT - 1ST LEVEL

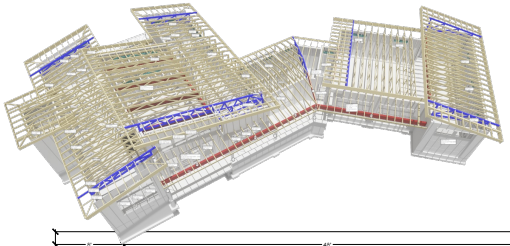

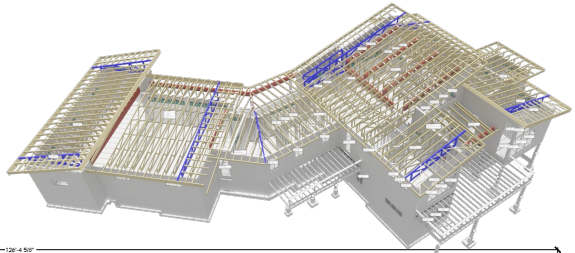

SCAN FOR CONNECTS PLAN

ROOF FRAMING- 1ST LEVEL - FRONT

ROOF FRAMING- 1ST LEVEL - REAR

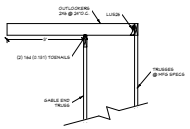

OUTLOOKER DETAIL
3/4 IN = 1 FT

ROOF FRAMING NOTES:
ALL EAVE OVERHANGS 36" UNO
ALL GABLE OVERHANGS 36" UNO

ROOF MATERIALS

RIDGE CAP	42 Ft.
VALLEY FLASHING	24 Ft.
90 DEG. FLASHING	100 Ft.
BEND TO SLOPE FLASHING	126 Ft.
RIDGE VENT	84 Ft.
ASPH. ROOFING	3,411 Sq. Ft.
OSB	200 Sf.
GABLE FASCIA	320 Ft.
EAVE FASCIA	480 Ft.
DRIP EDGE	746 Ft.

SHEET INDEX

PAGE	TITLE
A1	FOUNDATION
A2	FLOOR LAYOUT - 1ST LEVEL
A3	ROOF LAYOUT - 1ST LEVEL

ROOF LAYOUT SHEET - WORK - LOADS
1/4 IN = 1 FT

PROJECT NO.
25-007

4 BDRM 3 BATH W/WALKOUT BASEMENT
HUILENBURG RESIDENCE - PARCEL - D02 095BA OCONEE CO., GA

CONTRACTOR TO VERIFY ALL DETAILS, DIMENSIONS, AND SPECIFICATIONS PRIOR TO CONSTRUCTION. ANY DISCREPANCIES OR OMISSIONS MUST BE REPORTED TO SMC DESIGN IN WRITING BEFORE PROCEEDING WITH THE WORK. FAILURE TO DO SO MAY RESULT IN CORRECTIVE WORK AT THE CONTRACTOR'S EXPENSE. SMC DESIGN AND/OR ITS PRINCIPALS ASSUME NO RESPONSIBILITY FOR BUILDER OR OWNER CONSTRUCTION PERFORMED FROM PLANS THAT HAVE BEEN ALTERED IN ANY WAY. ALL ALTERATIONS MUST BE SIGNED, DATED AND RETURNED TO SMC DESIGN BEFORE CONSTRUCTION. SMC DESIGN AND/OR ITS PRINCIPALS ASSUME NO RESPONSIBILITY FOR BUILDER OR OWNER CONSTRUCTION PERFORMED FROM PLANS THAT HAVE BEEN ALTERED IN ANY WAY. ALL ALTERATIONS MUST BE SIGNED, DATED AND RETURNED TO SMC DESIGN BEFORE CONSTRUCTION. OWNER/BUILDER ASSUMES ALL RESPONSIBILITY FOR ERRORS OR OMISSIONS ON SHOP DRAWINGS AFTER THEY HAVE BEEN APPROVED BY SMC DESIGN. ANY DEVIATIONS FROM THE APPROVED SHOP DRAWINGS MUST BE BROUGHT TO THE ATTENTION OF SMC DESIGN IN WRITING. SMC DESIGN AND/OR ITS PRINCIPALS ASSUME NO RESPONSIBILITY FOR BUILDER OR OWNER CONSTRUCTION PERFORMED FROM PLANS THAT HAVE BEEN ALTERED IN ANY WAY. ALL ALTERATIONS MUST BE SIGNED, DATED AND RETURNED TO SMC DESIGN BEFORE CONSTRUCTION. OWNER/BUILDER ASSUMES ALL RESPONSIBILITY FOR ERRORS OR OMISSIONS ON SHOP DRAWINGS AFTER THEY HAVE BEEN APPROVED BY SMC DESIGN. ANY DEVIATIONS FROM THE APPROVED SHOP DRAWINGS MUST BE BROUGHT TO THE ATTENTION OF SMC DESIGN IN WRITING.

SHEET SIZE
ARCH E (36" x 48")

INITIAL PLOT: 11/12/2025
LAST PLOT: 10/27/2026

DRAWN BY:
Steve

ROOF LAYOUT - 1ST LEVEL

SMC Design
209 24th 1235
Nampa, ID

SHEET NUMBER
A3
PAGE 3 OF 9

Beam #1 | GLB 5.5x15

ON PLAN: A3 Roof 1st PASS

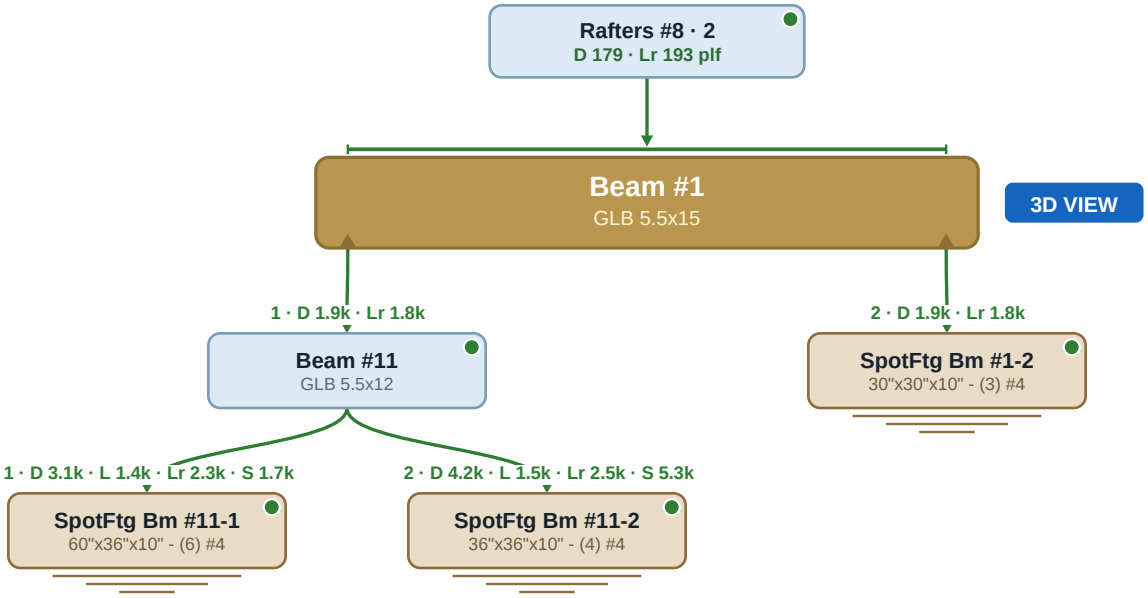

Beam #2 | GLB 5.5x21

ON PLAN: A3 Roof 1st PASS

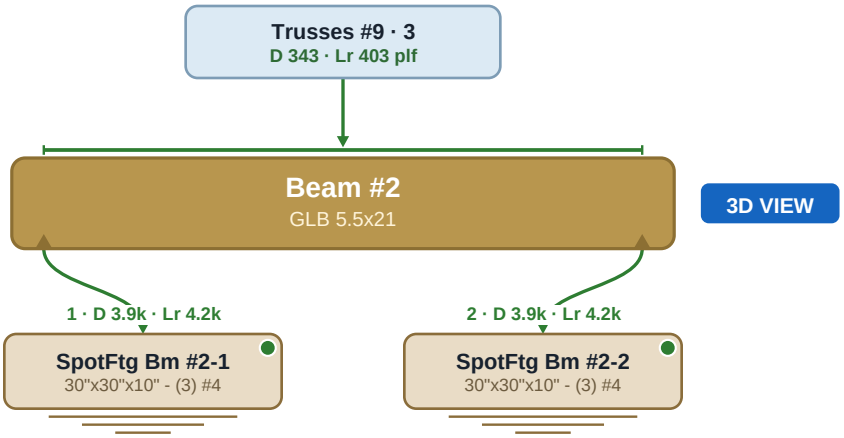

Beam #3 | GLB 6.75x15

ON PLAN: A3 Roof 1st

PASS

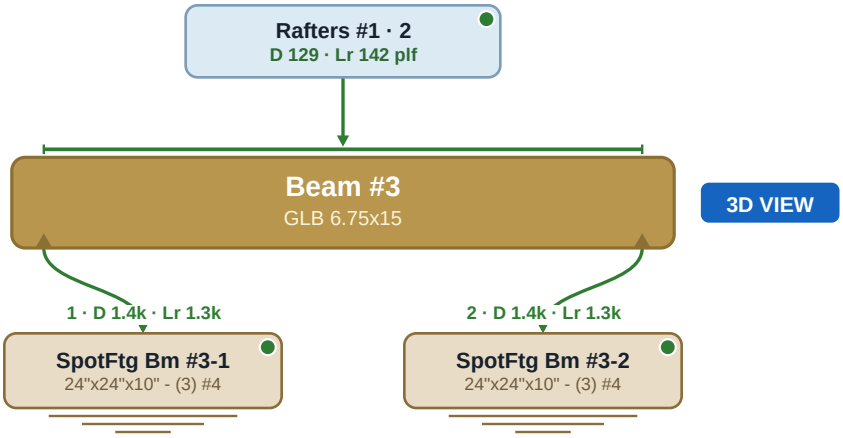

Beam #4 | GLB 6.75x15

ON PLAN: A3 Roof 1st

PASS

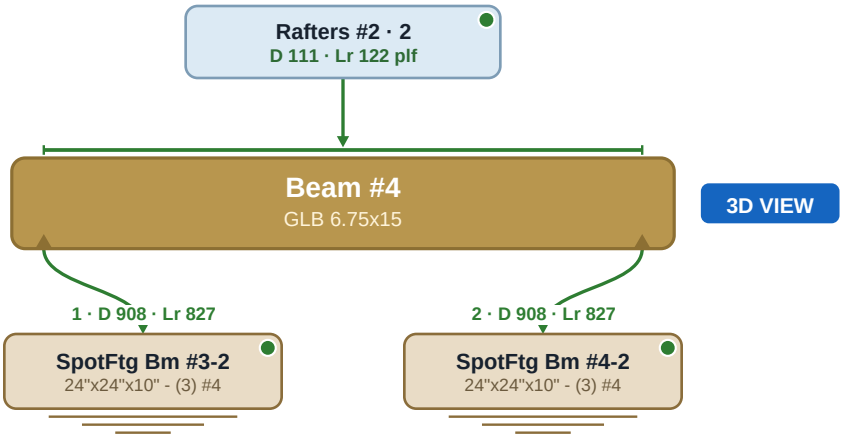

Beam #5 | GLB 6.75x15

ON PLAN: A3 Roof 1st

PASS

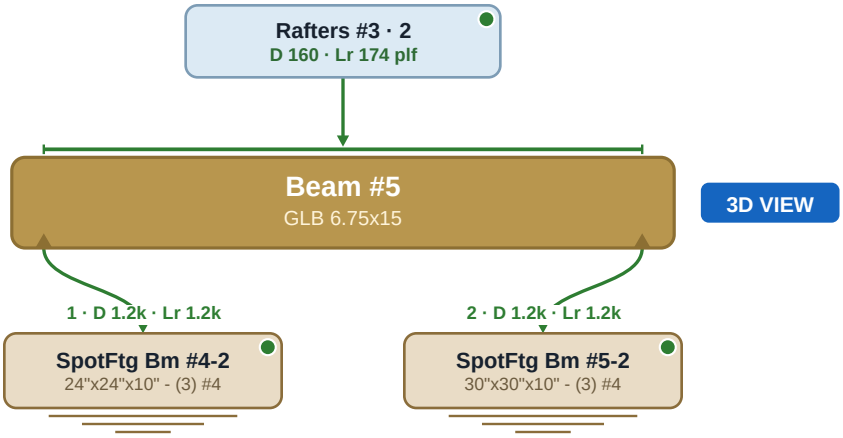

Beam #6 | GLB 6.75x15

ON PLAN: A3 Roof 1st

PASS

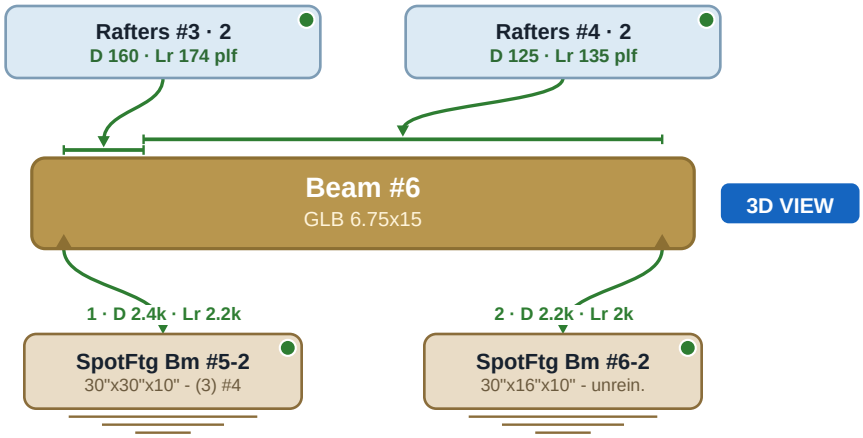

Beam #7 | (3) 2x12

ON PLAN: A3 Roof 1st PASS

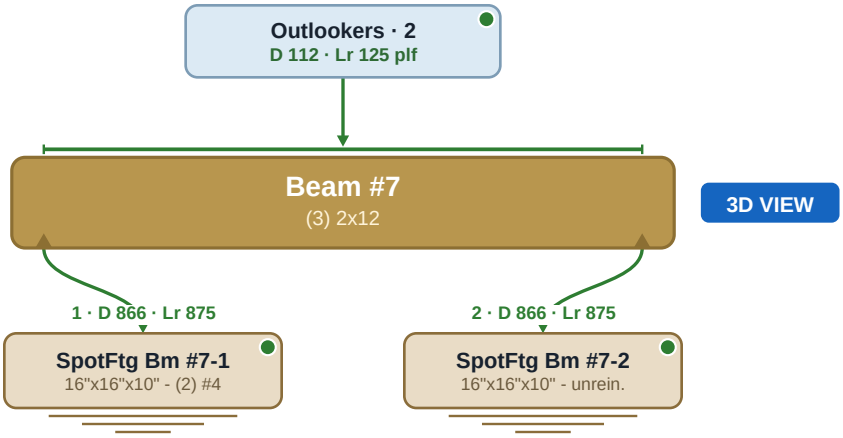

Beam #8 | GLB 5.5x24

ON PLAN: A3 Roof 1st PASS

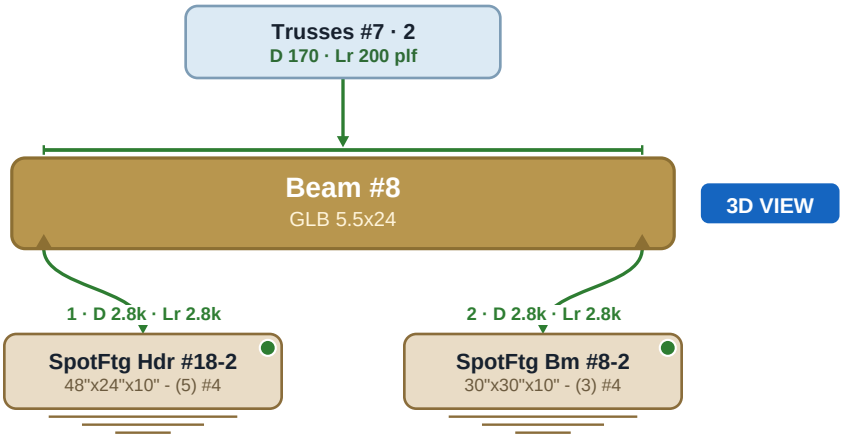

Beam #9 | 4x10

ON PLAN: A3 Roof 1st

PASS

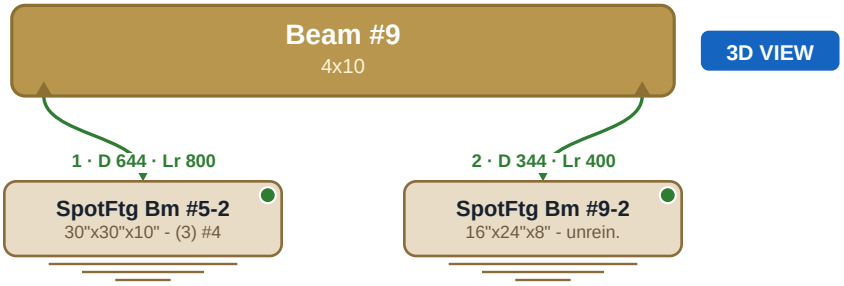

Beam #10 | GLB 5.5x12

ON PLAN: A2 Floor 1st

PASS

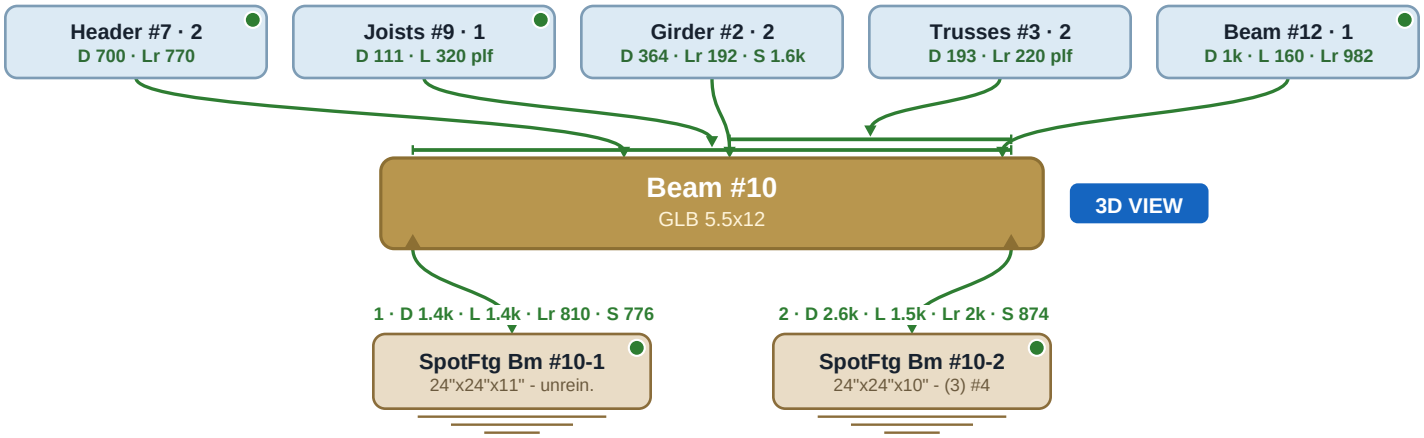

Beam #11 | GLB 5.5x12

ON PLAN: A2 Floor 1st

PASS

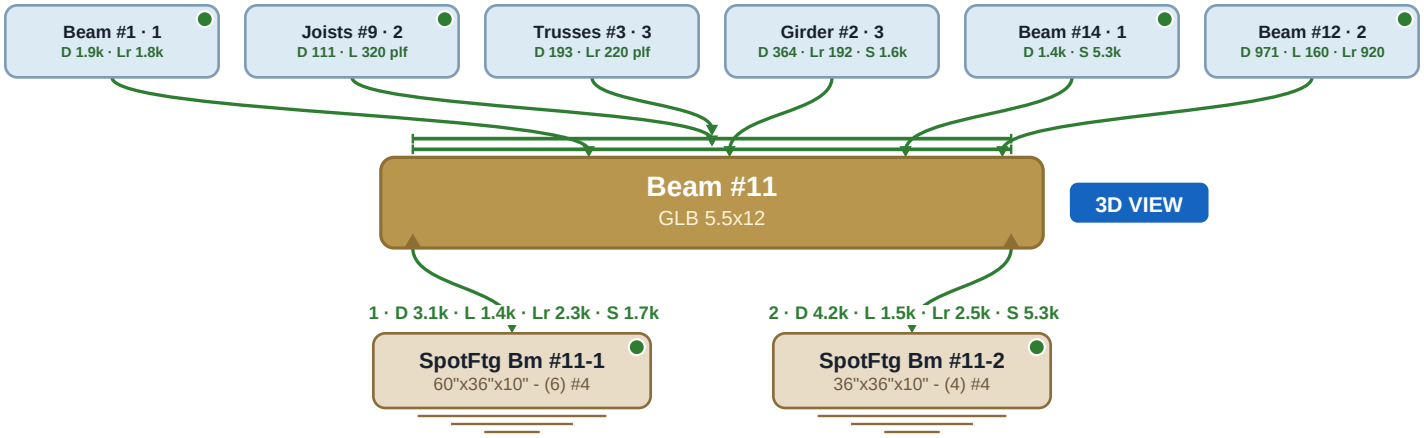

Beam #12 | GLB 3.5x12

ON PLAN: A2 Floor 1st

PASS

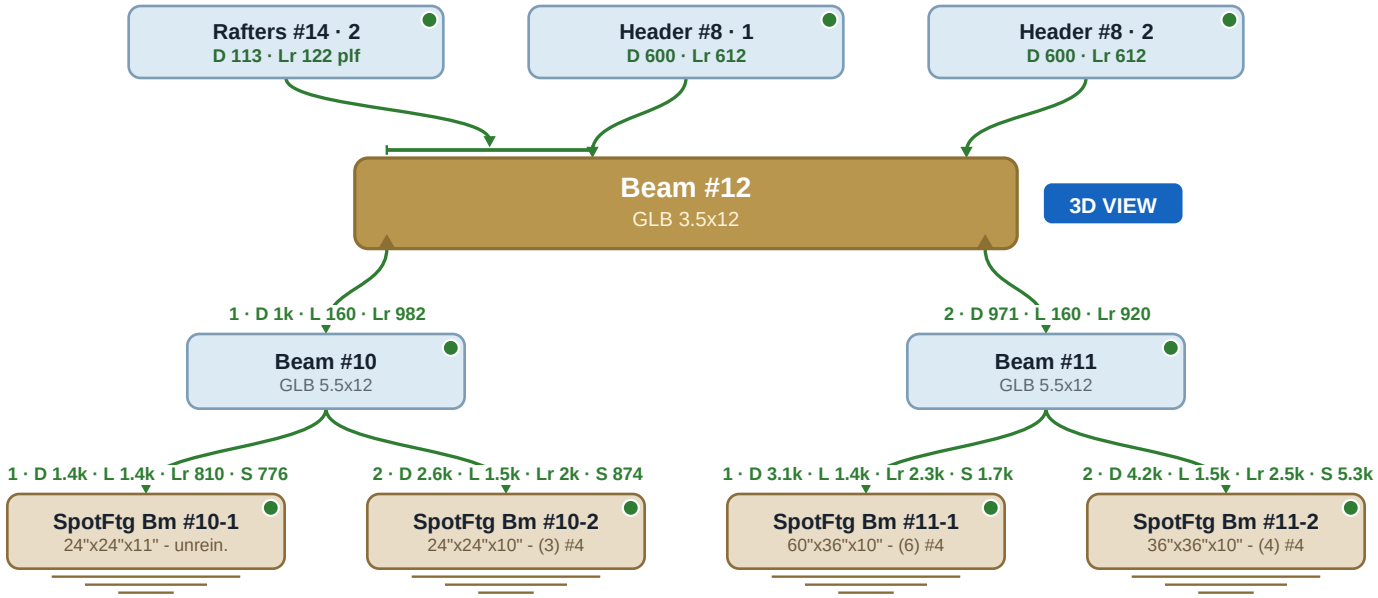

Beam #13 | GLB 5.5x18

ON PLAN: A2 Floor 1st

PASS

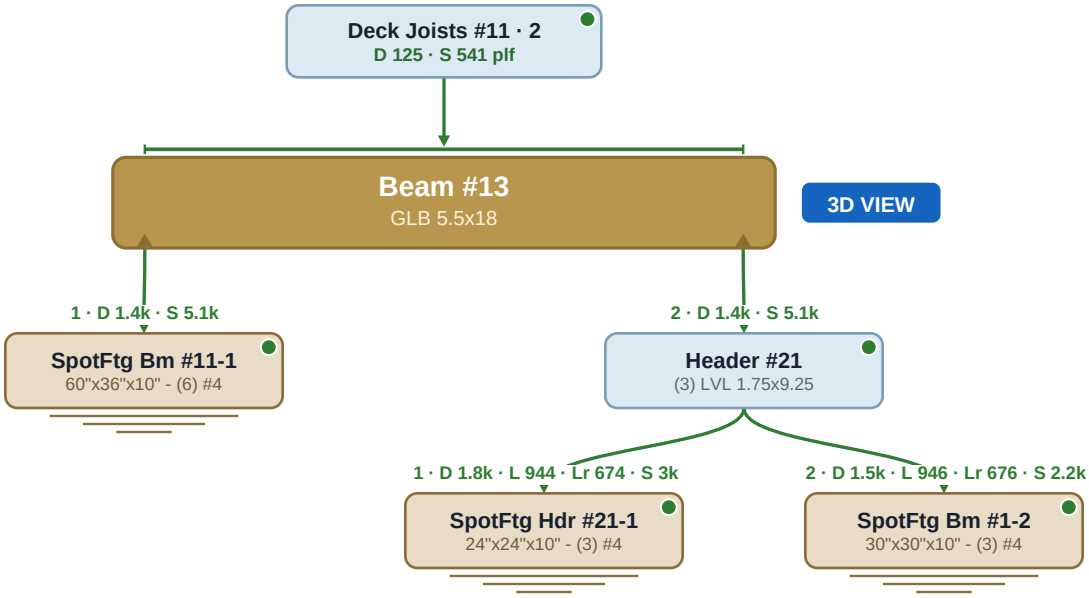

Beam #14 | GLB 5.5x18

ON PLAN: A2 Floor 1st

PASS

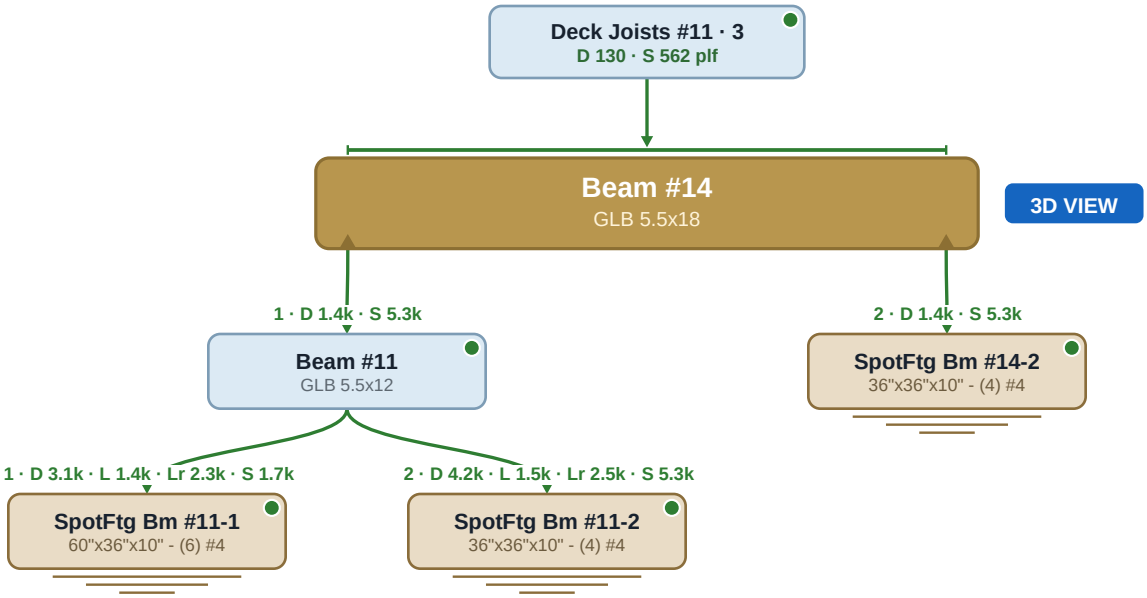

Beam #15 | GLB 5.5x15

ON PLAN: A2 Floor 1st

PASS

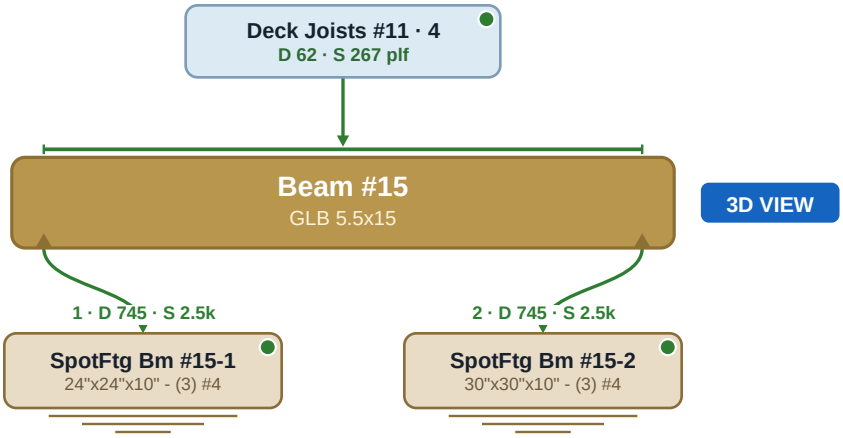

Beam #16 | GLB 5.5x15

ON PLAN: A2 Floor 1st

PASS

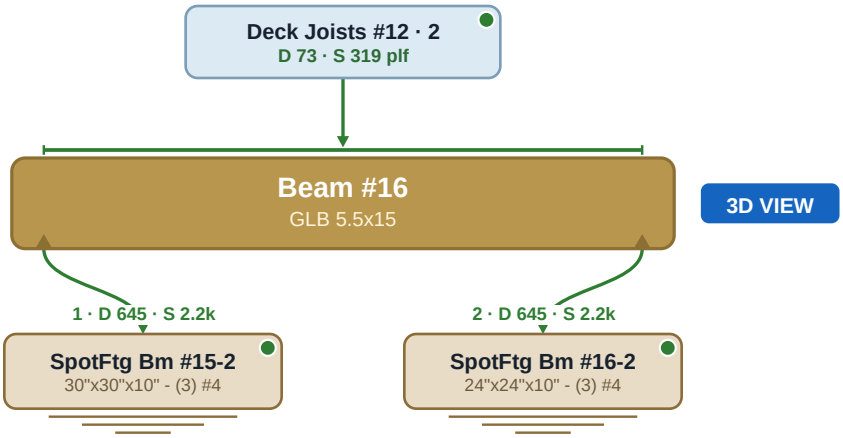

Beam #17 | 4x10

ON PLAN: A2 Floor 1st

PASS

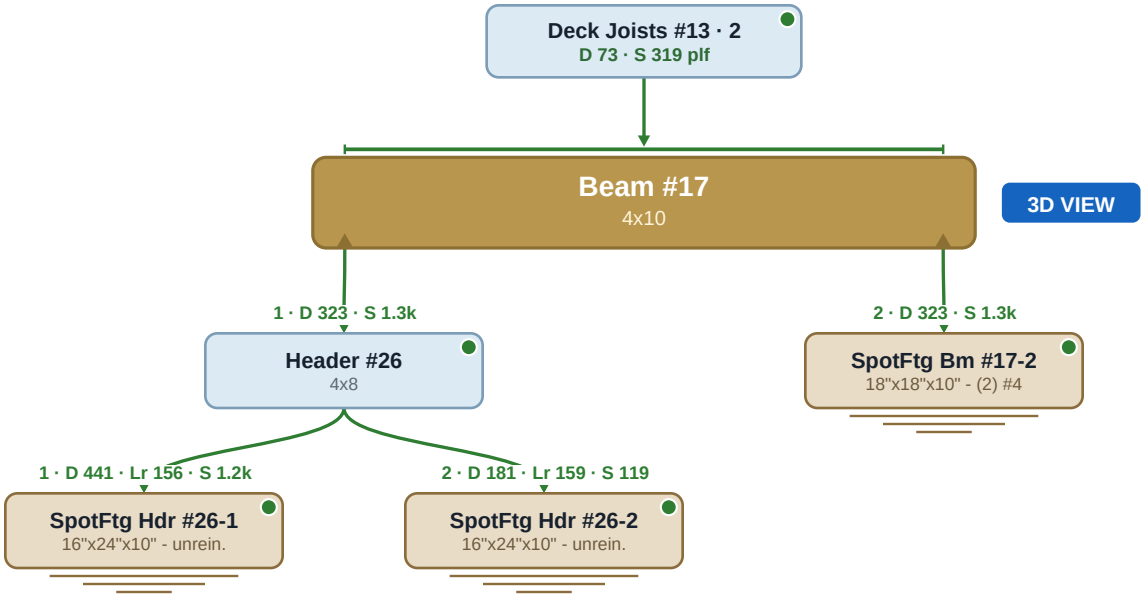

Beam #18 | 4x10

ON PLAN: A2 Floor 1st

PASS

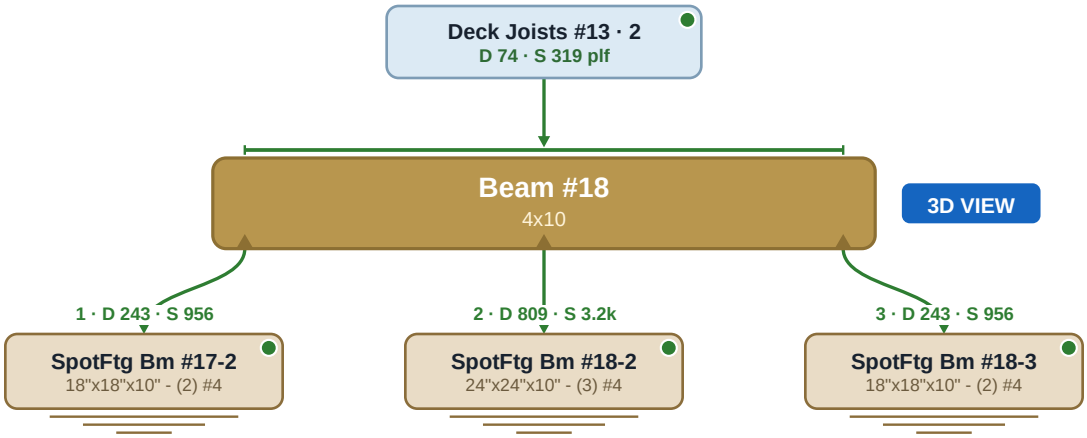

Beam #19 | (2) LVL 1.75x18

ON PLAN: A2 Floor 1st PASS

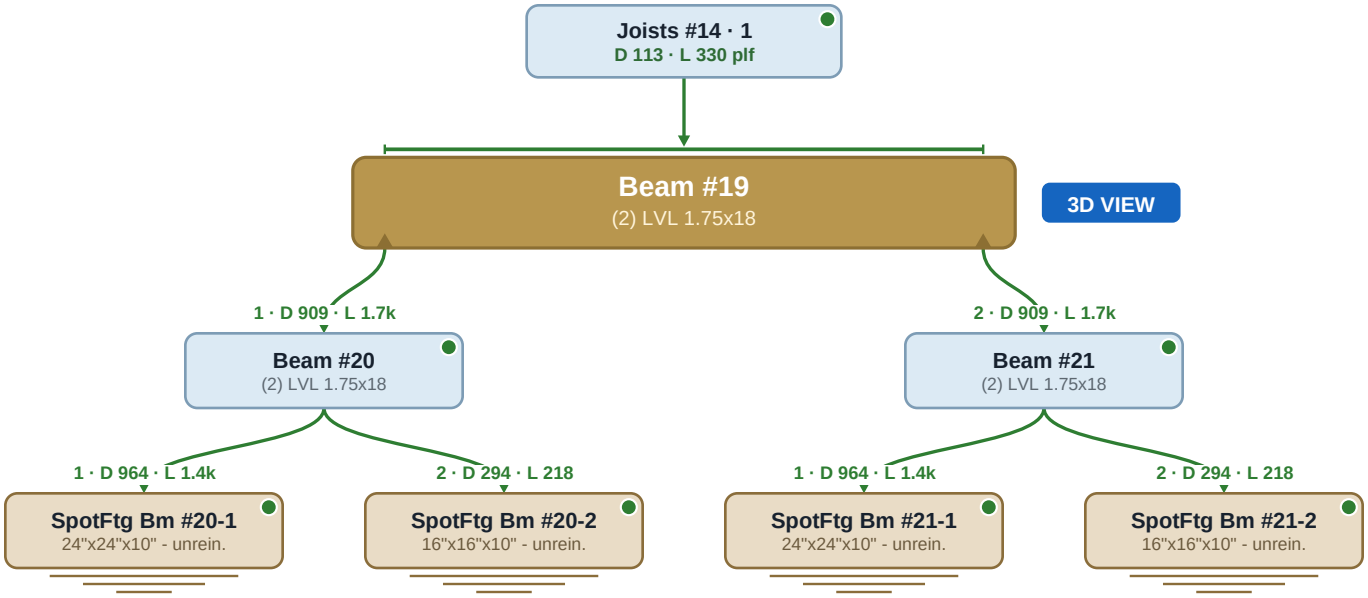

Beam #20 | (2) LVL 1.75x18

ON PLAN: A2 Floor 1st PASS

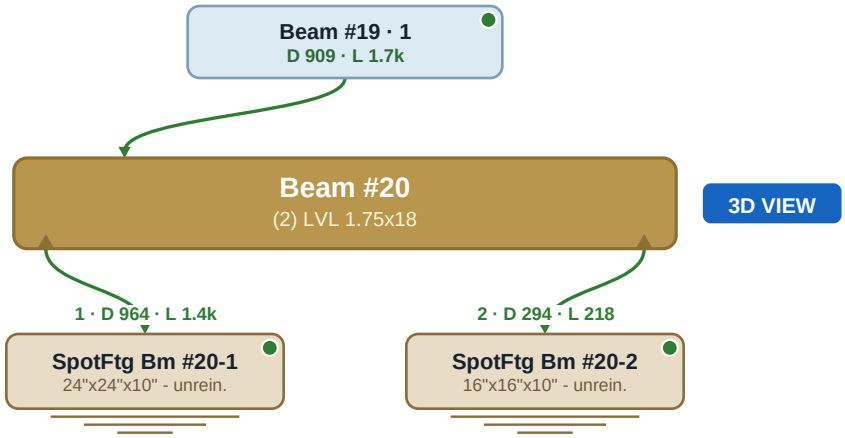

Beam #21 | (2) LVL 1.75x18

ON PLAN: A2 Floor 1st PASS

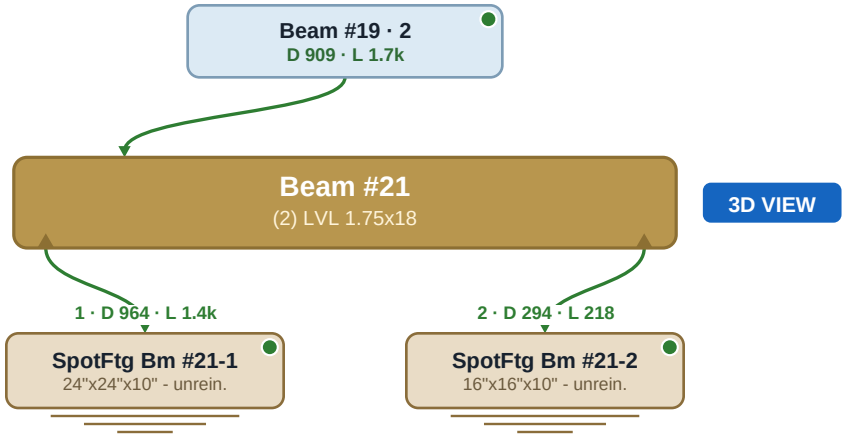

Girder #1 | 2-ply girder truss

ON PLAN: A3 Roof 1st PASS

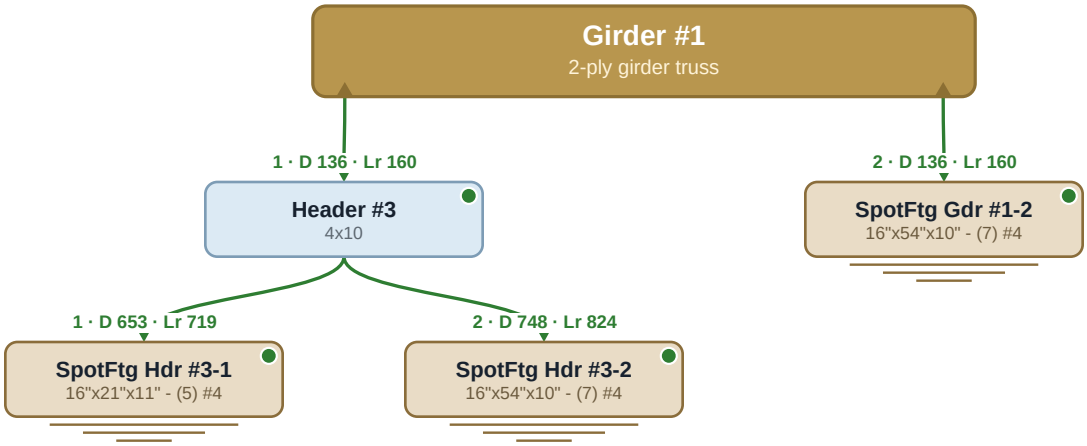

Girder #2 | 2-ply girder truss

ON PLAN: A3 Roof 1st PASS

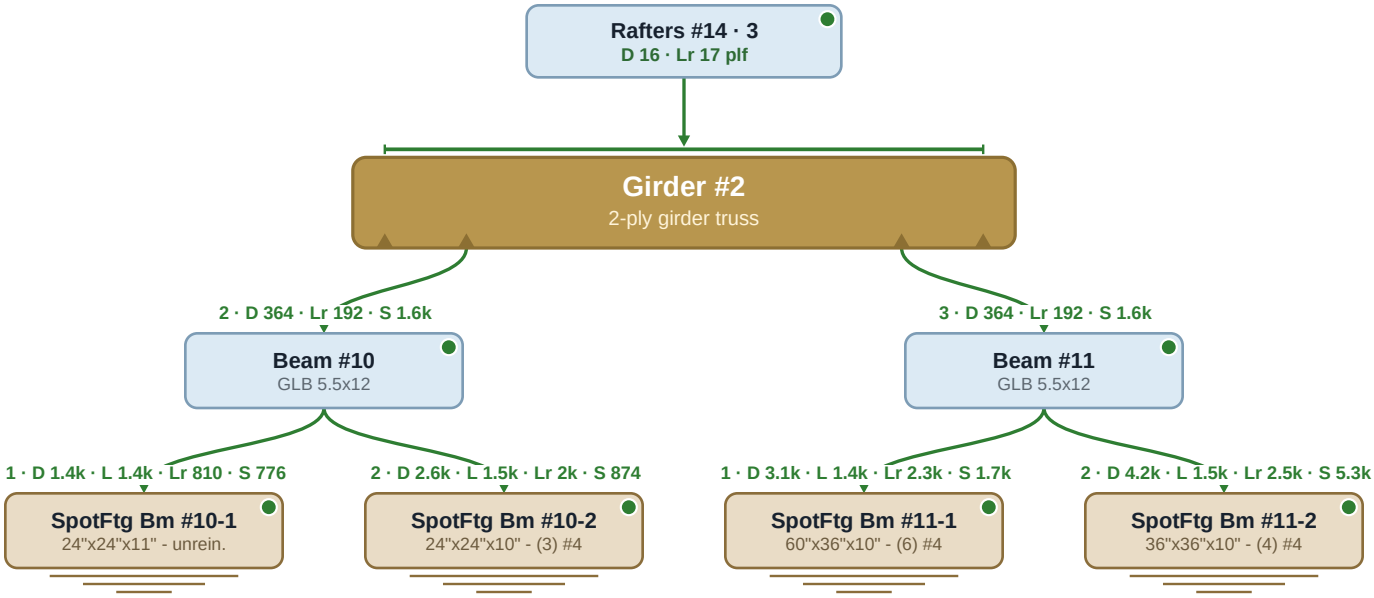

Girder #3 | 2-ply girder truss

ON PLAN: A3 Roof 1st PASS

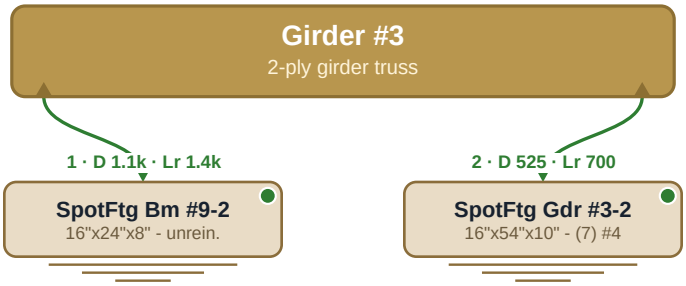

Header #1 | (2) 2x10

ON PLAN: A3 Roof 1st

PASS

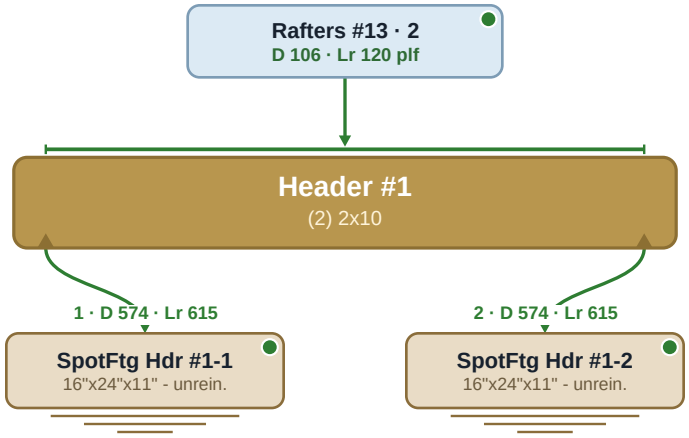

Header #2 | 4x8

ON PLAN: A3 Roof 1st

PASS

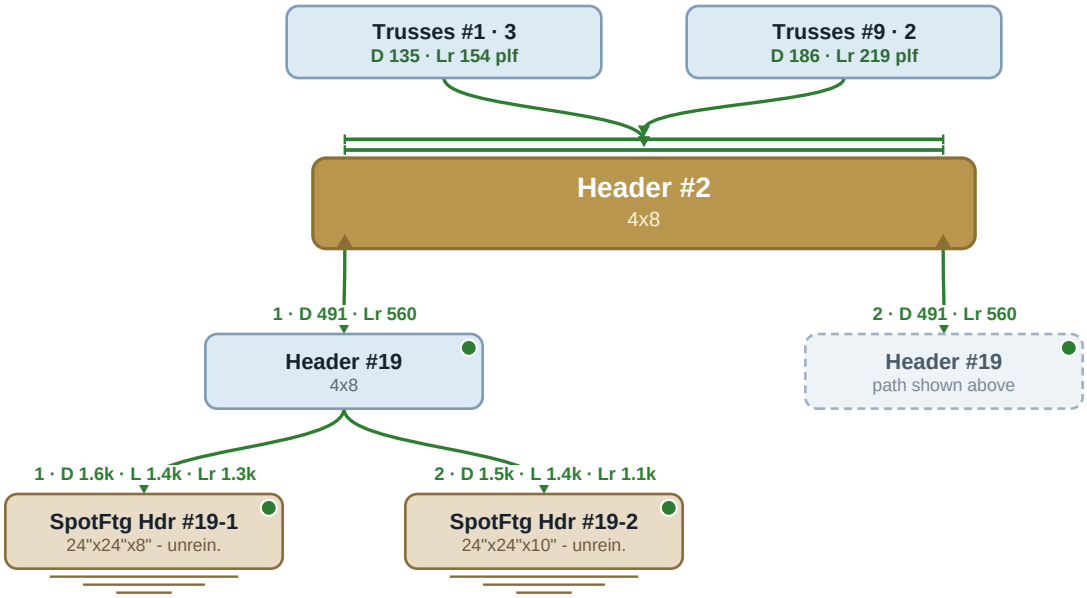

Header #3 | 4x10

ON PLAN: A3 Roof 1st PASS

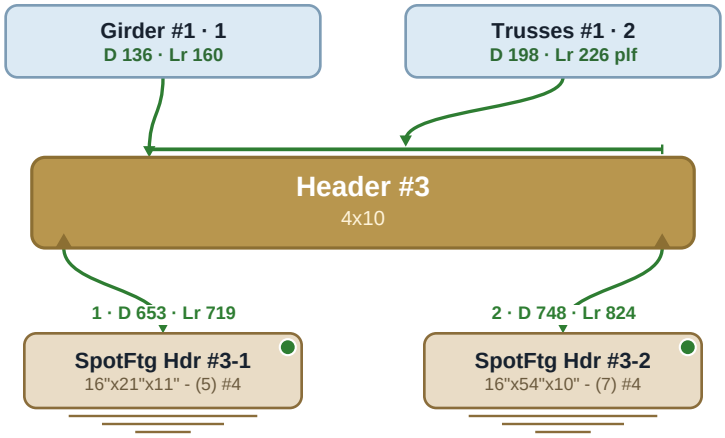

Header #4 | 4x8

ON PLAN: A3 Roof 1st PASS

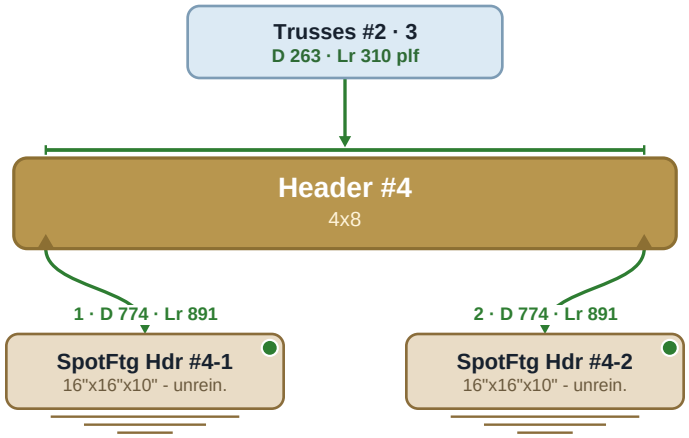

Header #5 | 4x8

ON PLAN: A3 Roof 1st

PASS

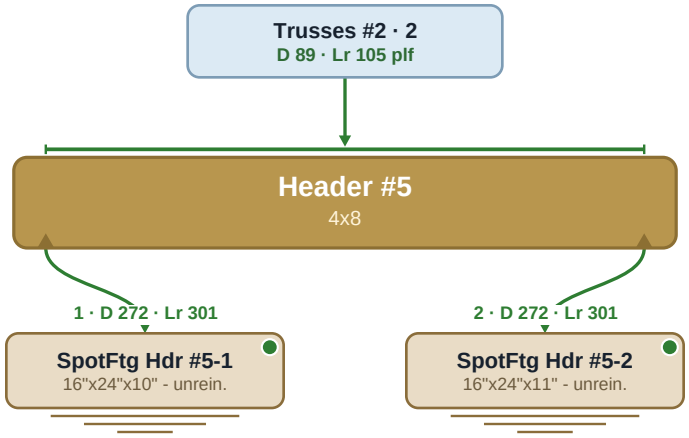

Header #6 | 4x8

ON PLAN: A3 Roof 1st

PASS

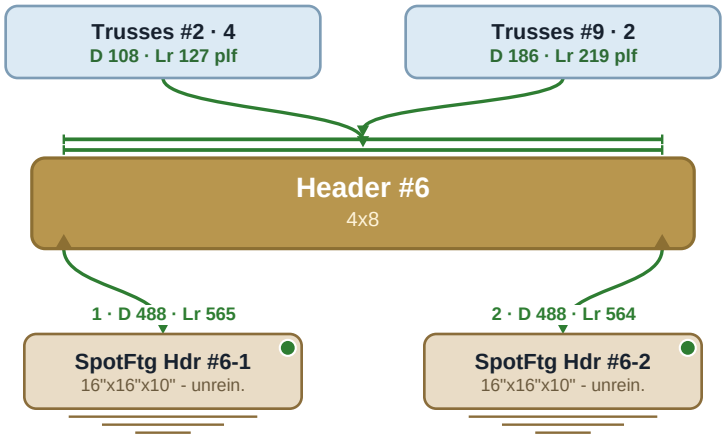

Header #7 | 4x10

ON PLAN: A3 Roof 1st

PASS

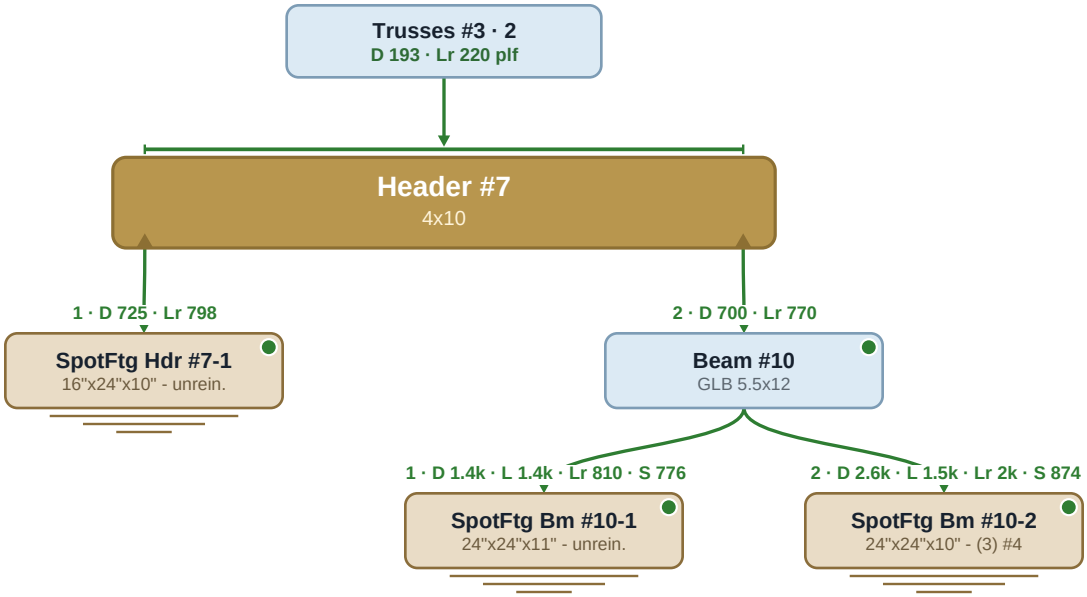

Header #8 | 4x10

ON PLAN: A3 Roof 1st

PASS

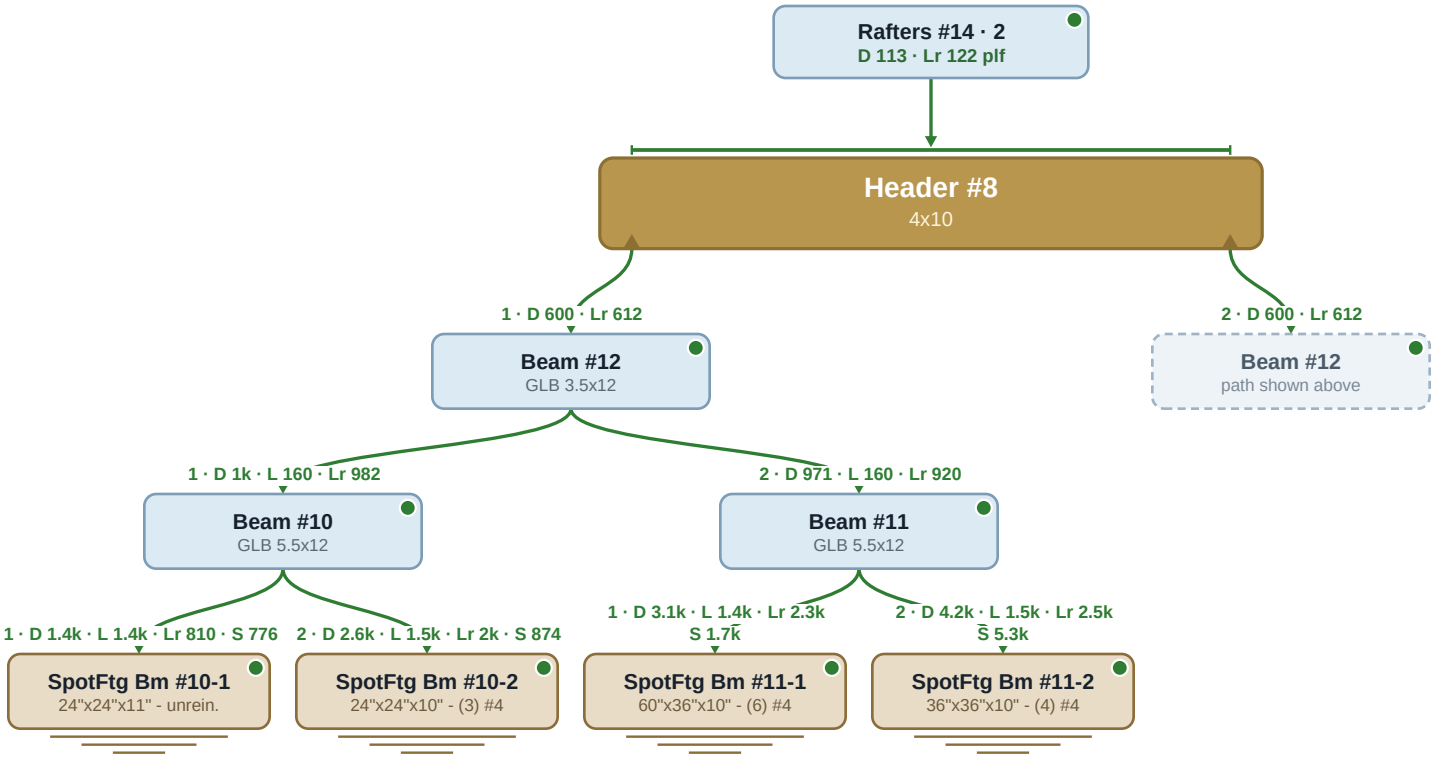

Header #9 | (3) 2x12

ON PLAN: A3 Roof 1st PASS

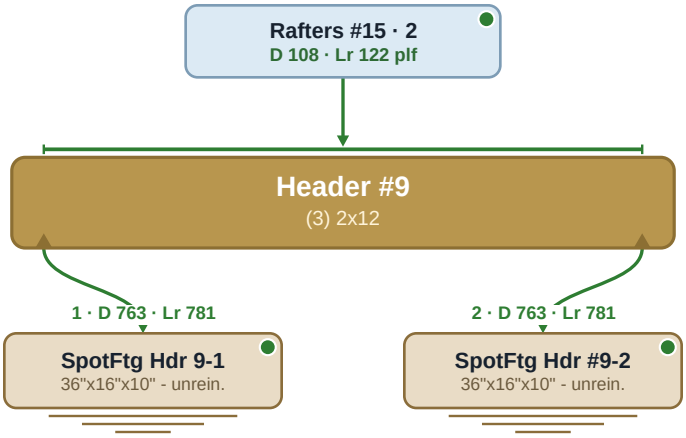

Header #10 | (3) 2x12

ON PLAN: A3 Roof 1st PASS

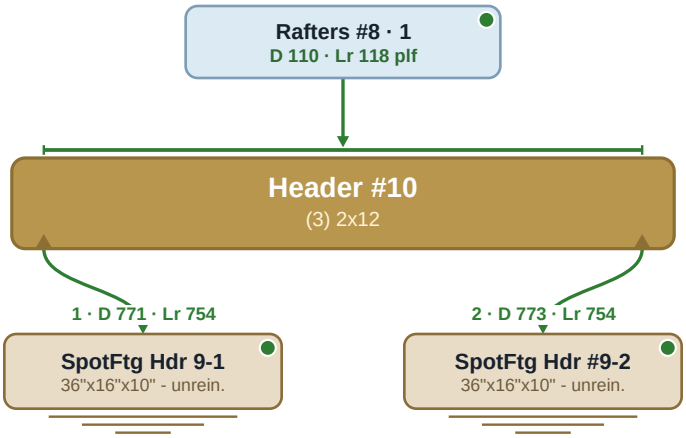

Header #11 | 4x10

ON PLAN: A3 Roof 1st

PASS

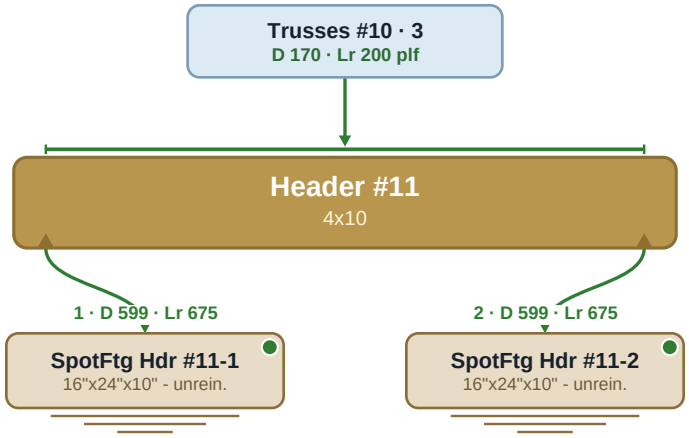

Header #12 | 4x8

ON PLAN: A3 Roof 1st

PASS

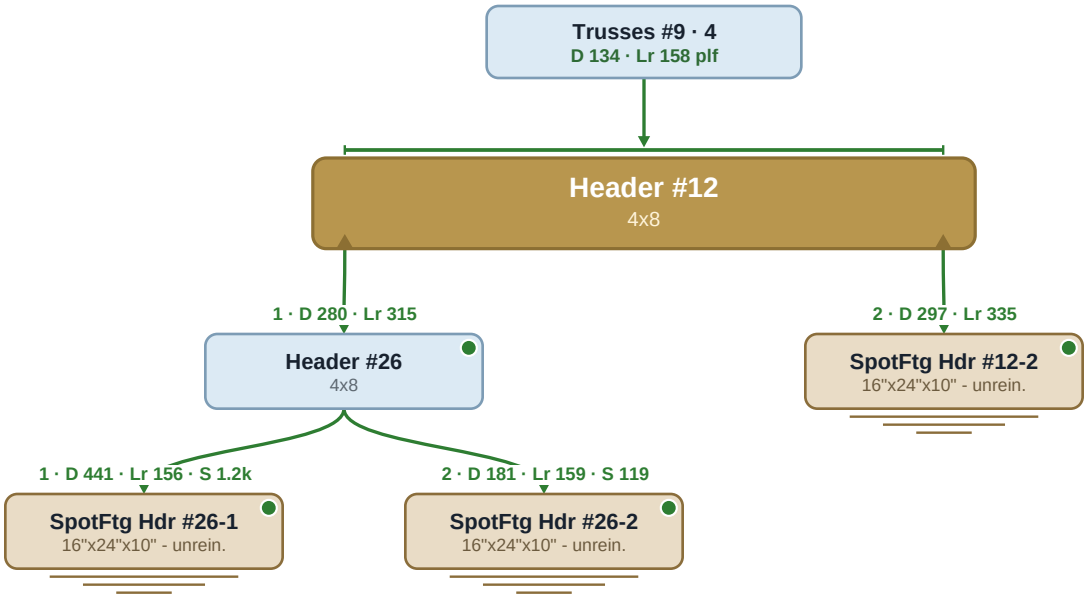

Header #13 | 4x10

ON PLAN: A3 Roof 1st

PASS

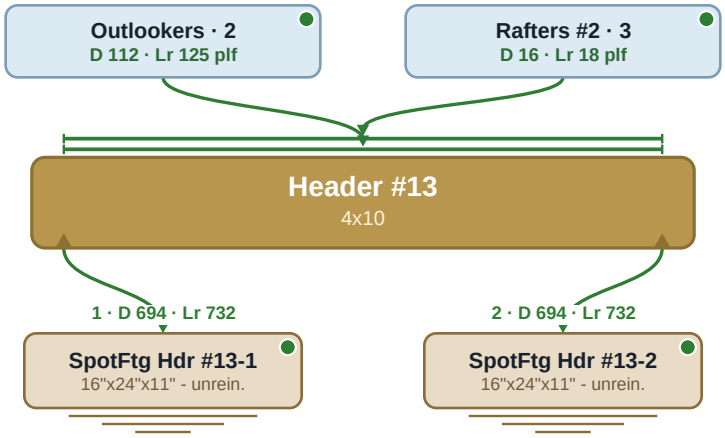

Header #14 | (2) LVL 1.75x9.25

ON PLAN: A3 Roof 1st

PASS

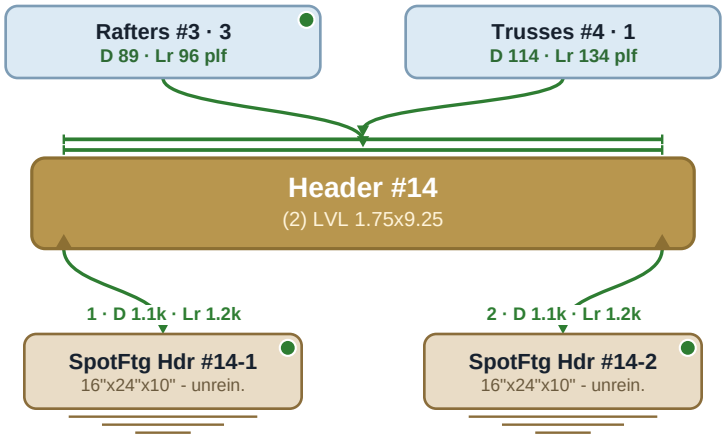

Header #15 | 4x8

ON PLAN: A3 Roof 1st

PASS

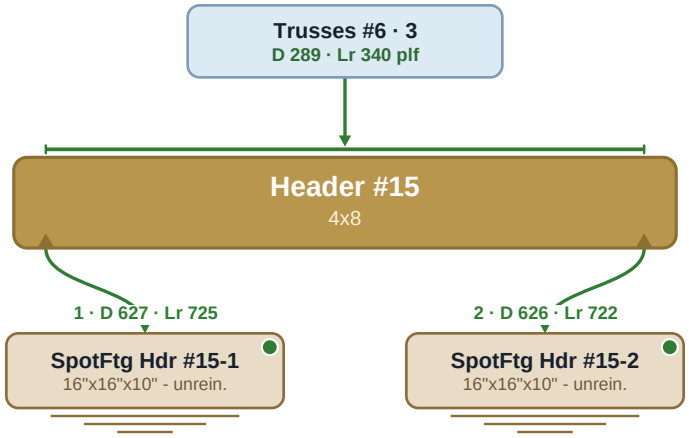

Header #16 | (2) LVL 1.75x11.875

ON PLAN: A3 Roof 1st

PASS

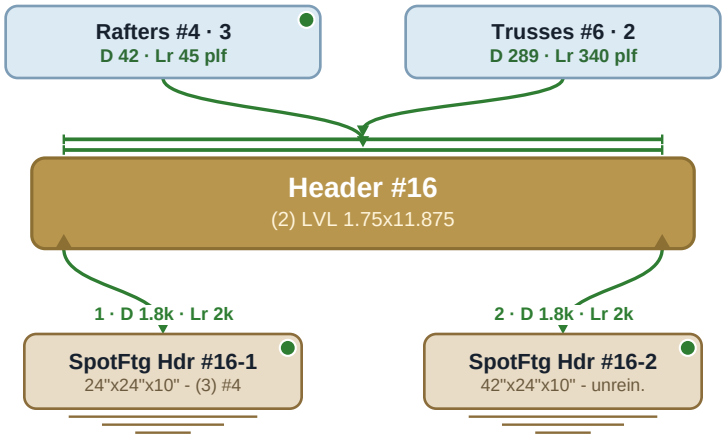

Header #17 | (2) 2x12

ON PLAN: A3 Roof 1st

PASS

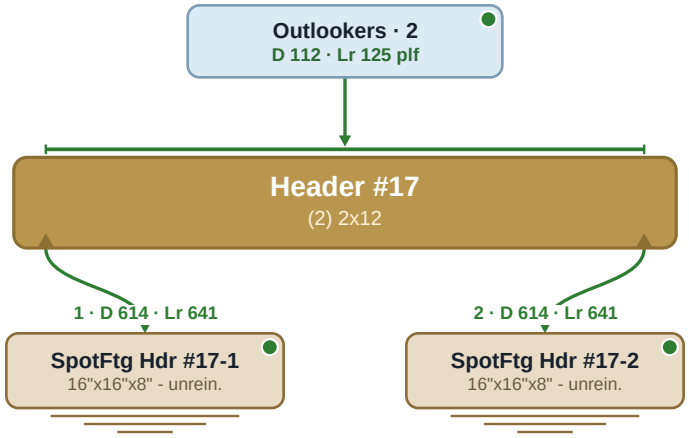

Header #18 | (2) LVL 1.75x11.875

PASS

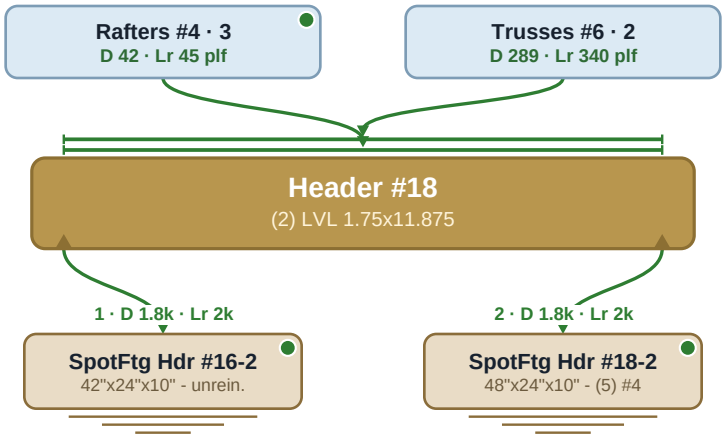

Header #19 | 4x8

ON PLAN: A2 Floor 1st

PASS

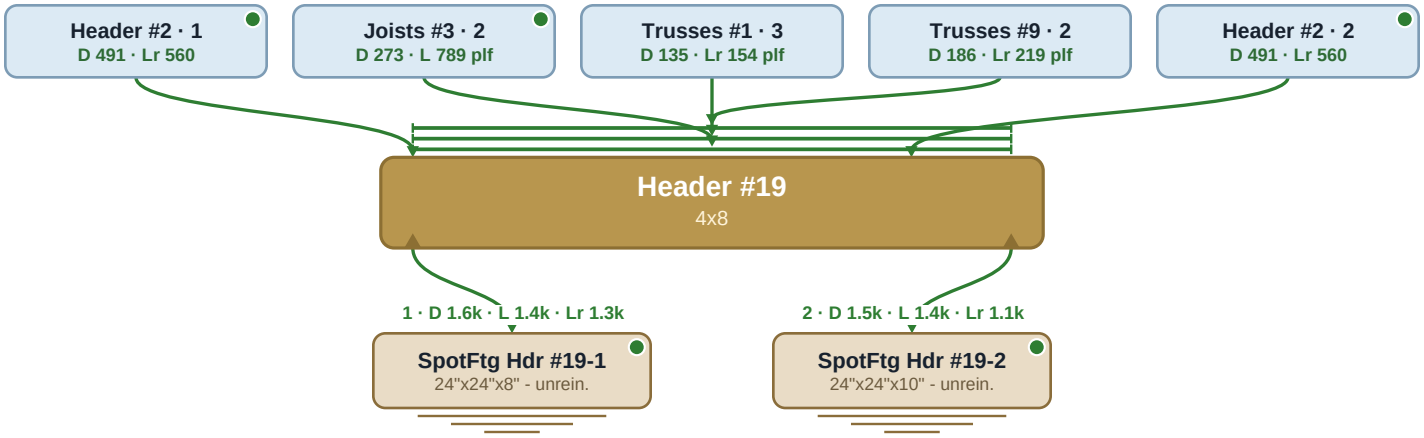

Header #20 | 4x8

ON PLAN: A2 Floor 1st

PASS

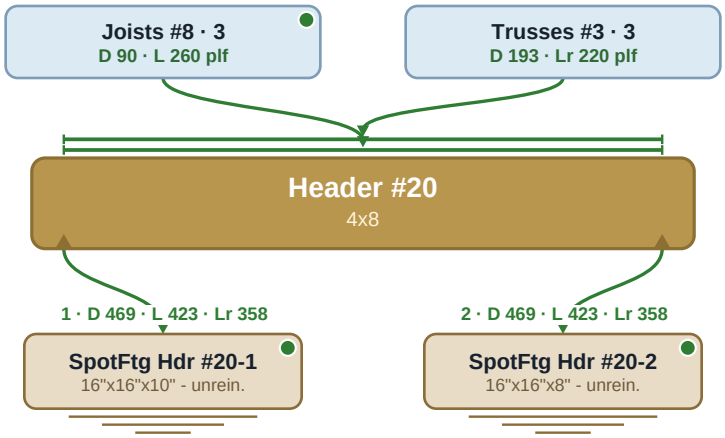

Header #21 | (3) LVL 1.75x9.25

ON PLAN: A2 Floor 1st

PASS

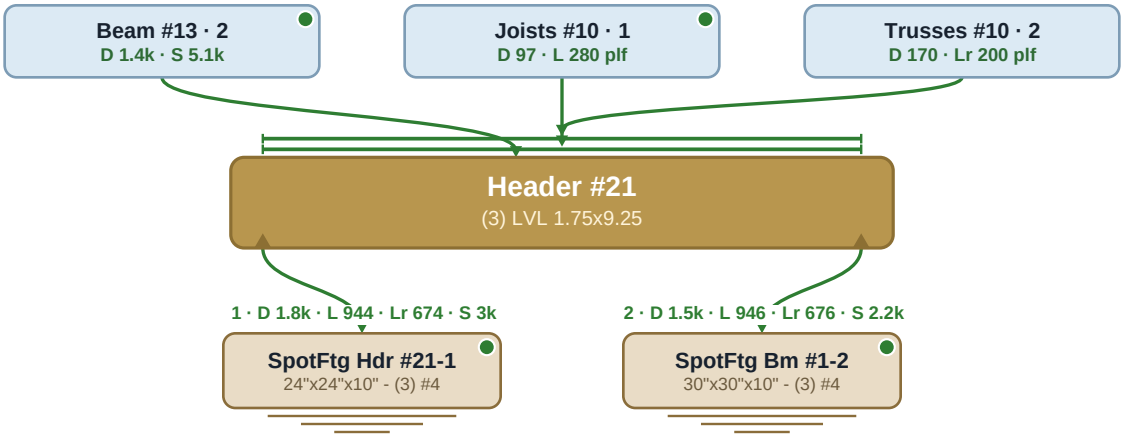

Header #22 | (3) 2x12

ON PLAN: A2 Floor 1st

PASS

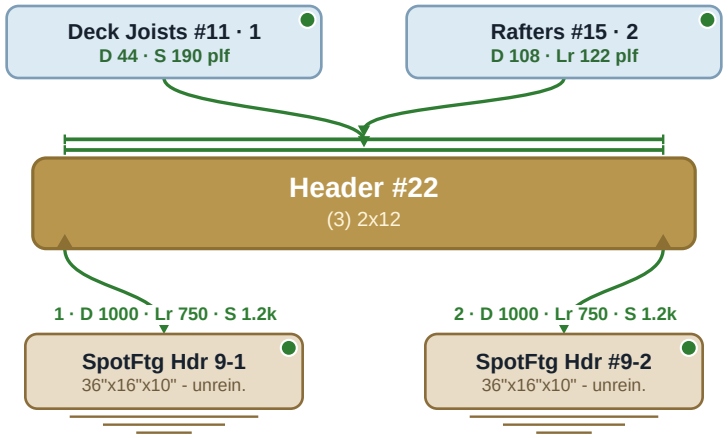

Header #23 | (3) 2x12

ON PLAN: A2 Floor 1st PASS

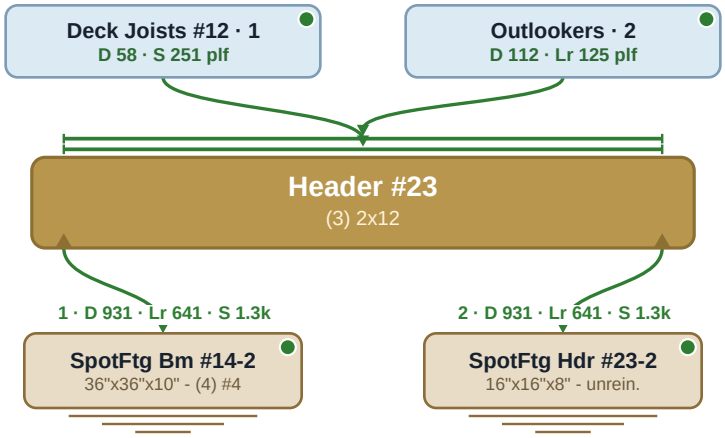

Header #24 | 4x10

ON PLAN: A2 Floor 1st PASS

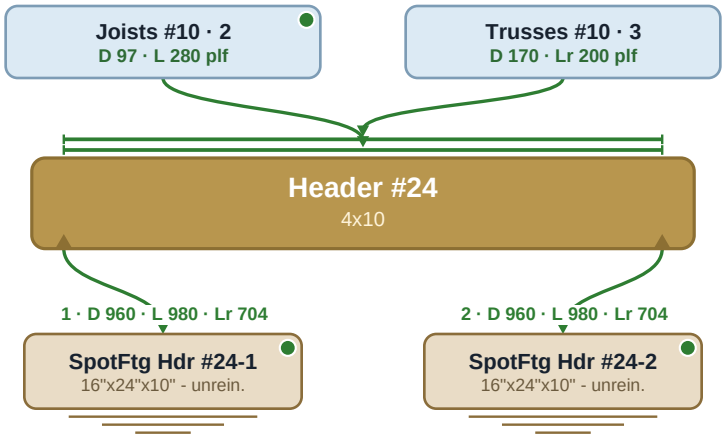

Header #25 | 4x8

ON PLAN: A2 Floor 1st

PASS

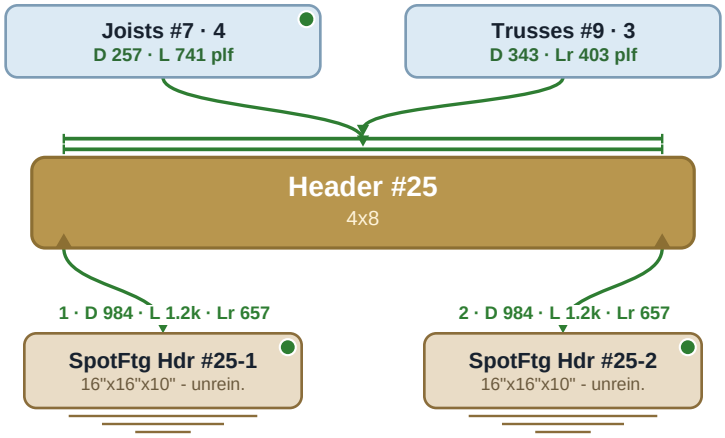

Header #26 | 4x8

ON PLAN: A2 Floor 1st

PASS

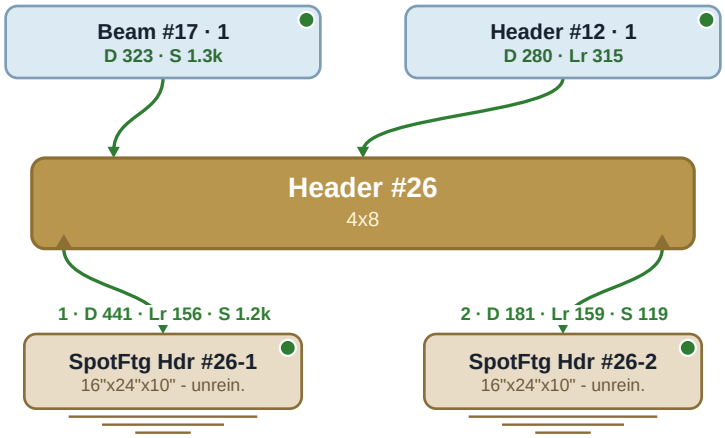

Gold = beam/header | Brown = foundation | Slate = bearing wall (marked) | Yellow = needs verification | Red = dead end / circular
Boxed amber reaction = UPLIFT (negative) | Click a member/box for its section or calc sheet; ON PLAN jumps to the plan callout

Beam #1

(1) 5 1/2" x 15" 24F-1.8E 24F-V4 DF/DF Glulam

Level: Roof | Member type: Beam (roof loads) | Length: 19' | 2018 IRC | 2018 NDS | ASD

PASSED

Controls: Moment 35% used

Section adequacy 65.1% (capacity to spare)

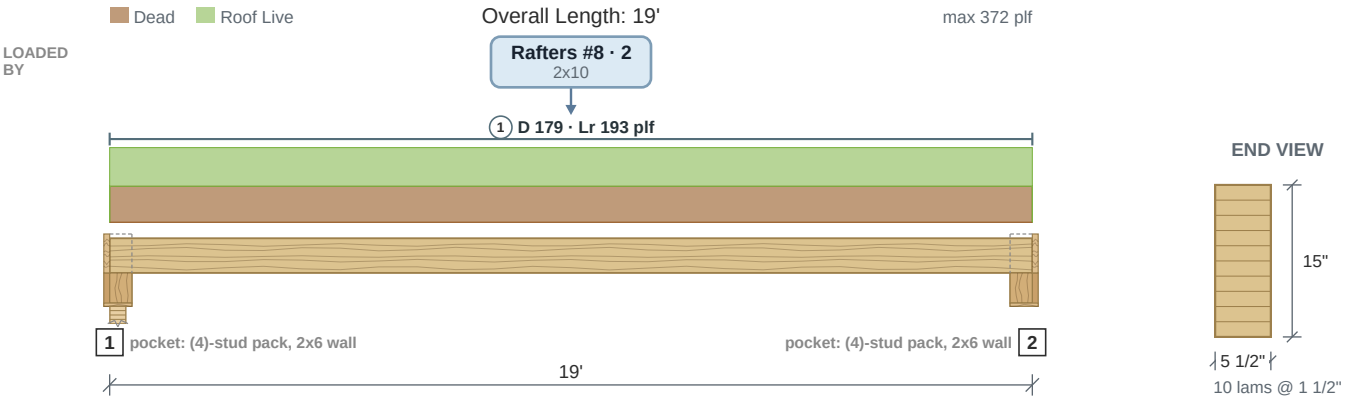

Drawing is conceptual. Locations are measured from the left end of the member; all dimensions are horizontal.

Design Results	Actual @ Location	Allowed	Result	LDF	Load Combination
Member Reaction (lbs)	3,712 @ 0	19,662 (5 1/2")	Passed (19% used)	--	
Plate Bearing (psi)	123 @ 0	668 (2x6 wall, DF-L #2)	Passed (18% used)	--	
Shear (lbs)	3,134 @ 1' 5 3/4"	18,216	Passed (17% used)	1.25	D+Lr
Moment (Ft-lbs)	17,634 @ 9' 6"	50,574	Passed (35% used)	1.25	D+Lr
Live Load Defl. (in)	0.203 @ 9' 6"	0.95	Passed (L/1,123)	--	Lr
Total Load Defl. (in)	0.412 @ 9' 6"	1.267	Passed (L/554)	--	D+Lr
Stud pack (lbs)	3,712 @ 0	26,676	Passed (14% used)	--	

- Deflection criteria: roof live or snow alone L/240 (IRC Table R301.7); dead plus live L/180 (this member's own limit).
- Bending adjustment factors: CD = 1.25, CV = 0.981, CL = 1.00 (D+Lr).
- Beam stability: each moment checked against the bracing of its compression edge (CL = 1.00 where braced).
- Unbalanced glulam layup: install with the tension laminations at the bottom, proper side up as marked by the manufacturer.
- Member self weight of 18.8 plf is included.
- Calculations per NDS 2018, ASD, every load combination with its own load duration factor.

	Bearing Length		Loads to Supports (lbs)			
Supports	Provided	Required	Dead	Roof Live	Total	Load goes to
1 @ 0	5 1/2"	1 1/16"	1,880	1,832	**3,712**	Beam #11 (in a beam pocket in a 2x6 stud wall 10 ft tall (the default), on a (4)-stud pack -- no post cap)
2 @ 19'	5 1/2"	1 1/16"	1,880	1,832	**3,712**	SpotFtg Bm #1-2 (in a beam pocket in a 2x6 stud wall 10 ft tall (the default), on a (4)-stud pack -- no post cap)

Total = the governing ASD combination at that support ("up": the governing uplift, where another combination lifts it); the category columns are service loads.

Lateral Bracing	Bracing Intervals	Comments
Top Edge (Lu)	continuous	braced by the sheathing
Bottom Edge (Lu)	19' o/c	used for C_L only where the bottom edge is in compression

Vertical Loads	Location	Trib. Width	Dead (0.90)	Roof Live (1.25)	Comments
0 - Self Weight (PLF)	0 to 19'	N/A	18.8	--	
1 - Uniform (PLF)	0 to 19'	N/A	179.1	192.9	Linked from: Rafters #8, Support 2

Shear, Moment and Deflection

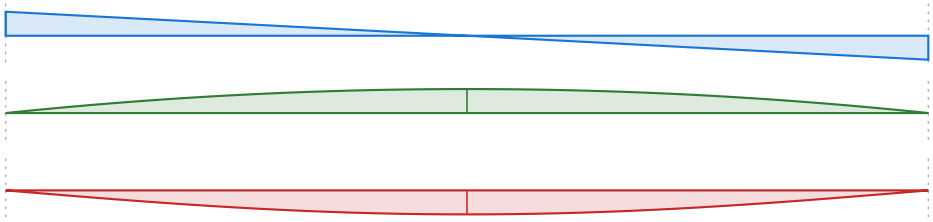

Shear (lbs)
D+Lr
max 3,712 @ 0

Moment (ft-lbs)
D+Lr
max 17,634 @ 9' 6"

Deflection (in)
D+Lr
0.412 in down @ 9' 6"
limit 1.267 in on the span

Beam #2

PASSED

(1) 5 1/2" x 21" 24F-1.8E 24F-V4 DF/DF Glulam

Level: Roof | Member type: Beam (roof loads) | Length: 21' | 2018 IRC | 2018 NDS | ASD

Controls: Post in the wall 64% used
Section adequacy 36.2% (capacity to spare)

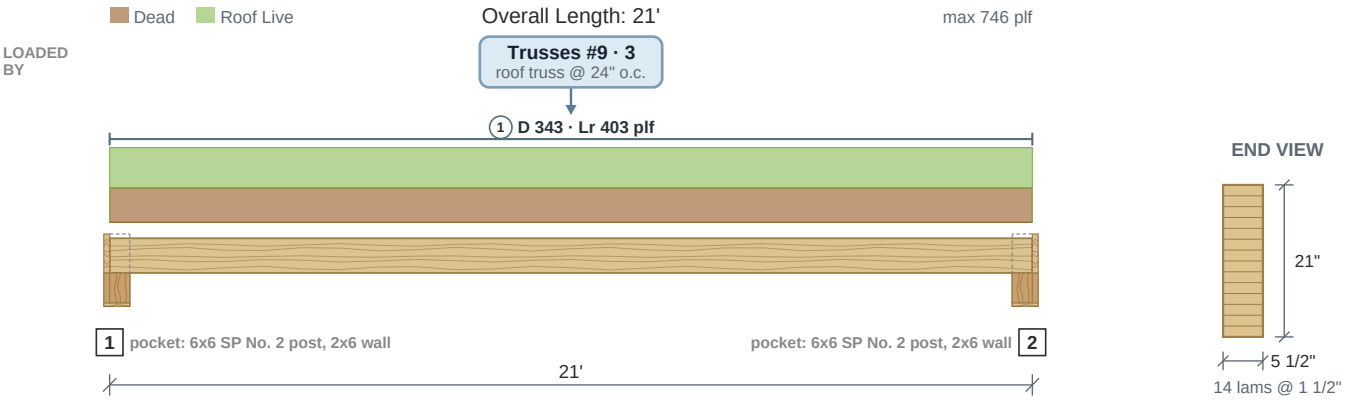

Drawing is conceptual. Locations are measured from the left end of the member; all dimensions are horizontal.

Design Results	Actual @ Location	Allowed	Result	LDF	Load Combination
Member Reaction (lbs)	8,114 @ 0	19,662 (5 1/2")	Passed (41% used)	--	
Plate Bearing (psi)	268 @ 0	668 (2x6 wall, DF-L #2)	Passed (40% used)	--	
Shear (lbs)	6,585 @ 19' 1/4"	25,502	Passed (26% used)	1.25	D+Lr
Moment (Ft-lbs)	42,598 @ 10' 6"	94,891	Passed (45% used)	1.25	D+Lr
Live Load Defl. (in)	0.231 @ 10' 6"	1.05	Passed (L/1,090)	--	Lr
Total Load Defl. (in)	0.443 @ 10' 6"	1.4	Passed (L/569)	--	D+Lr
Post on the bottom plate (psi)	268 @ 0	668	Passed (40% used)	--	
Post in the wall (lbs)	8,114 @ 0	12,725	Passed (64% used)	--	

- Deflection criteria: roof live or snow alone L/240 (IRC Table R301.7); dead plus live L/180 (this member's own limit).
- Bending adjustment factors: CD = 1.25, CV = 0.939, CL = 1.00 (D+Lr).
- Beam stability: each moment checked against the bracing of its compression edge (CL = 1.00 where braced).
- Unbalanced glulam layup: install with the tension laminations at the bottom, proper side up as marked by the manufacturer.
- Member self weight of 26.3 plf is included.
- Calculations per NDS 2018, ASD, every load combination with its own load duration factor.

	Bearing Length		Loads to Supports (lbs)			
Supports	**Provided**	**Required**	**Dead**	**Roof Live**	**Total**	**Load goes to**
1 @ 0	5 1/2"	2 1/4"	3,877	4,237	**8,114**	SpotFtg Bm #2-1 (in a beam pocket in a 2x6 stud wall 10 ft tall (the default), on a 6x6 SP No. 2 post -- no post cap)
2 @ 21'	5 1/2"	2 1/4"	3,877	4,237	**8,114**	SpotFtg Bm #2-2 (in a beam pocket in a 2x6 stud wall 10 ft tall (the default), on a 6x6 SP No. 2 post -- no post cap)

Total = the governing ASD combination at that support ("up": the governing uplift, where another combination lifts it); the category columns are service loads.

Lateral Bracing	Bracing Intervals	Comments
Top Edge (Lu)	continuous	braced by the sheathing
Bottom Edge (Lu)	21' o/c	used for C_L only where the bottom edge is in compression

Vertical Loads	Location	Trib. Width	Dead (0.90)	Roof Live (1.25)	Comments
0 - Self Weight (PLF)	0 to 21'	N/A	26.3	--	
1 - Uniform (PLF)	0 to 21'	N/A	343	403.5	Linked from: Trusses #9, Support 3

Shear, Moment and Deflection

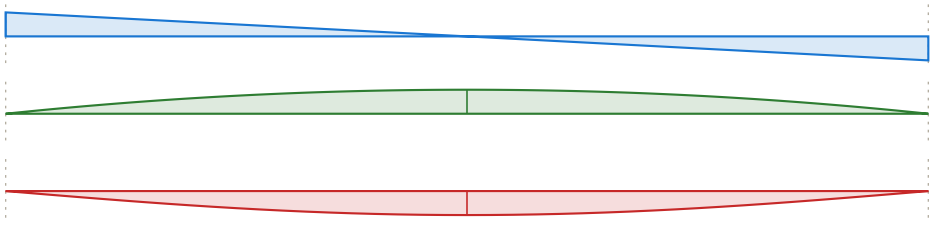

Shear (lbs)
D+Lr
max 8,114 @ 0

Moment (ft-lbs)
D+Lr
max 42,598 @ 10' 6"

Deflection (in)
D+Lr
0.443 in down @ 10' 6"
limit 1.4 in on the span

Beam #3

(1) 6 3/4" x 15" 24F-1.8E 24F-V4 DF/DF Glulam

Level: Roof | Member type: Beam (roof loads) | Length: 18' 6" | 2018 IRC | 2018 NDS | ASD

PASSED

Controls: Moment 21% used

Section adequacy 79.4% (capacity to spare)

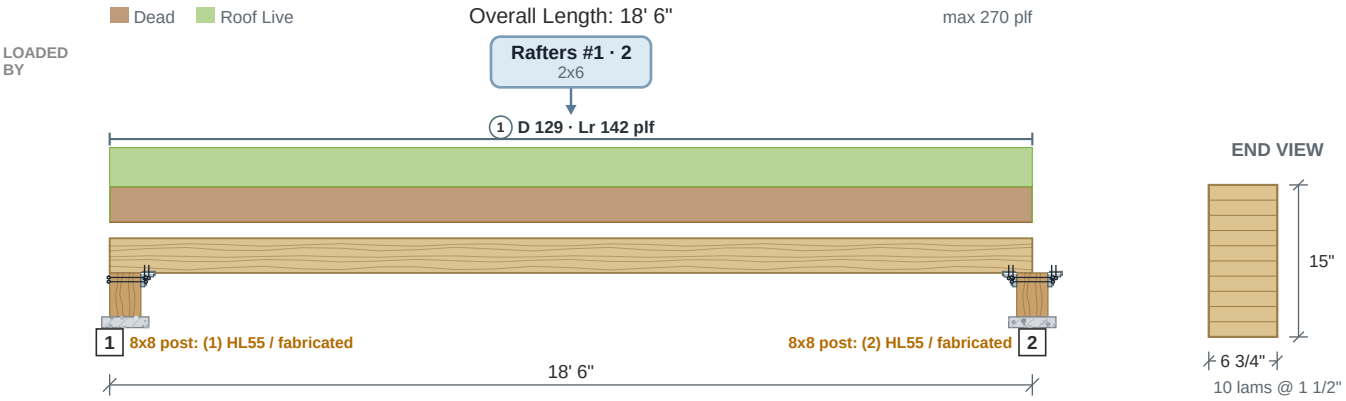

Drawing is conceptual. Locations are measured from the left end of the member; all dimensions are horizontal.

Design Results	Actual @ Location	Allowed	Result	LDF	Load Combination
Member Reaction (lbs)	2,715 @ 18' 6"	16,453 (3 3/4")	Passed (17% used)	--	
Shear (lbs)	2,256 @ 1' 6 3/4"	22,356	Passed (10% used)	1.25	D+Lr
Moment (Ft-lbs)	12,557 @ 9' 3"	60,971	Passed (21% used)	1.25	D+Lr
Live Load Defl. (in)	0.109 @ 9' 3"	0.925	Passed (L/2,032)	--	Lr
Total Load Defl. (in)	0.226 @ 9' 3"	1.233	Passed (L/981)	--	D+Lr

- Deflection criteria: roof live or snow alone L/240 (IRC Table R301.7); dead plus live L/180 (this member's own limit).
- Bending adjustment factors: CD = 1.25, CV = 0.964, CL = 1.00 (D+Lr).
- Beam stability: each moment checked against the bracing of its compression edge (CL = 1.00 where braced).
- Unbalanced glulam layup: install with the tension laminations at the bottom, proper side up as marked by the manufacturer.
- Member self weight of 23.1 plf is included.
- Calculations per NDS 2018, ASD, every load combination with its own load duration factor.

	Bearing Length		Loads to Supports (lbs)			
Supports	Provided	Required	Dead	Roof Live	Total	Load goes to
1 @ 0	7 1/2" seat	5/8"	1,405	1,310	**2,715**	SpotFtg Bm #3-1 (8x8 post (10' assumed, 93%): (1) HL55 / fabricated)
2 @ 18' 6"	3 3/4" seat	5/8"	1,405	1,310	**2,715**	SpotFtg Bm #3-2 (8x8 post (10' assumed, 89%): (2) HL55 / fabricated)

Total = the governing ASD combination at that support ("up": the governing uplift, where another combination lifts it); the category columns are service loads.

Lateral Bracing	Bracing Intervals	Comments
Top Edge (Lu)	continuous	braced by the sheathing
Bottom Edge (Lu)	18' 6" o/c	used for C_L only where the bottom edge is in compression

Vertical Loads	Location	Trib. Width	Dead (0.90)	Roof Live (1.25)	Comments
0 - Self Weight (PLF)	0 to 18' 6"	N/A	23.1	--	
1 - Uniform (PLF)	0 to 18' 6"	N/A	128.8	141.6	Linked from: Rafters #1, Support 2

Shear, Moment and Deflection

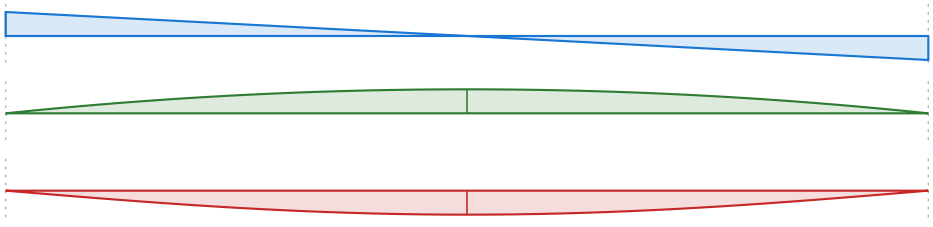

Shear (lbs)
D+Lr
max 2,715 @ 0

Moment (ft-lbs)
D+Lr
max 12,556 @ 9' 3"

Deflection (in)
D+Lr
0.226 in down @ 9' 3"
limit 1.233 in on the span

Beam #4

PASSED

(1) 6 3/4" x 15" 24F-1.8E 24F-V4 DF/DF Glulam

Level: Roof | Member type: Beam (roof loads) | Length: 13' 6" | 2018 IRC | 2018 NDS | ASD

Controls: Bearing 11% used
Section adequacy 89.5% (capacity to spare)

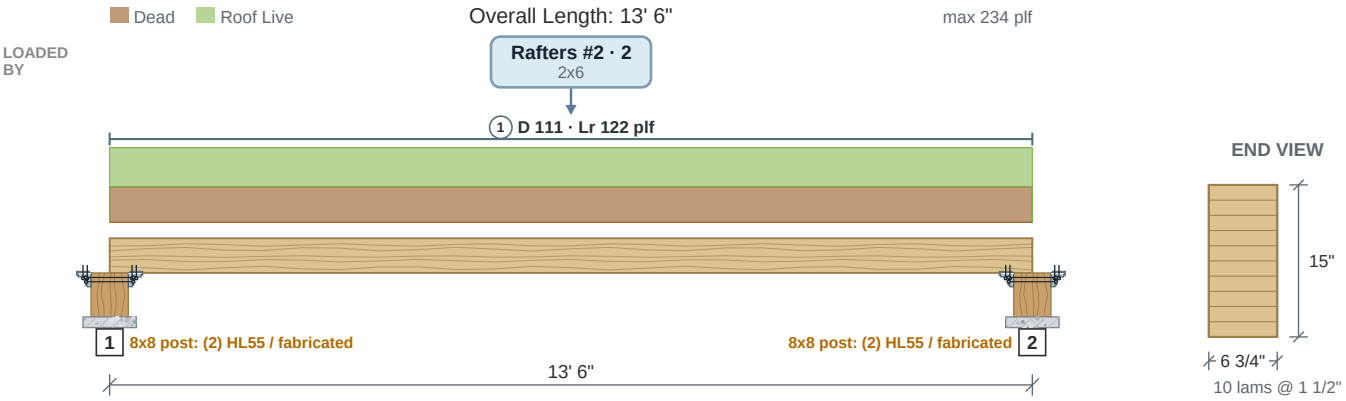

Drawing is conceptual. Locations are measured from the left end of the member; all dimensions are horizontal.

Design Results	Actual @ Location	Allowed	Result	LDF	Load Combination
Member Reaction (lbs)	1,734 @ 0	16,453 (3 3/4")	Passed (11% used)	--	
Shear (lbs)	1,333 @ 1' 6 3/4"	22,356	Passed (6% used)	1.25	D+Lr
Moment (Ft-lbs)	5,854 @ 6' 9"	62,923	Passed (9% used)	1.25	D+Lr
Live Load Defl. (in)	0.027 @ 6' 9"	0.675	Passed (L/6,047)	--	Lr
Total Load Defl. (in)	0.056 @ 6' 9"	0.9	Passed (L/2,883)	--	D+Lr

- Deflection criteria: roof live or snow alone L/240 (IRC Table R301.7); dead plus live L/180 (this member's own limit).
- Bending adjustment factors: CD = 1.25, CV = 0.994, CL = 1.00 (D+Lr).
- Beam stability: each moment checked against the bracing of its compression edge (CL = 1.00 where braced).
- Unbalanced glulam layup: install with the tension laminations at the bottom, proper side up as marked by the manufacturer.
- Member self weight of 23.1 plf is included.
- Calculations per NDS 2018, ASD, every load combination with its own load duration factor.

	Bearing Length		Loads to Supports (lbs)			
Supports	**Provided**	**Required**	**Dead**	**Roof Live**	**Total**	**Load goes to**
1 @ 0	3 3/4" seat	3/8"	908	827	**1,735**	SpotFtg Bm #3-2 (8x8 post (10' assumed, 89%): (2) HL55 / fabricated)
2 @ 13' 6"	3 3/4" seat	3/8"	908	827	**1,735**	SpotFtg Bm #4-2 (8x8 post (10' assumed, 90%): (2) HL55 / fabricated)

Total = the governing ASD combination at that support ("up": the governing uplift, where another combination lifts it); the category columns are service loads.

Lateral Bracing	Bracing Intervals	Comments
Top Edge (Lu)	continuous	braced by the sheathing
Bottom Edge (Lu)	13' 6" o/c	used for C_L only where the bottom edge is in compression

Vertical Loads	Location	Trib. Width	Dead (0.90)	Roof Live (1.25)	Comments
0 - Self Weight (PLF)	0 to 13' 6"	N/A	23.1	--	
1 - Uniform (PLF)	0 to 13' 6"	N/A	111.4	122.5	Linked from: Rafters #2, Support 2

Shear, Moment and Deflection

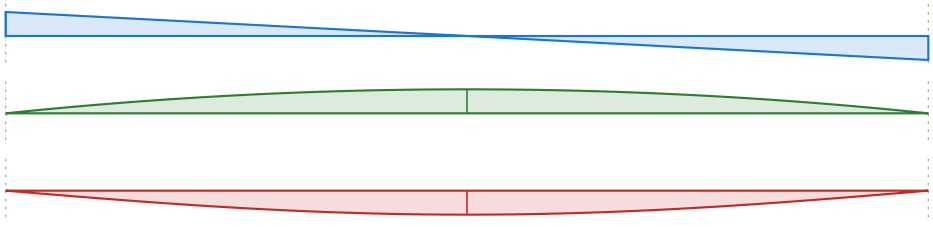

Shear (lbs)
D+Lr
max 1,735 @ 0

Moment (ft-lbs)
D+Lr
max 5,854 @ 6' 9"

Deflection (in)
D+Lr
0.056 in down @ 6' 9"
limit 0.9 in on the span

Beam #5

(1) 6 3/4" x 15" 24F-1.8E 24F-V4 DF/DF Glulam

Level: Roof | Member type: Beam (roof loads) | Length: 13' 6" | 2018 IRC | 2018 NDS | ASD

PASSED

Controls: Bearing 15% used
Section adequacy 85.4% (capacity to spare)

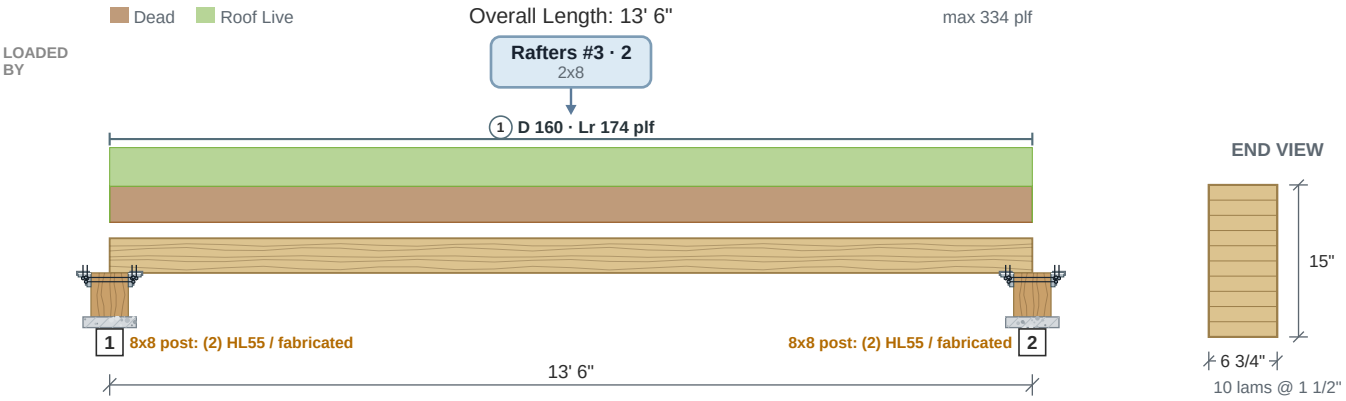

Drawing is conceptual. Locations are measured from the left end of the member; all dimensions are horizontal.

Design Results	Actual @ Location	Allowed	Result	LDF	Load Combination
Member Reaction (lbs)	2,410 @ 0	16,453 (3 3/4")	Passed (15% used)	--	
Shear (lbs)	1,852 @ 1' 6 3/4"	22,356	Passed (8% used)	1.25	D+Lr
Moment (Ft-lbs)	8,136 @ 6' 9"	62,923	Passed (13% used)	1.25	D+Lr
Live Load Defl. (in)	0.038 @ 6' 9"	0.675	Passed (L/4,268)	--	Lr
Total Load Defl. (in)	0.078 @ 6' 9"	0.9	Passed (L/2,074)	--	D+Lr

- Deflection criteria: roof live or snow alone L/240 (IRC Table R301.7); dead plus live L/180 (this member's own limit).
- Bending adjustment factors: CD = 1.25, CV = 0.994, CL = 1.00 (D+Lr).
- Beam stability: each moment checked against the bracing of its compression edge (CL = 1.00 where braced).
- Unbalanced glulam layup: install with the tension laminations at the bottom, proper side up as marked by the manufacturer.
- Member self weight of 23.1 plf is included.
- Calculations per NDS 2018, ASD, every load combination with its own load duration factor.

	Bearing Length		Loads to Supports (lbs)			
Supports	**Provided**	**Required**	**Dead**	**Roof Live**	**Total**	**Load goes to**
1 @ 0	3 3/4" seat	9/16"	1,239	1,172	**2,411**	SpotFtg Bm #4-2 (8x8 post (10' assumed, 90%): (2) HL55 / fabricated)
2 @ 13' 6"	3 3/4" seat	9/16"	1,239	1,172	**2,411**	SpotFtg Bm #5-2 (8x8 post (10' assumed, 79%): (2) HL55 / fabricated)

Total = the governing ASD combination at that support ("up": the governing uplift, where another combination lifts it); the category columns are service loads.

Lateral Bracing	Bracing Intervals	Comments
Top Edge (Lu)	continuous	braced by the sheathing
Bottom Edge (Lu)	13' 6" o/c	used for C_L only where the bottom edge is in compression

Vertical Loads	Location	Trib. Width	Dead (0.90)	Roof Live (1.25)	Comments
0 - Self Weight (PLF)	0 to 13' 6"	N/A	23.1	--	
1 - Uniform (PLF)	0 to 13' 6"	N/A	160.5	173.6	Linked from: Rafters #3, Support 2

Shear, Moment and Deflection

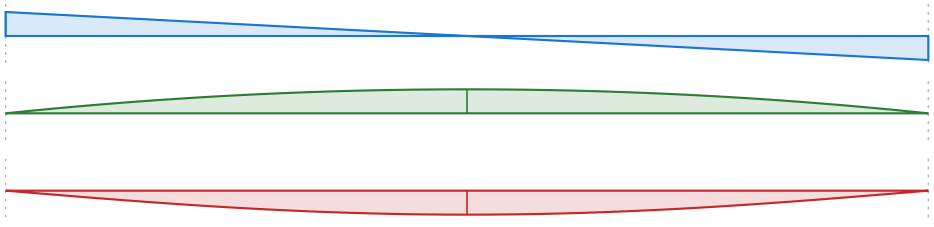

Shear (lbs)
D+Lr
max 2,411 @ 0

Moment (ft-lbs)
D+Lr
max 8,136 @ 6' 9"

Deflection (in)
D+Lr
0.078 in down @ 6' 9"
limit 0.9 in on the span

Beam #6

(1) 6 3/4" x 15" 24F-1.8E 24F-V4 DF/DF Glulam

Level: Roof | Member type: Beam (roof loads) | Length: 30' | 2018 IRC | 2018 NDS | ASD

PASSED

Controls: Deflection 76% used
Section adequacy 23.7% (capacity to spare)

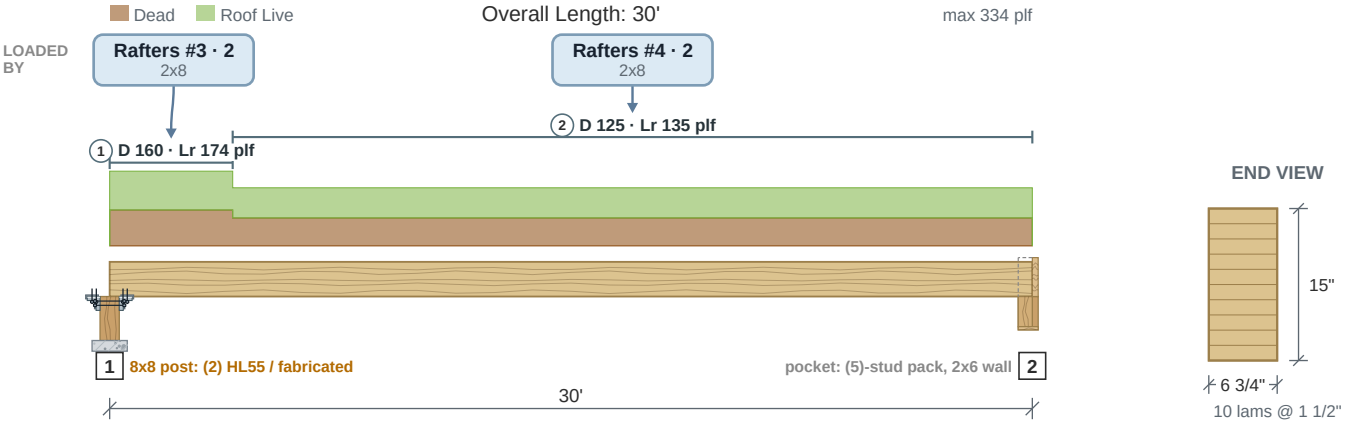

Drawing is conceptual. Locations are measured from the left end of the member; all dimensions are horizontal.

Design Results	Actual @ Location	Allowed	Result	LDF	Load Combination
Member Reaction (lbs)	4,520 @ 0	16,453 (3 3/4")	Passed (27% used)	--	
Plate Bearing (psi)	115 @ 30'	668 (2x6 wall, DF-L #2)	Passed (17% used)	--	
Shear (lbs)	3,962 @ 1' 6 3/4"	22,356	Passed (18% used)	1.25	D+Lr
Moment (Ft-lbs)	32,122 @ 15'	58,094	Passed (55% used)	1.25	D+Lr
Live Load Defl. (in)	0.729 @ 15' 1 11/16"	1.5	Passed (L/494)	--	Lr
Total Load Defl. (in)	1.525 @ 15' 1 11/16"	2	Passed (L/236)	--	D+Lr
Stud pack (lbs)	4,263 @ 30'	33,345	Passed (13% used)	--	

- Deflection criteria: roof live or snow alone L/240 (IRC Table R301.7); dead plus live L/180 (this member's own limit).
- Bending adjustment factors: CD = 1.25, CV = 0.918, CL = 1.00 (D+Lr).
- Beam stability: each moment checked against the bracing of its compression edge (CL = 1.00 where braced).
- Unbalanced glulam layup: install with the tension laminations at the bottom, proper side up as marked by the manufacturer.
- Member self weight of 23.1 plf is included.
- Calculations per NDS 2018, ASD, every load combination with its own load duration factor.

	Bearing Length		Loads to Supports (lbs)			
Supports	Provided	Required	Dead	Roof Live	Total	Load goes to
1 @ 0	3 3/4" seat	1"	2,351	2,169	**4,520**	SpotFtg Bm #5-2 (8x8 post (10' assumed, 79%): (2) HL55 / fabricated)
2 @ 30'	5 1/2"	1"	2,228	2,035	**4,263**	SpotFtg Bm #6-2 (in a beam pocket in a 2x6 stud wall 10 ft tall (the default), on a (5)-stud pack -- no post cap)

Total = the governing ASD combination at that support ("up": the governing uplift, where another combination lifts it); the category columns are service loads.

Lateral Bracing	Bracing Intervals	Comments
Top Edge (Lu)	continuous	braced by the sheathing
Bottom Edge (Lu)	30' o/c	used for C_L only where the bottom edge is in compression

Vertical Loads	Location	Trib. Width	Dead (0.90)	Roof Live (1.25)	Comments
0 - Self Weight (PLF)	0 to 30'	N/A	23.1	--	
1 - Uniform (PLF)	0 to 4'	N/A	160.5	173.6	Linked from: Rafters #3, Support 2
2 - Uniform (PLF)	4' to 30'	N/A	124.8	135	Linked from: Rafters #4, Support 2

Shear, Moment and Deflection

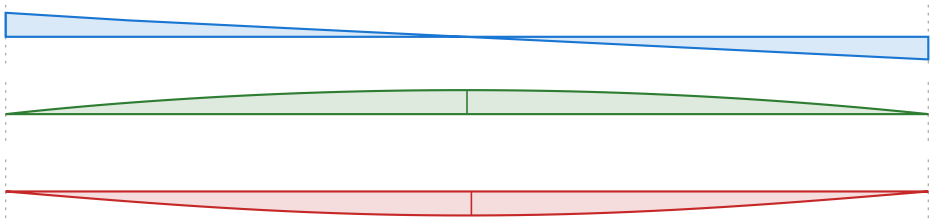

Shear (lbs)
D+Lr
max 4,520 @ 0

Moment (ft-lbs)
D+Lr
max 32,121 @ 15'

Deflection (in)
D+Lr
1.525 in down @ 15' 1 11/16"
limit 2 in on the span

Beam #7

(3) 2x12 SP No. 2 (1 1/2" x 11 1/4")

Level: Roof | Member type: Beam (roof loads) | Length: 14' | 2018 IRC | 2018 NDS | ASD

PASSED

Controls: Moment 82% used

Section adequacy 17.8% (capacity to spare)

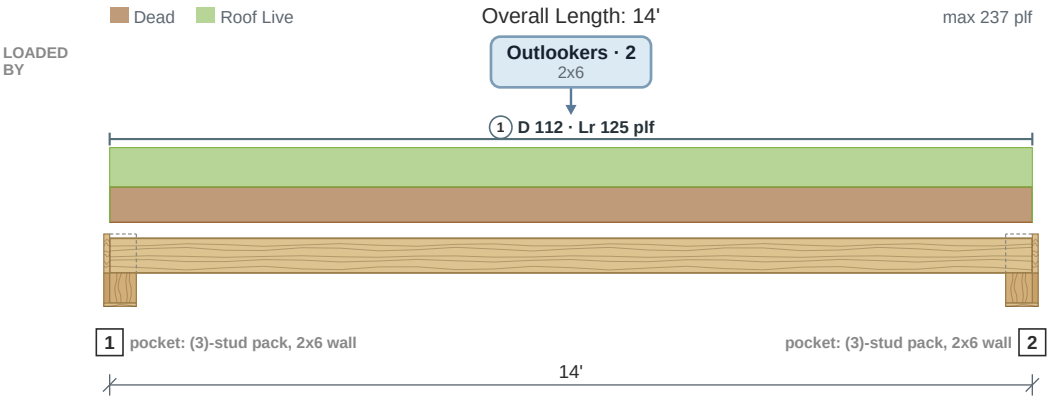

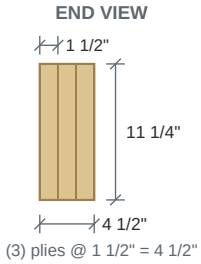

Drawing is conceptual. Locations are measured from the left end of the member; all dimensions are horizontal.

Design Results	Actual @ Location	Allowed	Result	LDF	Load Combination
Member Reaction (lbs)	1,741 @ 0	13,984 (5 1/2")	Passed (12% used)	--	
Plate Bearing (psi)	70 @ 0	668 (2x6 wall, DF-L #2)	Passed (11% used)	--	
Shear (lbs)	1,450 @ 1' 2"	7,384	Passed (20% used)	1.25	D+Lr
Moment (Ft-lbs)	6,092 @ 7'	7,416	Passed (82% used)	1.25	D+Lr
Live Load Defl. (in)	0.145 @ 7'	0.7	Passed (L/1,162)	--	Lr
Total Load Defl. (in)	0.288 @ 7'	0.933	Passed (L/584)	--	D+Lr
Stud pack (lbs)	1,741 @ 0	20,007	Passed (9% used)	--	

- Deflection criteria: roof live or snow alone L/240 (IRC Table R301.7); dead plus live L/180 (this member's own limit).
- Bending adjustment factors: CD = 1.25, CL = 1.00 (D+Lr).
- Beam stability: each moment checked against the bracing of its compression edge (CL = 1.00 where braced).
- Member self weight of 11.5 plf is included.
- Calculations per NDS 2018, ASD, every load combination with its own load duration factor.

	Bearing Length		Loads to Supports (lbs)			
Supports	**Provided**	**Required**	**Dead**	**Roof Live**	**Total**	**Load goes to**
1 @ 0	5 1/2"	11/16"	866	875	**1,741**	SpotFtg Bm #7-1 (in a beam pocket in a 2x6 stud wall 10 ft tall (the default), on a (3)-stud pack -- no post cap)
2 @ 14'	5 1/2"	11/16"	866	875	**1,741**	SpotFtg Bm #7-2 (in a beam pocket in a 2x6 stud wall 10 ft tall (the default), on a (3)-stud pack -- no post cap)

Total = the governing ASD combination at that support ("up": the governing uplift, where another combination lifts it); the category columns are service loads.

Lateral Bracing	Bracing Intervals	Comments
Top Edge (Lu)	continuous	braced by the sheathing
Bottom Edge (Lu)	14' o/c	used for C_L only where the bottom edge is in compression

Vertical Loads	Location	Trib. Width	Dead (0.90)	Roof Live (1.25)	Comments
0 - Self Weight (PLF)	0 to 14'	N/A	11.5	--	
1 - Uniform (PLF)	0 to 14'	N/A	112.1	125	Linked from: Outlookers, Support 2

Shear, Moment and Deflection

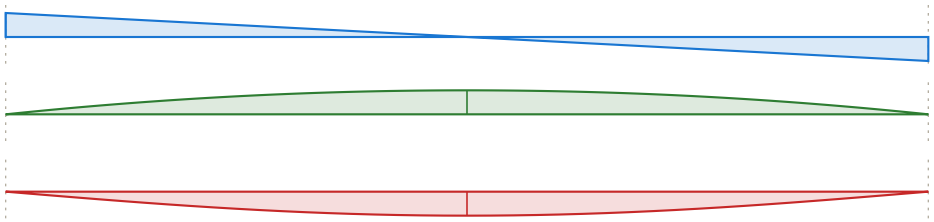

Shear (lbs)
D+Lr
max 1,741 @ 0

Moment (ft-lbs)
D+Lr
max 6,092 @ 7'

Deflection (in)
D+Lr
0.288 in down @ 7'
limit 0.933 in on the span

Beam #8

(1) 5 1/2" x 24" 24F-1.8E 24F-V4 DF/DF Glulam

Level: Roof | Member type: Beam (roof loads) | Length: 28' | 2018 IRC | 2018 NDS | ASD

PASSED

Controls: Moment 33% used
Section adequacy 67% (capacity to spare)

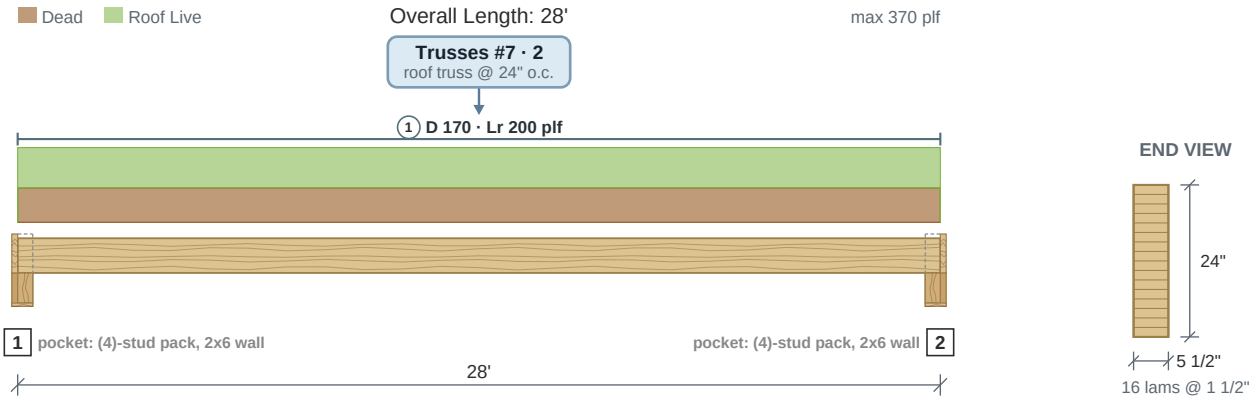

Drawing is conceptual. Locations are measured from the left end of the member; all dimensions are horizontal.

Design Results	Actual @ Location	Allowed	Result	LDF	Load Combination
Member Reaction (lbs)	5,601 @ 0	19,662 (5 1/2")	Passed (28% used)	--	
Plate Bearing (psi)	185 @ 0	668 (2x6 wall, DF-L #2)	Passed (28% used)	--	
Shear (lbs)	4,709 @ 2' 2 3/4"	29,146	Passed (16% used)	1.25	D+Lr
Moment (Ft-lbs)	39,208 @ 14'	118,826	Passed (33% used)	1.25	D+Lr
Live Load Defl. (in)	0.243 @ 14'	1.4	Passed (L/1,385)	--	Lr
Total Load Defl. (in)	0.485 @ 14'	1.867	Passed (L/693)	--	D+Lr
Stud pack (lbs)	5,601 @ 0	26,676	Passed (21% used)	--	

- Deflection criteria: roof live or snow alone L/240 (IRC Table R301.7); dead plus live L/180 (this member's own limit).
- Bending adjustment factors: CD = 1.25, CV = 0.9, CL = 1.00 (D+Lr).
- Beam stability: each moment checked against the bracing of its compression edge (CL = 1.00 where braced).
- Unbalanced glulam layup: install with the tension laminations at the bottom, proper side up as marked by the manufacturer.
- Member self weight of 30.1 plf is included.
- Calculations per NDS 2018, ASD, every load combination with its own load duration factor.

	Bearing Length		Loads to Supports (lbs)			
Supports	**Provided**	**Required**	**Dead**	**Roof Live**	**Total**	**Load goes to**
1 @ 0	5 1/2"	1 9/16"	2,801	2,800	**5,601**	SpotFtg Hdr #18-2 (in a beam pocket in a 2x6 stud wall 10 ft tall (the default), on a (4)-stud pack -- no post cap)
2 @ 28'	5 1/2"	1 9/16"	2,801	2,800	**5,601**	SpotFtg Bm #8-2 (in a beam pocket in a 2x6 stud wall 10 ft tall (the default), on a (4)-stud pack -- no post cap)

Total = the governing ASD combination at that support ("up": the governing uplift, where another combination lifts it); the category columns are service loads.

Lateral Bracing	Bracing Intervals	Comments
Top Edge (Lu)	continuous	braced by the sheathing
Bottom Edge (Lu)	28' o/c	used for C_L only where the bottom edge is in compression

Vertical Loads	Location	Trib. Width	Dead (0.90)	Roof Live (1.25)	Comments
0 - Self Weight (PLF)	0 to 28'	N/A	30.1	--	
1 - Uniform (PLF)	0 to 28'	N/A	170	200	Linked from: Trusses #7, Support 2

Shear, Moment and Deflection

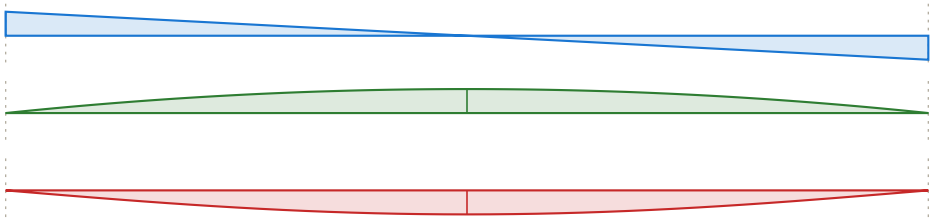

Shear (lbs)
D+Lr
max 5,601 @ 0

Moment (ft-lbs)
D+Lr
max 39,207 @ 14'

Deflection (in)
D+Lr
0.485 in down @ 14'
limit 1.867 in on the span

Beam #9

(1) 4x10 SP No. 2 (3 1/2" x 9 1/4")

Level: Roof | Member type: Beam (roof loads) | Length: 12' | 2018 IRC | 2018 NDS | ASD

PASSED

Controls: Moment 74% used

Section adequacy 26.5% (capacity to spare)

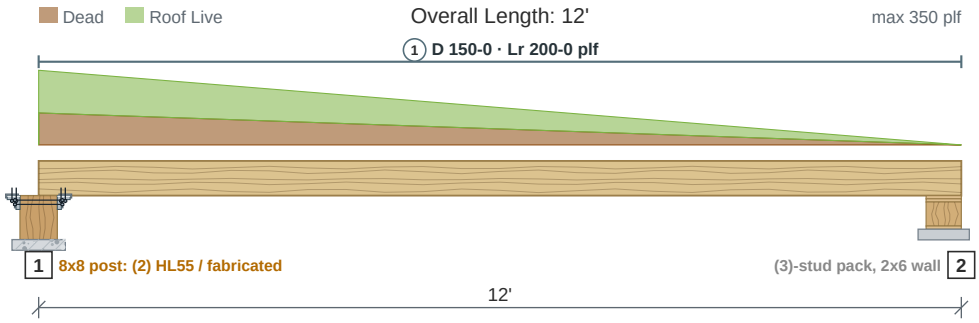

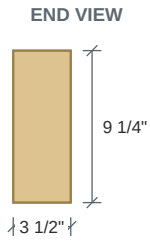

Drawing is conceptual. Locations are measured from the left end of the member; all dimensions are horizontal.

Design Results	Actual @ Location	Allowed	Result	LDF	Load Combination
Member Reaction (lbs)	1,444 @ 0	7,416 (3 3/4")	Passed (19% used)	--	
Plate Bearing (psi)	39 @ 12'	668 (2x6 wall, DF-L #2)	Passed (6% used)	--	
Shear (lbs)	1,074 @ 1' 1"	4,722	Passed (23% used)	1.25	D+Lr
Moment (Ft-lbs)	3,363 @ 5' 1 3/16"	4,575	Passed (74% used)	1.25	D+Lr
Live Load Defl. (in)	0.145 @ 5' 8 3/8"	0.6	Passed (L/996)	--	Lr
Total Load Defl. (in)	0.264 @ 5' 8 3/8"	0.8	Passed (L/546)	--	D+Lr
Stud pack (lbs)	744 @ 12'	20,007	Passed (4% used)	--	

- Deflection criteria: roof live or snow alone L/240 (IRC Table R301.7); dead plus live L/180 (this member's own limit).
- Bending adjustment factors: CD = 1.25, CL = 1.00 (D+Lr).
- Beam stability: each moment checked against the bracing of its compression edge (CL = 1.00 where braced).
- Member self weight of 7.4 plf is included.
- Calculations per NDS 2018, ASD, every load combination with its own load duration factor.

	Bearing Length		Loads to Supports (lbs)			
Supports	**Provided**	**Required**	**Dead**	**Roof Live**	**Total**	**Load goes to**
1 @ 0	3 3/4" seat	3/4"	644	800	**1,444**	SpotFtg Bm #5-2 (8x8 post (10' assumed, 79%): (2) HL55 / fabricated)
2 @ 12'	5 1/2"	3/8"	344	400	**744**	SpotFtg Bm #9-2 (in a 2x6 stud wall 10 ft tall (the default), on a (3)-stud pack -- no post cap)

Total = the governing ASD combination at that support ("up": the governing uplift, where another combination lifts it); the category columns are service loads.

Lateral Bracing	Bracing Intervals	Comments
Top Edge (Lu)	continuous	braced by the sheathing
Bottom Edge (Lu)	12' o/c	used for C_L only where the bottom edge is in compression

Vertical Loads	Location	Trib. Width	Dead (0.90)	Roof Live (1.25)	Comments
0 - Self Weight (PLF)	0 to 12'	N/A	7.4	--	
1 - Trapezoidal (PLF)	0 to 12'	N/A	150 - 0	200 - 0	Typed on the member

Shear, Moment and Deflection

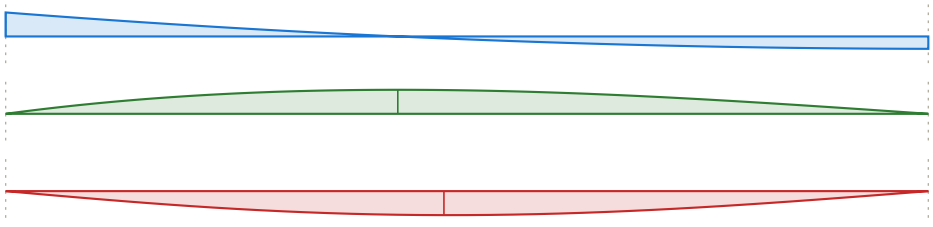

Shear (lbs)
D+Lr
max 1,444 @ 0

Moment (ft-lbs)
D+Lr
max 3,363 @ 5' 1 3/16"

Deflection (in)
D+Lr
0.264 in down @ 5' 8 3/8"
limit 0.8 in on the span

Beam #10

PASSED

(1) 5 1/2" x 12" 24F-1.8E 24F-V4 DF/DF Glulam

Level: Floor - 1st Level | Member type: Beam (floor and roof loads) | Length: 8' 6" | 2018 IRC | 2018 NDS | ASD

Controls: Moment 28% used
Section adequacy 72% (capacity to spare)

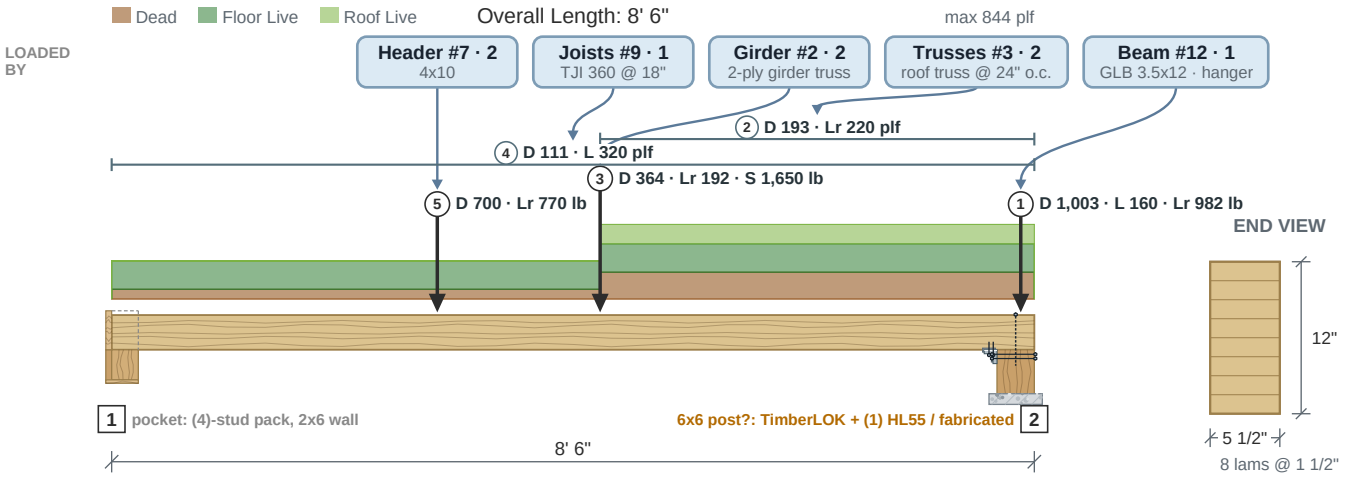

Drawing is conceptual. Locations are measured from the left end of the member; all dimensions are horizontal.

Design Results	Actual @ Location	Allowed	Result	LDF	Load Combination
Member Reaction (lbs)	5,201 @ 8' 6"	19,662 (5 1/2")	Passed (26% used)	--	
Plate Bearing (psi)	99 @ 0	668 (2x6 wall, DF-L #2)	Passed (15% used)	--	
Shear (lbs)	2,553 @ 7' 3 1/4"	13,411	Passed (19% used)	1.15	D+0.75L+0.75S
Moment (Ft-lbs)	8,489 @ 4' 6"	30,360	Passed (28% used)	1.15	D+0.75L+0.75S
Live Load Defl. (in)	0.026 @ 4' 2 1/4"	0.283	Passed (L/3,854)	--	L
Total Load Defl. (in)	0.072 @ 4' 3 3/4"	0.567	Passed (L/1,409)	--	D+0.75L+0.75S
Stud pack (lbs)	2,984 @ 0	26,676	Passed (11% used)	--	

- Deflection criteria: floor live alone L/360 (IRC Table R301.7); roof live or snow alone L/240 (IRC Table R301.7); dead plus live L/180 (this member's own limit).
- Bending adjustment factors: CD = 1.15, CL = 1.00 (D+0.75L+0.75S).
- Beam stability: each moment checked against the bracing of its compression edge (CL = 1.00 where braced).
- Unbalanced glulam layup: install with the tension laminations at the bottom, proper side up as marked by the manufacturer.
- Member self weight of 15 plf is included.
- Point loads within 2 in of a bearing go straight into that support: they are in its reaction and bearing check, not in shear or moment.
- Calculations per NDS 2018, ASD, every load combination with its own load duration factor.

	Bearing Length		Loads to Supports (lbs)					
Supports	**Provided**	**Required**	**Dead**	**Floor Live**	**Roof Live**	**Snow**	**Total**	**Load goes to**
1 @ 0	5 1/2"	13/16"	1,355	1,362	810	776	**2,984**	SpotFtg Bm #10-1 (in a beam pocket in a 2x6 stud wall 10 ft tall (the default), on a (4)-stud pack -- no post cap)
2 @ 8' 6"	5 1/2" seat	1 7/16"	2,552	1,518	2,015	874	**5,201**	SpotFtg Bm #10-2 (6x6 post? (10' assumed, 70%): TimberLOK + (1) HL55 / fabricated)

Total = the governing ASD combination at that support ("up": the governing uplift, where another combination lifts it); the category columns are service loads.

Lateral Bracing	Bracing Intervals	Comments
Top Edge (Lu)	continuous	braced by the sheathing
Bottom Edge (Lu)	8' 6" o/c	used for C_L only where the bottom edge is in compression

Vertical Loads	Location	Trib. Width	Dead (0.90)	Floor Live (1.00)	Roof Live (1.25)	Snow (1.15)	Comments
0 - Self Weight (PLF)	0 to 8' 6"	N/A	15	--	--	--	
1 - Point (lb)	8' 4 1/2"	N/A	1,003	160	982.5	--	Linked from: Beam #12, Support 1
2 - Uniform (PLF)	4' 6" to 8' 6"	N/A	192.8	--	220	--	Linked from: Trusses #3, Support 2
3 - Point (lb)	4' 6"	N/A	364.1	--	192.5	1,650	Linked from: Girder #2, Support 2
4 - Uniform (PLF)	0 to 8' 6"	N/A	110.8	320	--	--	Linked from: Joists #9, Support 1
5 - Point (lb)	3'	N/A	699.8	--	769.7	--	Linked from: Header #7, Support 2

Beam #10 (continued)

Beam, floor and roof loads | (1) 5 1/2" x 12" 24F-1.8E 24F-V4 DF/DF Glulam

Shear, Moment and Deflection

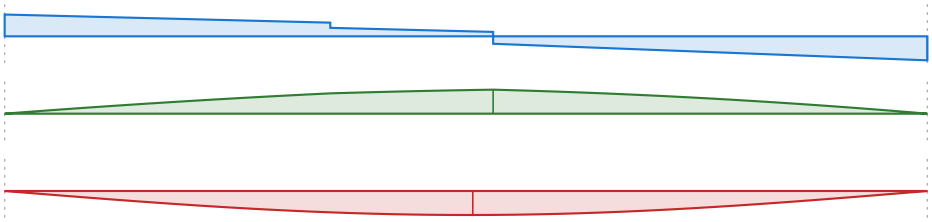

Shear (lbs)
D+0.75L+0.75S
max -3,239 @ 8' 6"

Moment (ft-lbs)
D+0.75L+0.75S
max 8,488 @ 4' 6"

Deflection (in)
D+0.75L+0.75S
0.072 in down @ 4' 3 3/4"
limit 0.567 in on the span

Beam #11

(1) 5 1/2" x 12" 24F-1.8E 24F-V4 DF/DF Glulam

Level: Floor - 1st Level | Member type: Beam (floor and roof loads) | Length: 8' 6" | 2018 IRC | 2018 NDS | ASD

PASSED

Controls: Shear 61% used

Section adequacy 39.3% (capacity to spare)

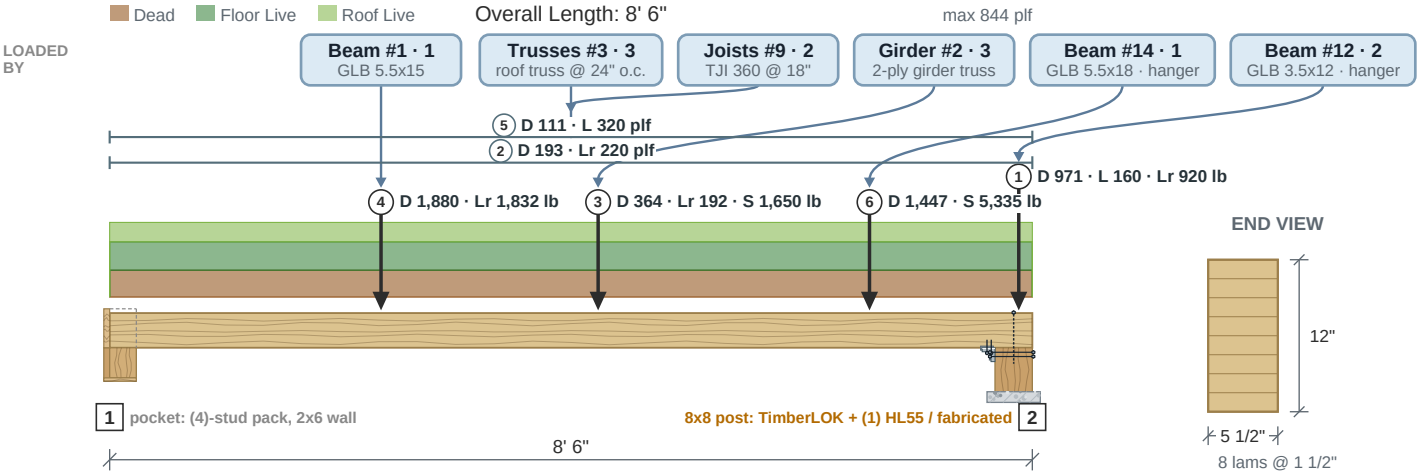

Drawing is conceptual. Locations are measured from the left end of the member; all dimensions are horizontal.

Design Results	Actual @ Location	Allowed	Result	LDF	Load Combination
Member Reaction (lbs)	9,515 @ 8' 6"	26,812 (7 1/2")	Passed (35% used)	--	
Plate Bearing (psi)	195 @ 0	668 (2x6 wall, DF-L #2)	Passed (29% used)	--	
Shear (lbs)	8,140 @ 7' 2 1/4"	13,411	Passed (61% used)	1.15	D+S
Moment (Ft-lbs)	14,958 @ 4' 6"	30,360	Passed (49% used)	1.15	D+0.75L+0.75S
Live Load Defl. (in)	0.068 @ 4' 8 1/2"	0.425	Passed (L/1,500)	--	S
Total Load Defl. (in)	0.137 @ 4' 3 5/8"	0.567	Passed (L/743)	--	D+0.75L+0.75S
Stud pack (lbs)	5,893 @ 0	26,676	Passed (22% used)	--	

- Deflection criteria: floor live alone L/360 (IRC Table R301.7); roof live or snow alone L/240 (IRC Table R301.7); dead plus live L/180 (this member's own limit).
- Bending adjustment factors: CD = 1.15, CL = 1.00 (D+0.75L+0.75S).
- Beam stability: each moment checked against the bracing of its compression edge (CL = 1.00 where braced).
- Unbalanced glulam layup: install with the tension laminations at the bottom, proper side up as marked by the manufacturer.
- Member self weight of 15 plf is included.
- Point loads within 2 in of a bearing go straight into that support: they are in its reaction and bearing check, not in shear or moment.
- Calculations per NDS 2018, ASD, every load combination with its own load duration factor.

	Bearing Length		Loads to Supports (lbs)					
Supports	**Provided**	**Required**	**Dead**	**Floor Live**	**Roof Live**	**Snow**	**Total**	**Load goes to**
1 @ 0	5 1/2"	1 5/8"	3,122	1,362	2,332	1,718	**5,893**	SpotFtg Bm #11-1 (in a beam pocket in a 2x6 stud wall 10 ft tall (the default), on a (4)-stud pack -- no post cap)
2 @ 8' 6"	7 1/2" seat	2 11/16"	4,248	1,518	2,482	5,267	**9,515**	SpotFtg Bm #11-2 (8x8 post (10' assumed, 75%): TimberLOK + (1) HL55 / fabricated)

Total = the governing ASD combination at that support ("up": the governing uplift, where another combination lifts it); the category columns are service loads.

Lateral Bracing	Bracing Intervals	Comments
Top Edge (Lu)	continuous	braced by the sheathing
Bottom Edge (Lu)	8' 6" o/c	used for C_L only where the bottom edge is in compression

Vertical Loads	Location	Trib. Width	Dead (0.90)	Floor Live (1.00)	Roof Live (1.25)	Snow (1.15)	Comments
0 - Self Weight (PLF)	0 to 8' 6"	N/A	15	--	--	--	
1 - Point (lb)	8' 4 1/2"	N/A	971.1	160	919.7	--	Linked from: Beam #12, Support 2
2 - Uniform (PLF)	0 to 8' 6"	N/A	192.8	--	220	--	Linked from: Trusses #3, Support 3
3 - Point (lb)	4' 6"	N/A	364.1	--	192.5	1,650	Linked from: Girder #2, Support 3
4 - Point (lb)	2' 6"	N/A	1,880	--	1,832	--	Linked from: Beam #1, Support 1
5 - Uniform (PLF)	0 to 8' 6"	N/A	110.8	320	--	--	Linked from: Joists #9, Support 2
6 - Point (lb)	7'	N/A	1,447	--	--	5,335	Linked from: Beam #14, Support 1

Beam #11 (continued)

Beam, floor and roof loads | (1) 5 1/2" x 12" 24F-1.8E 24F-V4 DF/DF Glulam

Shear, Moment and Deflection

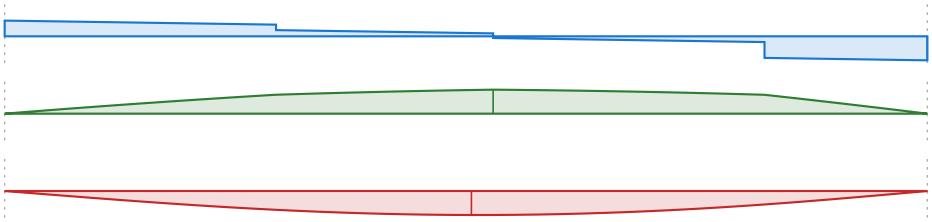

Shear (lbs)
D+0.75L+0.75S
max -8,262 @ 8' 6"

Moment (ft-lbs)
D+0.75L+0.75S
max 14,957 @ 4' 6"

Deflection (in)
D+0.75L+0.75S
0.137 in down @ 4' 3 5/8"
limit 0.567 in on the span

Beam #12

(1) 3 1/2" x 12" 24F-1.8E 24F-V4 DF/DF Glulam

Level: Floor - 1st Level | Member type: Beam (floor and roof loads) | Length: 16' | 2018 IRC | 2018 NDS | ASD

PASSED

Controls: Bearing 35% used
Section adequacy 65.2% (capacity to spare)

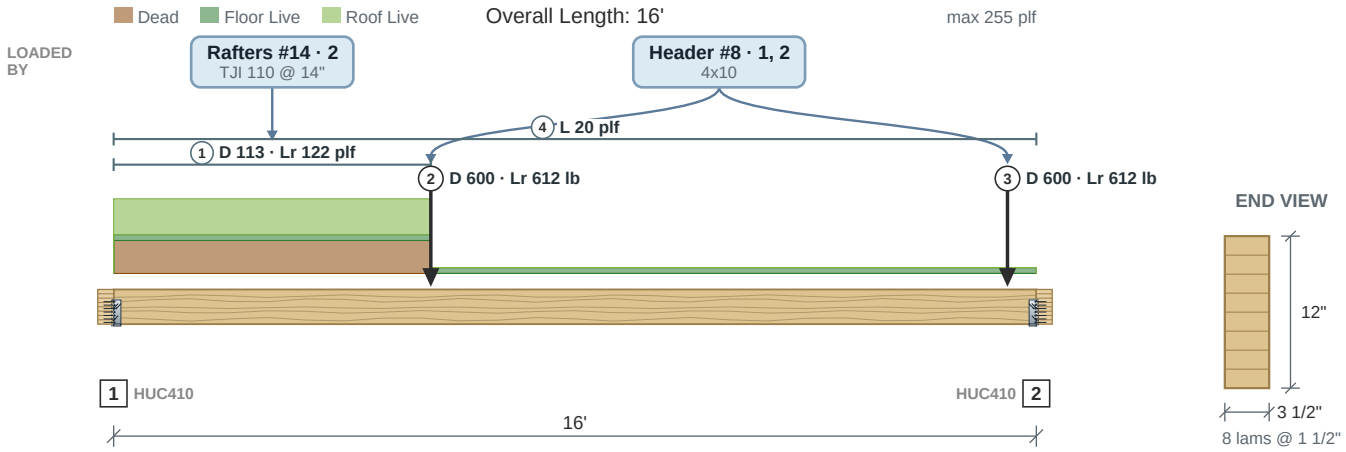

Drawing is conceptual. Locations are measured from the left end of the member; all dimensions are horizontal.

Design Results	Actual @ Location	Allowed	Result	LDF	Load Combination
Member Reaction (lbs)	1,982 @ 0	5,688 (2 1/2")	Passed (35% used)	--	
Shear (lbs)	1,982 @ 0	9,274	Passed (21% used)	1.25	D+Lr
Moment (Ft-lbs)	7,197 @ 5' 6"	21,000	Passed (34% used)	1.25	D+Lr
Live Load Defl. (in)	0.149 @ 7' 6"	0.8	Passed (L/1,289)	--	Lr
Total Load Defl. (in)	0.307 @ 7' 6"	1.067	Passed (L/625)	--	D+Lr

- Deflection criteria: floor live alone L/360 (IRC Table R301.7); roof live or snow alone L/240 (IRC Table R301.7); dead plus live L/180 (this member's own limit).
- Bending adjustment factors: CD = 1.25, CL = 1.00 (D+Lr).
- Beam stability: each moment checked against the bracing of its compression edge (CL = 1.00 where braced).
- Unbalanced glulam layup: install with the tension laminations at the bottom, proper side up as marked by the manufacturer.
- Member self weight of 9.6 plf is included.
- Calculations per NDS 2018, ASD, every load combination with its own load duration factor.

	Bearing Length		Loads to Supports (lbs)				
Supports	**Provided**	**Required**	**Dead**	**Floor Live**	**Roof Live**	**Total**	**Load goes to**
1 @ 0	2 1/2" seat	7/8"	1,003	160	979	**1,982**	Beam #10 (flush, in an HUC410 concealed flanges, 22%)
2 @ 16'	2 1/2" seat	13/16"	971	160	920	**1,891**	Beam #11 (flush, in an HUC410 concealed flanges, 25%)

Total = the governing ASD combination at that support ("up": the governing uplift, where another combination lifts it); the category columns are service loads.

Lateral Bracing	Bracing Intervals	Comments
Top Edge (Lu)	continuous	braced by the sheathing
Bottom Edge (Lu)	16' o/c	used for C_L only where the bottom edge is in compression

Vertical Loads	Location	Trib. Width	Dead (0.90)	Floor Live (1.00)	Roof Live (1.25)	Comments
0 - Self Weight (PLF)	0 to 16'	N/A	9.6	--	--	
1 - Uniform (PLF)	0 to 5' 6"	N/A	112.7	--	122.5	Linked from: Rafters #14, Support 2
2 - Point (lb)	5' 6"	N/A	600.4	--	612.5	Linked from: Header #8, Support 1
3 - Point (lb)	15' 6"	N/A	600.4	--	612.5	Linked from: Header #8, Support 2
4 - Uniform (PLF)	0 to 16'	N/A	--	20	--	Typed on the member

Shear, Moment and Deflection



Shear (lbs)
D+Lr
max 1,982 @ 0

Moment (ft-lbs)
D+Lr
max 7,197 @ 5' 6"

Deflection (in)
D+Lr
0.307 in down @ 7' 6"
limit 1.067 in on the span

Beam #13

(1) 5 1/2" x 18" 24F-1.8E 24F-V4 DF/DF Glulam

Level: Floor - 1st Level | Member type: Beam (roof loads) | Length: 19' | 2018 IRC | 2018 NDS | ASD

PASSED

Controls: Stud pack 82% used

Section adequacy 18.2% (capacity to spare)

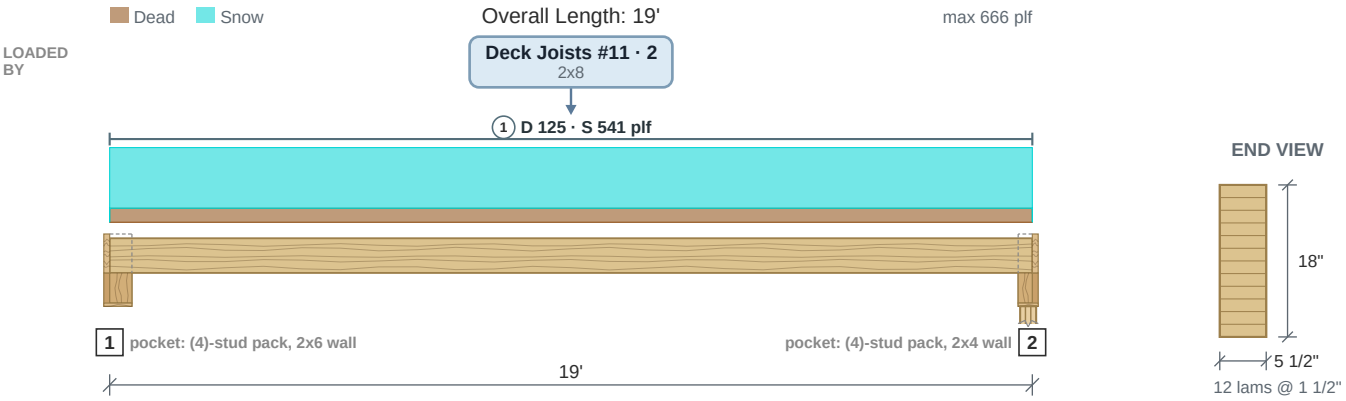

Drawing is conceptual. Locations are measured from the left end of the member; all dimensions are horizontal.

Design Results	Actual @ Location	Allowed	Result	LDF	Load Combination
Member Reaction (lbs)	6,540 @ 19'	12,512 (3 1/2")	Passed (52% used)	--	
Plate Bearing (psi)	340 @ 19'	692 (2x4 wall, DF-L #2)	Passed (49% used)	--	
Shear (lbs)	5,407 @ 17' 4 1/4"	20,117	Passed (27% used)	1.15	D+S
Moment (Ft-lbs)	31,066 @ 9' 6"	65,790	Passed (47% used)	1.15	D+S
Live Load Defl. (in)	0.33 @ 9' 6"	0.95	Passed (L/692)	--	S
Total Load Defl. (in)	0.42 @ 9' 6"	1.267	Passed (L/543)	--	D+S
Stud pack (lbs)	6,540 @ 19'	7,997	Passed (82% used)	--	

- Deflection criteria: roof live or snow alone L/240 (IRC Table R301.7); dead plus live L/180 (this member's own limit).
- Bending adjustment factors: CD = 1.15, CV = 0.963, CL = 1.00 (D+S).
- Beam stability: each moment checked against the bracing of its compression edge (CL = 1.00 where braced).
- Unbalanced glulam layup: install with the tension laminations at the bottom, proper side up as marked by the manufacturer.
- Member self weight of 22.5 plf is included.
- Calculations per NDS 2018, ASD, every load combination with its own load duration factor.

	Bearing Length		Loads to Supports (lbs)			
Supports	Provided	Required	Dead	Snow	Total	Load goes to
1 @ 0	5 1/2"	1 13/16"	1,401	5,139	**6,540**	SpotFtg Bm #11-1 (in a beam pocket in a 2x6 stud wall 10 ft tall (the default), on a (4)-stud pack -- no post cap)
2 @ 19'	3 1/2"	1 13/16"	1,401	5,139	**6,540**	Header #21 (in a beam pocket in a 2x4 stud wall 10 ft tall (the default), on a (4)-stud pack -- no post cap)

Total = the governing ASD combination at that support ("up": the governing uplift, where another combination lifts it); the category columns are service loads.

Lateral Bracing	Bracing Intervals	Comments
Top Edge (Lu)	continuous	braced by the sheathing
Bottom Edge (Lu)	19' o/c	used for C_L only where the bottom edge is in compression

Vertical Loads	Location	Trib. Width	Dead (0.90)	Snow (1.15)	Comments
0 - Self Weight (PLF)	0 to 19'	N/A	22.5	--	
1 - Uniform (PLF)	0 to 19'	N/A	124.9	541	Linked from: Deck Joists #11, Support 2

Shear, Moment and Deflection

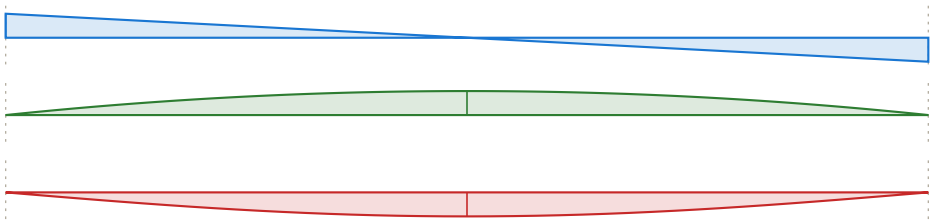

Shear (lbs)
D+S
max 6,540 @ 0

Moment (ft-lbs)
D+S
max 31,066 @ 9' 6"

Deflection (in)
D+S
0.42 in down @ 9' 6"
limit 1.267 in on the span

Beam #14

(1) 5 1/2" x 18" 24F-1.8E 24F-V4 DF/DF Glulam

Level: Floor - 1st Level | Member type: Beam (roof loads) | Length: 19' | 2018 IRC | 2018 NDS | ASD

PASSED

Controls: Moment 49% used
Section adequacy 51% (capacity to spare)

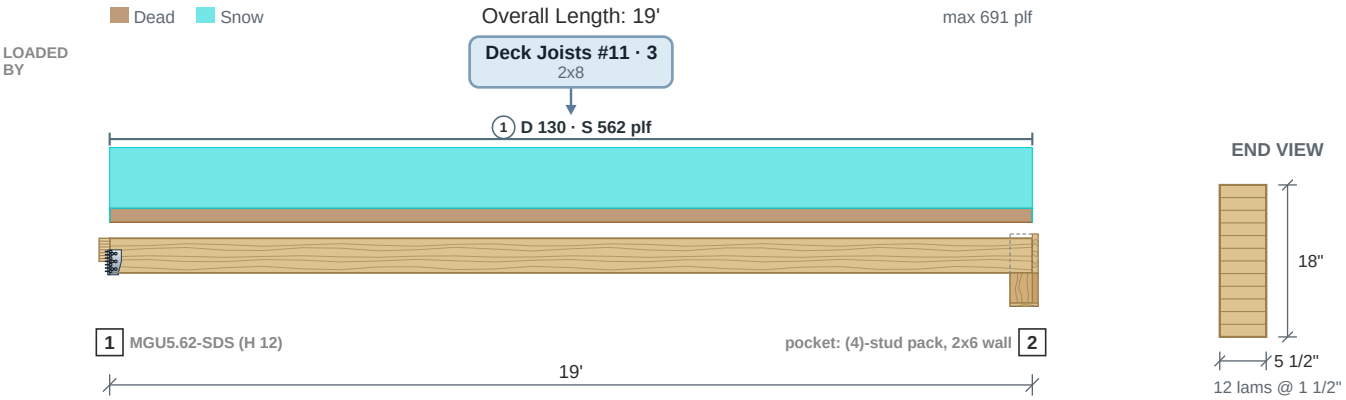

Drawing is conceptual. Locations are measured from the left end of the member; all dimensions are horizontal.

Design Results	Actual @ Location	Allowed	Result	LDF	Load Combination
Member Reaction (lbs)	6,782 @ 0	16,088 (4 1/2")	Passed (42% used)	--	
Plate Bearing (psi)	224 @ 19'	668 (2x6 wall, DF-L #2)	Passed (34% used)	--	
Shear (lbs)	6,782 @ 0	20,117	Passed (34% used)	1.15	D+S
Moment (Ft-lbs)	32,215 @ 9' 6"	65,790	Passed (49% used)	1.15	D+S
Live Load Defl. (in)	0.342 @ 9' 6"	0.95	Passed (L/666)	--	S
Total Load Defl. (in)	0.435 @ 9' 6"	1.267	Passed (L/524)	--	D+S
Stud pack (lbs)	6,782 @ 19'	26,676	Passed (25% used)	--	

- Deflection criteria: roof live or snow alone L/240 (IRC Table R301.7); dead plus live L/180 (this member's own limit).
- Bending adjustment factors: CD = 1.15, CV = 0.963, CL = 1.00 (D+S).
- Beam stability: each moment checked against the bracing of its compression edge (CL = 1.00 where braced).
- Unbalanced glulam layup: install with the tension laminations at the bottom, proper side up as marked by the manufacturer.
- Member self weight of 22.5 plf is included.
- Calculations per NDS 2018, ASD, every load combination with its own load duration factor.

	Bearing Length		Loads to Supports (lbs)			
Supports	Provided	Required	Dead	Snow	Total	Load goes to
1 @ 0	4 1/2" seat	1 7/8"	1,446	5,335	**6,782**	Beam #11 (flush, in an MGU5.62-SDS (H 12) face mount, 28%)
2 @ 19'	5 1/2"	1 7/8"	1,446	5,335	**6,782**	SpotFtg Bm #14-2 (in a beam pocket in a 2x6 stud wall 10 ft tall (the default), on a (4)-stud pack -- no post cap)

Total = the governing ASD combination at that support ("up": the governing uplift, where another combination lifts it); the category columns are service loads.

Lateral Bracing	Bracing Intervals	Comments
Top Edge (Lu)	continuous	braced by the sheathing
Bottom Edge (Lu)	19' o/c	used for C_L only where the bottom edge is in compression

Vertical Loads	Location	Trib. Width	Dead (0.90)	Snow (1.15)	Comments
0 - Self Weight (PLF)	0 to 19'	N/A	22.5	--	
1 - Uniform (PLF)	0 to 19'	N/A	129.7	561.6	Linked from: Deck Joists #11, Support 3

Shear, Moment and Deflection

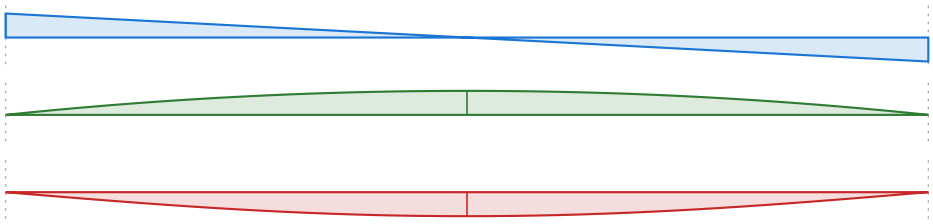

Shear (lbs)
D+S
max 6,782 @ 0

Moment (ft-lbs)
D+S
max 32,214 @ 9' 6"

Deflection (in)
D+S
0.435 in down @ 9' 6"
limit 1.267 in on the span

Beam #15

(1) 5 1/2" x 15" 24F-1.8E 24F-V4 DF/DF Glulam

Level: Floor - 1st Level | Member type: Beam (roof loads) | Length: 18' 6" | 2018 IRC | 2018 NDS | ASD

PASSED

Controls: Bearing 33% used

Section adequacy 67.3% (capacity to spare)

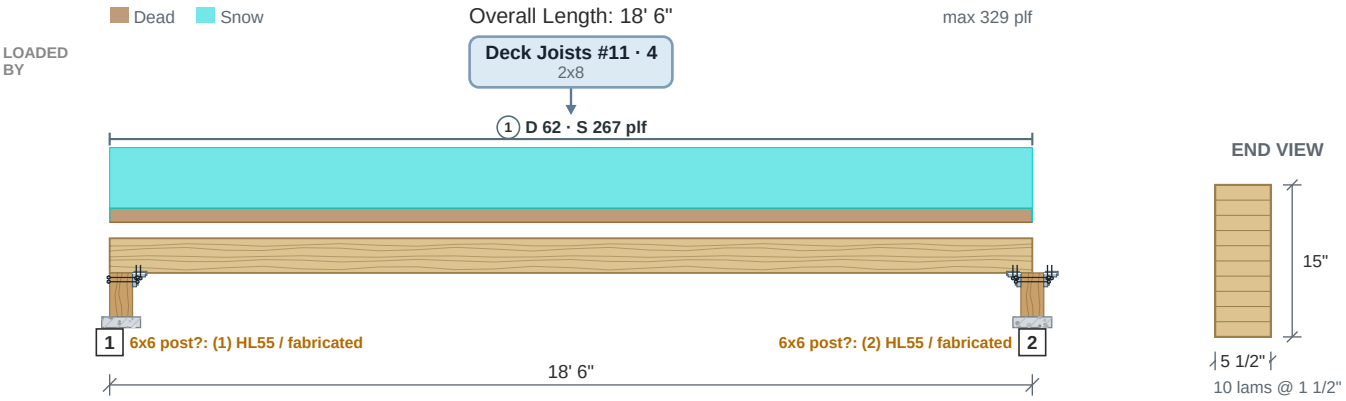

Drawing is conceptual. Locations are measured from the left end of the member; all dimensions are horizontal.

Design Results	Actual @ Location	Allowed	Result	LDF	Load Combination
Member Reaction (lbs)	3,219 @ 18' 6"	9,831 (2 3/4")	Passed (33% used)	--	
Shear (lbs)	2,704 @ 17' 1/4"	16,764	Passed (16% used)	1.15	D+S
Moment (Ft-lbs)	14,888 @ 9' 3"	46,652	Passed (32% used)	1.15	D+S
Live Load Defl. (in)	0.253 @ 9' 3"	0.925	Passed (L/877)	--	S
Total Load Defl. (in)	0.329 @ 9' 3"	1.233	Passed (L/674)	--	D+S

- Deflection criteria: roof live or snow alone L/240 (IRC Table R301.7); dead plus live L/180 (this member's own limit).
- Bending adjustment factors: CD = 1.15, CV = 0.983, CL = 1.00 (D+S).
- Beam stability: each moment checked against the bracing of its compression edge (CL = 1.00 where braced).
- Unbalanced glulam layup: install with the tension laminations at the bottom, proper side up as marked by the manufacturer.
- Member self weight of 18.8 plf is included.
- Calculations per NDS 2018, ASD, every load combination with its own load duration factor.

	Bearing Length		Loads to Supports (lbs)			
Supports	**Provided**	**Required**	**Dead**	**Snow**	**Total**	**Load goes to**
1 @ 0	5 1/2" seat	7/8"	745	2,474	**3,219**	SpotFtg Bm #15-1 (6x6 post? (10' assumed, 81%): (1) HL55 / fabricated)
2 @ 18' 6"	2 3/4" seat	7/8"	745	2,474	**3,219**	SpotFtg Bm #15-2 (6x6 post? (10' assumed, 64%): (2) HL55 / fabricated)

Total = the governing ASD combination at that support ("up": the governing uplift, where another combination lifts it); the category columns are service loads.

Lateral Bracing	Bracing Intervals	Comments
Top Edge (Lu)	continuous	braced by the sheathing
Bottom Edge (Lu)	18' 6" o/c	used for C_L only where the bottom edge is in compression

Vertical Loads	Location	Trib. Width	Dead (0.90)	Snow (1.15)	Comments
0 - Self Weight (PLF)	0 to 18' 6"	N/A	18.8	--	
1 - Uniform (PLF)	0 to 18' 6"	N/A	61.8	267.4	Linked from: Deck Joists #11, Support 4

Shear, Moment and Deflection

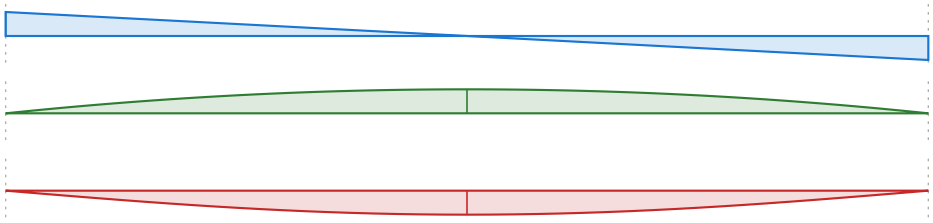

Shear (lbs)
D+S
max 3,219 @ 0

Moment (ft-lbs)
D+S
max 14,887 @ 9' 3"

Deflection (in)
D+S
0.329 in down @ 9' 3"
limit 1.233 in on the span

Beam #16

(1) 5 1/2" x 15" 24F-1.8E 24F-V4 DF/DF Glulam

Level: Floor - 1st Level | Member type: Beam (roof loads) | Length: 14' | 2018 IRC | 2018 NDS | ASD

PASSED

Controls: Bearing 29% used

Section adequacy 70.8% (capacity to spare)

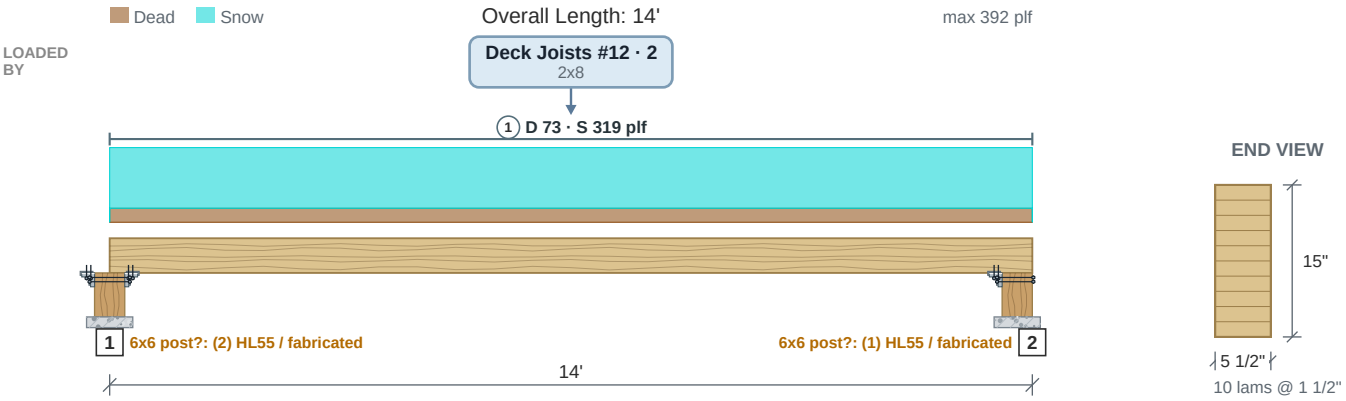

Drawing is conceptual. Locations are measured from the left end of the member; all dimensions are horizontal.

Design Results	Actual @ Location	Allowed	Result	LDF	Load Combination
Member Reaction (lbs)	2,875 @ 0	9,831 (2 3/4")	Passed (29% used)	--	
Shear (lbs)	2,268 @ 1' 5 3/4"	16,764	Passed (14% used)	1.15	D+S
Moment (Ft-lbs)	10,063 @ 7'	47,438	Passed (21% used)	1.15	D+S
Live Load Defl. (in)	0.099 @ 7'	0.7	Passed (L/1,699)	--	S
Total Load Defl. (in)	0.127 @ 7'	0.933	Passed (L/1,318)	--	D+S

- Deflection criteria: roof live or snow alone L/240 (IRC Table R301.7); dead plus live L/180 (this member's own limit).
- Bending adjustment factors: CD = 1.15, CL = 1.00 (D+S).
- Beam stability: each moment checked against the bracing of its compression edge (CL = 1.00 where braced).
- Unbalanced glulam layup: install with the tension laminations at the bottom, proper side up as marked by the manufacturer.
- Member self weight of 18.8 plf is included.
- Calculations per NDS 2018, ASD, every load combination with its own load duration factor.

	Bearing Length		Loads to Supports (lbs)			
Supports	**Provided**	**Required**	**Dead**	**Snow**	**Total**	**Load goes to**
1 @ 0	2 3/4" seat	13/16"	645	2,230	**2,875**	SpotFtg Bm #15-2 (6x6 post? (10' assumed, 64%): (2) HL55 / fabricated)
2 @ 14'	5 1/2" seat	13/16"	645	2,230	**2,875**	SpotFtg Bm #16-2 (6x6 post? (10' assumed, 83%): (1) HL55 / fabricated)

Total = the governing ASD combination at that support ("up": the governing uplift, where another combination lifts it); the category columns are service loads.

Lateral Bracing	Bracing Intervals	Comments
Top Edge (Lu)	continuous	braced by the sheathing
Bottom Edge (Lu)	14' o/c	used for C_L only where the bottom edge is in compression

Vertical Loads	Location	Trib. Width	Dead (0.90)	Snow (1.15)	Comments
0 - Self Weight (PLF)	0 to 14'	N/A	18.8	--	
1 - Uniform (PLF)	0 to 14'	N/A	73.4	318.5	Linked from: Deck Joists #12, Support 2

Shear, Moment and Deflection

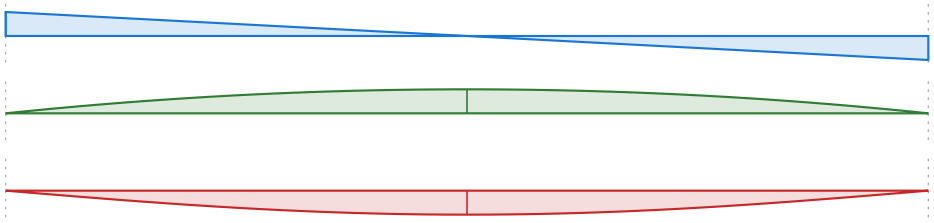

Shear (lbs)
D+S
max 2,875 @ 0

Moment (ft-lbs)
D+S
max 10,062 @ 7'

Deflection (in)
D+S
0.127 in down @ 7'
limit 0.933 in on the span

Beam #17

(1) 4x10 SP No. 2 (3 1/2" x 9 1/4")

Level: Floor - 1st Level | Member type: Beam (roof loads) | Length: 8' | 2018 IRC | 2018 NDS | ASD

PASSED

Controls: Moment 76% used

Section adequacy 24.1% (capacity to spare)

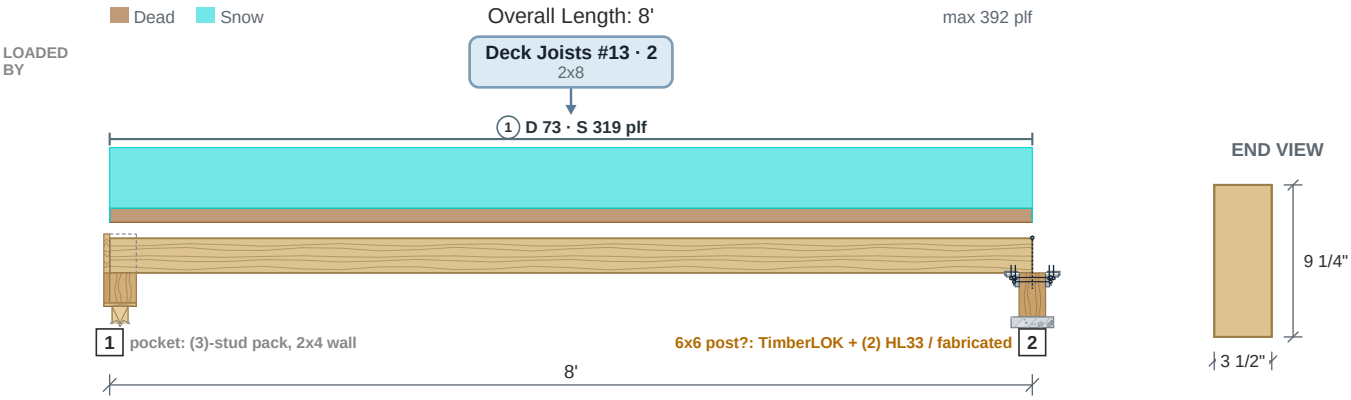

Drawing is conceptual. Locations are measured from the left end of the member; all dimensions are horizontal.

Design Results	Actual @ Location	Allowed	Result	LDF	Load Combination
Member Reaction (lbs)	1,597 @ 8'	5,438 (2 3/4")	Passed (29% used)	--	
Plate Bearing (psi)	130 @ 0	692 (2x4 wall, DF-L #2)	Passed (19% used)	--	
Shear (lbs)	1,244 @ 7' 1 3/8"	4,343	Passed (29% used)	1.15	D+S
Moment (Ft-lbs)	3,194 @ 4'	4,209	Passed (76% used)	1.15	D+S
Live Load Defl. (in)	0.091 @ 4'	0.4	Passed (L/1,057)	--	S
Total Load Defl. (in)	0.114 @ 4'	0.533	Passed (L/843)	--	D+S
Stud pack (lbs)	1,597 @ 0	5,998	Passed (27% used)	--	

- Deflection criteria: roof live or snow alone L/240 (IRC Table R301.7); dead plus live L/180 (this member's own limit).
- Bending adjustment factors: CD = 1.15, CL = 1.00 (D+S).
- Beam stability: each moment checked against the bracing of its compression edge (CL = 1.00 where braced).
- Member self weight of 7.4 plf is included.
- Calculations per NDS 2018, ASD, every load combination with its own load duration factor.

	Bearing Length		Loads to Supports (lbs)			
Supports	**Provided**	**Required**	**Dead**	**Snow**	**Total**	**Load goes to**
1 @ 0	3 1/2"	13/16"	323	1,274	**1,597**	Header #26 (in a beam pocket in a 2x4 stud wall 10 ft tall (the default), on a (3)-stud pack -- no post cap)
2 @ 8'	2 3/4" seat	13/16"	323	1,274	**1,597**	SpotFtg Bm #17-2 (6x6 post? (10' assumed, 83%): TimberLOK + (2) HL33 / fabricated)

Total = the governing ASD combination at that support ("up": the governing uplift, where another combination lifts it); the category columns are service loads.

Lateral Bracing	Bracing Intervals	Comments
Top Edge (Lu)	continuous	braced by the sheathing
Bottom Edge (Lu)	8' o/c	used for C_L only where the bottom edge is in compression

Vertical Loads	Location	Trib. Width	Dead (0.90)	Snow (1.15)	Comments
0 - Self Weight (PLF)	0 to 8'	N/A	7.4	--	
1 - Uniform (PLF)	0 to 8'	N/A	73.4	318.5	Linked from: Deck Joists #13, Support 2

Shear, Moment and Deflection

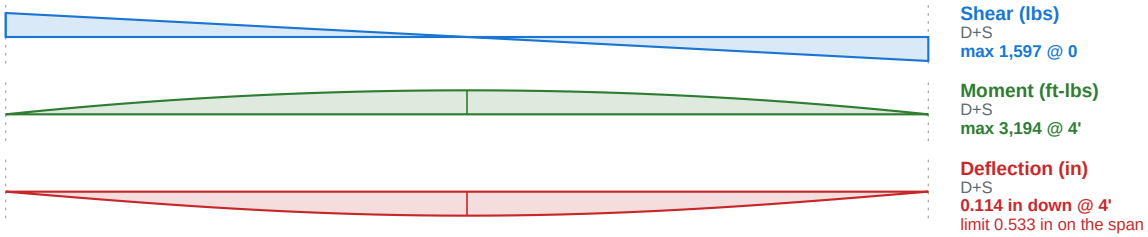

Shear (lbs)
D+S
max 1,597 @ 0

Moment (ft-lbs)
D+S
max 3,194 @ 4'

Deflection (in)
D+S
0.114 in down @ 4'
limit 0.533 in on the span

Beam #18

(1) 4x10 SP No. 2 (3 1/2" x 9 1/4")

Level: Floor - 1st Level | Member type: Beam (roof loads) | Length: 16' | 2018 IRC | 2018 NDS | ASD

PASSED

Controls: Moment 77% used
Section adequacy 23% (capacity to spare)

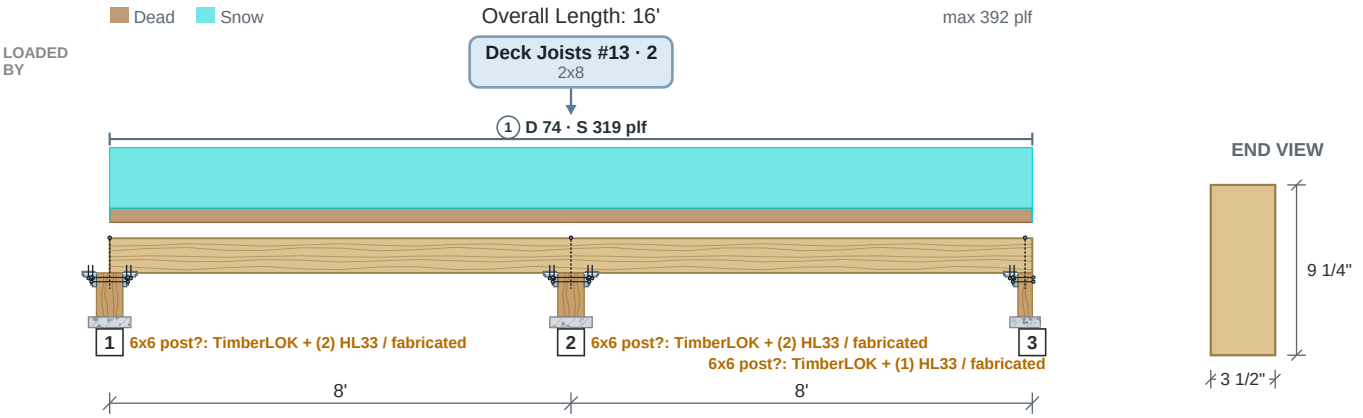

Drawing is conceptual. Locations are measured from the left end of the member; all dimensions are horizontal.

Design Results	Actual @ Location	Allowed	Result	LDF	Load Combination
Member Reaction (lbs)	3,995 @ 8'	11,617 (5 1/2")	Passed (34% used)	--	
Shear (lbs)	1,598 @ 7'	4,343	Passed (37% used)	1.15	D+S
Neg Moment (Ft-lbs)	-3,196 @ 8'	4,148	Passed (77% used)	1.15	D+S
Live Load Defl. (in)	0.038 @ 12' 9 5/8"	0.4	Passed (L/2,548)	--	S
Total Load Defl. (in)	0.047 @ 12' 9 5/8"	0.533	Passed (L/2,032)	--	D+S

- Deflection criteria: roof live or snow alone L/240 (IRC Table R301.7); dead plus live L/180 (this member's own limit).
- Bending adjustment factors: CD = 1.15, CL = 0.986 (D+S).
- Beam stability (NDS 3.3.3) governs bending: negative moment 3196 lbf-ft, 0.00-8.00 ft, CL 0.986 (unbraced 8.0 ft).
- Member self weight of 7.4 plf is included.
- Calculations per NDS 2018, ASD, every load combination with its own load duration factor.

	Bearing Length		Loads to Supports (lbs)			
Supports	**Provided**	**Required**	**Dead**	**Snow**	**Total**	**Load goes to**
1 @ 0	2 3/4" seat	5/8"	243	956	**1,198**	SpotFtg Bm #17-2 (6x6 post? (10' assumed, 83%): TimberLOK + (2) HL33 / fabricated)
2 @ 8'	5 1/2" seat	1 5/8"	809	3,185	**3,995**	SpotFtg Bm #18-2 (6x6 post? (10' assumed, 76%): TimberLOK + (2) HL33 / fabricated)
3 @ 16'	5 1/2" seat	5/8"	243	956	**1,198**	SpotFtg Bm #18-3 (6x6 post? (10' assumed, 92%): TimberLOK + (1) HL33 / fabricated)

Total = the governing ASD combination at that support ("up": the governing uplift, where another combination lifts it); the category columns are service loads.

Lateral Bracing	Bracing Intervals	Comments
Top Edge (Lu)	continuous	braced by the sheathing
Bottom Edge (Lu)	8' o/c	governs C_L here: the bottom edge is in compression

Vertical Loads	Location	Trib. Width	Dead (0.90)	Snow (1.15)	Comments
0 - Self Weight (PLF)	0 to 16'	N/A	7.4	--	
1 - Uniform (PLF)	0 to 16'	N/A	73.6	318.5	Linked from: Deck Joists #13, Support 2

Shear, Moment and Deflection

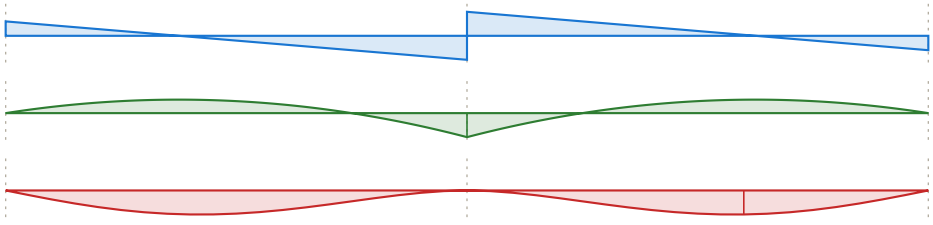

Shear (lbs)
D+S
max 1,997 @ 8'

Moment (ft-lbs)
D+S
max -3,196 @ 8'

Deflection (in)
D+S
0.047 in down @ 12' 9 5/8"
limit 0.533 in on the span

Beam #19

(2) 1 3/4" x 18" 2.0E Microlam LVL (Weyerhaeuser)

Level: Floor - 1st Level | Member type: Beam (floor loads) | Length: 10' | 2018 IRC | 2018 NDS | ASD

PASSED

Controls: Bearing 39% used
Section adequacy 61% (capacity to spare)

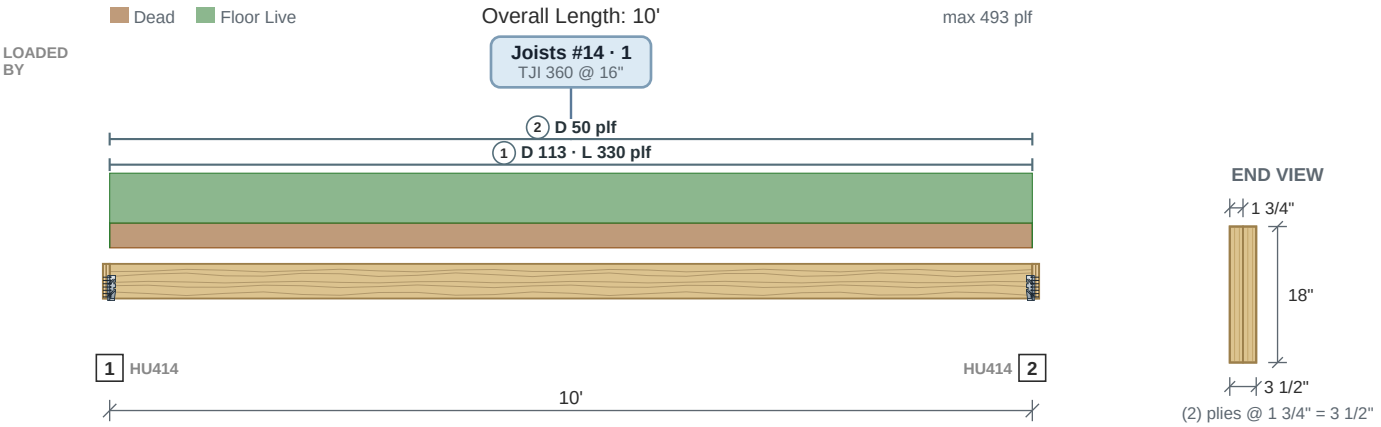

Drawing is conceptual. Locations are measured from the left end of the member; all dimensions are horizontal.

Design Results	Actual @ Location	Allowed	Result	LDF	Load Combination
Member Reaction (lbs)	2,559 @ 0	6,562 (2 1/2")	Passed (39% used)	--	
Shear (lbs)	2,559 @ 0	11,970	Passed (21% used)	1.00	D+L
Moment (Ft-lbs)	6,398 @ 5'	38,753	Passed (17% used)	1.00	D+L
Live Load Defl. (in)	0.029 @ 5'	0.333	Passed (L/4,086)	--	L
Total Load Defl. (in)	0.046 @ 5'	0.667	Passed (L/2,635)	--	D+L

- Deflection criteria: floor live alone L/360 (IRC Table R301.7); dead plus live L/180 (this member's own limit).
- Bending adjustment factors: CD = 1.00, CV = 0.946, CL = 1.00 (D+L).
- Beam stability: each moment checked against the bracing of its compression edge (CL = 1.00 where braced).
- Member self weight of 18.4 plf is included.
- Calculations per NDS 2018 and Weyerhaeuser ICC-ES ESR-1387, ASD, every load combination with its own load duration factor.

	Bearing Length		Loads to Supports (lbs)			
Supports	**Provided**	**Required**	**Dead**	**Floor Live**	**Total**	**Load goes to**
1 @ 0	2 1/2" seat	1"	909	1,650	**2,559**	Beam #20 (flush, in an HU414 face mount, 4.5%)
2 @ 10'	2 1/2" seat	1"	909	1,650	**2,559**	Beam #21 (flush, in an HU414 face mount, 4.5%)

Total = the governing ASD combination at that support ("up": the governing uplift, where another combination lifts it); the category columns are service loads.

Lateral Bracing	Bracing Intervals	Comments
Top Edge (Lu)	continuous	braced by the sheathing
Bottom Edge (Lu)	10' o/c	used for C_L only where the bottom edge is in compression

Vertical Loads	Location	Trib. Width	Dead (0.90)	Floor Live (1.00)	Comments
0 - Self Weight (PLF)	0 to 10'	N/A	18.4	--	
1 - Uniform (PLF)	0 to 10'	N/A	113.4	330	Linked from: Joists #14, Support 1
2 - Uniform (PLF)	0 to 10'	N/A	50	--	Typed on the member

Shear, Moment and Deflection

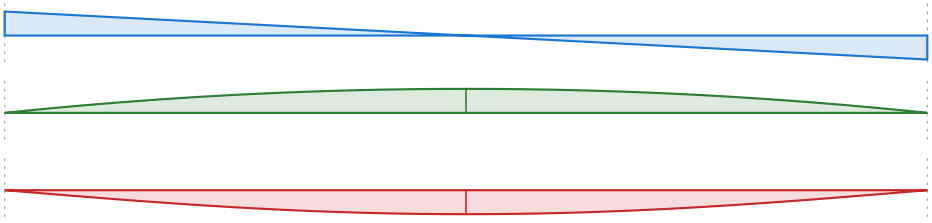

Shear (lbs)
D+L
max 2,559 @ 0

Moment (ft-lbs)
D+L
max 6,398 @ 5'

Deflection (in)
D+L
0.046 in down @ 5' (shear incl.)
limit 0.667 in on the span

Beam #20

(2) 1 3/4" x 18" 2.0E Microlam LVL (Weyerhaeuser)

Level: Floor - 1st Level | Member type: Beam (floor loads) | Length: 19' | 2018 IRC | 2018 NDS | ASD

PASSED

Controls: Shear 20% used

Section adequacy 80.2% (capacity to spare)

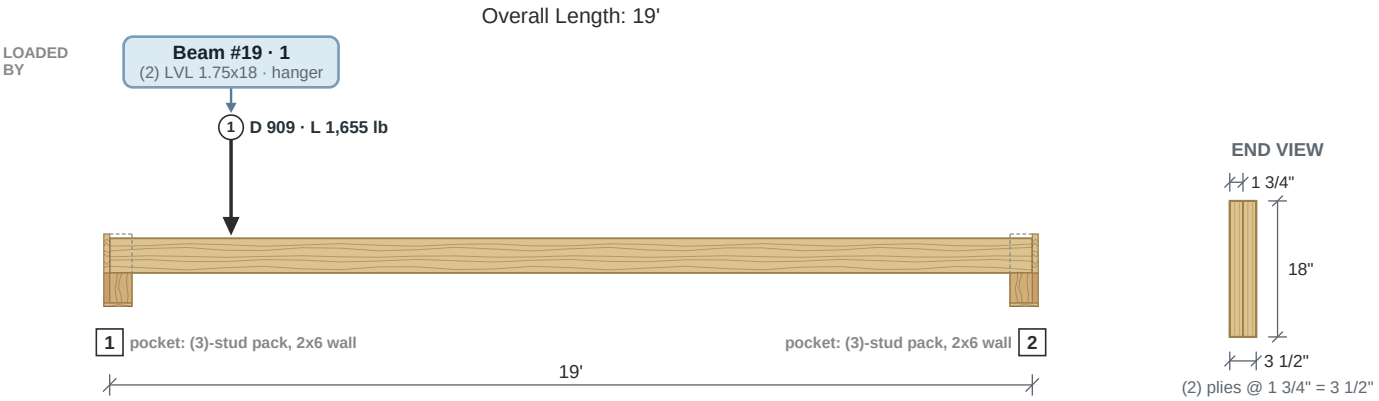

Drawing is conceptual. Locations are measured from the left end of the member; all dimensions are horizontal.

Design Results	Actual @ Location	Allowed	Result	LDF	Load Combination
Member Reaction (lbs)	2,401 @ 0	14,438 (5 1/2")	Passed (17% used)	--	
Plate Bearing (psi)	125 @ 0	668 (2x6 wall, DF-L #2)	Passed (19% used)	--	
Shear (lbs)	2,370 @ 1' 8 3/4"	11,970	Passed (20% used)	1.00	D+L
Moment (Ft-lbs)	5,946 @ 2' 6"	38,753	Passed (15% used)	1.00	D+L
Live Load Defl. (in)	0.054 @ 8' 1 7/8"	0.633	Passed (L/4,224)	--	L
Total Load Defl. (in)	0.1 @ 8' 1 7/8"	1.267	Passed (L/2,285)	--	D+L
Stud pack (lbs)	2,401 @ 0	20,007	Passed (12% used)	--	

- Deflection criteria: floor live alone L/360 (IRC Table R301.7); dead plus live L/180 (this member's own limit).
- Bending adjustment factors: CD = 1.00, CV = 0.946, CL = 1.00 (D+L).
- Beam stability: each moment checked against the bracing of its compression edge (CL = 1.00 where braced).
- Member self weight of 18.4 plf is included.
- Calculations per NDS 2018 and Weyerhaeuser ICC-ES ESR-1387, ASD, every load combination with its own load duration factor.

	Bearing Length		Loads to Supports (lbs)			
Supports	**Provided**	**Required**	**Dead**	**Floor Live**	**Total**	**Load goes to**
1 @ 0	5 1/2"	15/16"	964	1,437	**2,401**	SpotFtg Bm #20-1 (in a beam pocket in a 2x6 stud wall 10 ft tall (the default), on a (3)-stud pack -- no post cap)
2 @ 19'	5 1/2"	3/16"	294	218	**512**	SpotFtg Bm #20-2 (in a beam pocket in a 2x6 stud wall 10 ft tall (the default), on a (3)-stud pack -- no post cap)

Total = the governing ASD combination at that support ("up": the governing uplift, where another combination lifts it); the category columns are service loads.

Lateral Bracing	Bracing Intervals	Comments
Top Edge (Lu)	continuous	braced by the sheathing
Bottom Edge (Lu)	19' o/c	used for C_L only where the bottom edge is in compression

Vertical Loads	Location	Trib. Width	Dead (0.90)	Floor Live (1.00)	Comments
0 - Self Weight (PLF)	0 to 19'	N/A	18.4	--	
1 - Point (lb)	2' 6"	N/A	909.1	1,655	Linked from: Beam #19, Support 1

Shear, Moment and Deflection

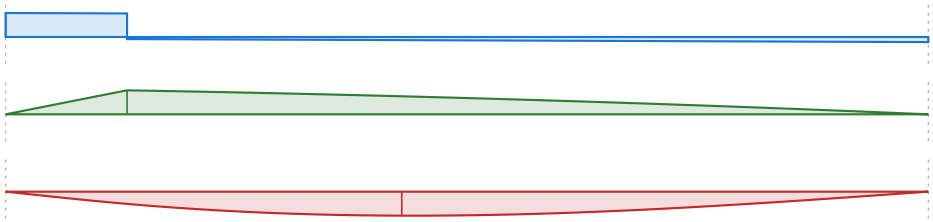

Shear (lbs)
D+L
max 2,401 @ 0

Moment (ft-lbs)
D+L
max 5,946 @ 2' 6"

Deflection (in)
D+L
0.1 in down @ 8' 1 7/8" (shear incl.)
limit 1.267 in on the span

Beam #21

(2) 1 3/4" x 18" 2.0E Microlam LVL (Weyerhaeuser)

Level: Floor - 1st Level | Member type: Beam (floor loads) | Length: 19' | 2018 IRC | 2018 NDS | ASD

PASSED

Controls: Shear 20% used

Section adequacy 80.2% (capacity to spare)

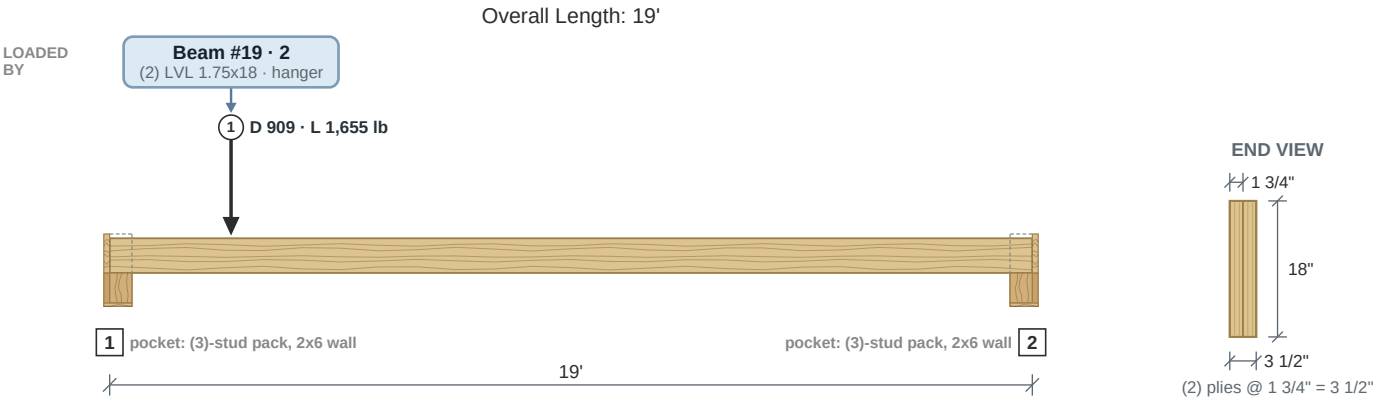

Drawing is conceptual. Locations are measured from the left end of the member; all dimensions are horizontal.

Design Results	Actual @ Location	Allowed	Result	LDF	Load Combination
Member Reaction (lbs)	2,401 @ 0	14,438 (5 1/2")	Passed (17% used)	--	
Plate Bearing (psi)	125 @ 0	668 (2x6 wall, DF-L #2)	Passed (19% used)	--	
Shear (lbs)	2,370 @ 1' 8 3/4"	11,970	Passed (20% used)	1.00	D+L
Moment (Ft-lbs)	5,946 @ 2' 6"	38,753	Passed (15% used)	1.00	D+L
Live Load Defl. (in)	0.054 @ 8' 1 7/8"	0.633	Passed (L/4,224)	--	L
Total Load Defl. (in)	0.1 @ 8' 1 7/8"	1.267	Passed (L/2,285)	--	D+L
Stud pack (lbs)	2,401 @ 0	20,007	Passed (12% used)	--	

- Deflection criteria: floor live alone L/360 (IRC Table R301.7); dead plus live L/180 (this member's own limit).
- Bending adjustment factors: CD = 1.00, CV = 0.946, CL = 1.00 (D+L).
- Beam stability: each moment checked against the bracing of its compression edge (CL = 1.00 where braced).
- Member self weight of 18.4 plf is included.
- Calculations per NDS 2018 and Weyerhaeuser ICC-ES ESR-1387, ASD, every load combination with its own load duration factor.

	Bearing Length		Loads to Supports (lbs)			
Supports	**Provided**	**Required**	**Dead**	**Floor Live**	**Total**	**Load goes to**
1 @ 0	5 1/2"	15/16"	964	1,437	**2,401**	SpotFtg Bm #21-1 (in a beam pocket in a 2x6 stud wall 10 ft tall (the default), on a (3)-stud pack -- no post cap)
2 @ 19'	5 1/2"	3/16"	294	218	**512**	SpotFtg Bm #21-2 (in a beam pocket in a 2x6 stud wall 10 ft tall (the default), on a (3)-stud pack -- no post cap)

Total = the governing ASD combination at that support ("up": the governing uplift, where another combination lifts it); the category columns are service loads.

Lateral Bracing	Bracing Intervals	Comments
Top Edge (Lu)	continuous	braced by the sheathing
Bottom Edge (Lu)	19' o/c	used for C_L only where the bottom edge is in compression

Vertical Loads	Location	Trib. Width	Dead (0.90)	Floor Live (1.00)	Comments
0 - Self Weight (PLF)	0 to 19'	N/A	18.4	--	
1 - Point (lb)	2' 6"	N/A	909.1	1,655	Linked from: Beam #19, Support 2

Shear, Moment and Deflection

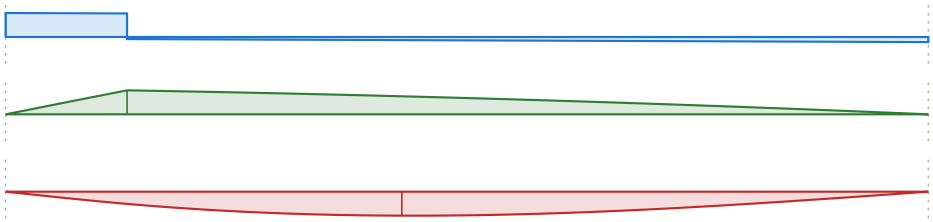

Shear (lbs)
D+L
max 2,401 @ 0

Moment (ft-lbs)
D+L
max 5,946 @ 2' 6"

Deflection (in)
D+L
0.1 in down @ 8' 1 7/8" (shear incl.)
limit 1.267 in on the span

Girder #1

2-ply roof girder truss (generic)

Level: Roof | Length: 16' | 2018 IRC | 2018 NDS | ASD

LOADS ONLY

Generic member for linked loads
no member size or design check

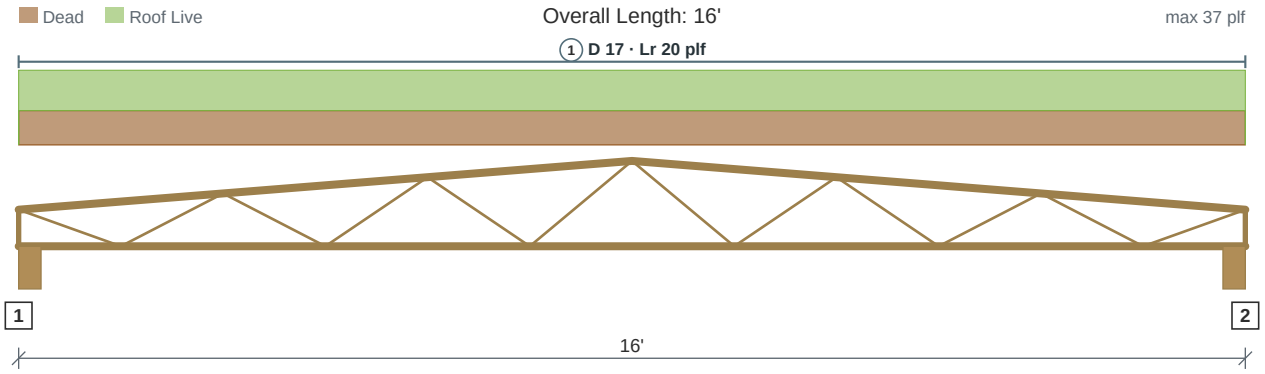

Drawing is conceptual. Locations are measured from the left end of the member; all dimensions are horizontal.

- A generic 2-ply roof girder truss, modeled so the loads it carries reach the members and walls that support it as linked loads. The size in the model is a placeholder, so no size or design check is shown; the girder truss itself is designed by the truss manufacturer.

	Loads to Supports (lbs)			
Supports	**Dead**	**Roof Live**	**Total**	**Load goes to**
1 @ 0	136	160	**296**	Header #3 (on top or in a hanger? not set -- checked as bearing on top)
2 @ 16'	136	160	**296**	SpotFtg Gdr #1-2 (in a 2x4 stud wall 10 ft tall (the default), on a stud pack (not sized: no check on this member) -- no post cap)

Total = the governing ASD combination at that support ("up": the governing uplift, where another combination lifts it); the category columns are service loads.

Vertical Loads	Location	Trib. Width	Dead (0.90)	Roof Live (1.25)	Comments
1 - Uniform (PLF)	0 to 16'	N/A	17	20	Typed on the member

Girder #2

2-ply roof girder truss (generic)

Level: Roof | Length: 22' | 2018 IRC | 2018 NDS | ASD

LOADS ONLY

Generic member for linked loads
no member size or design check

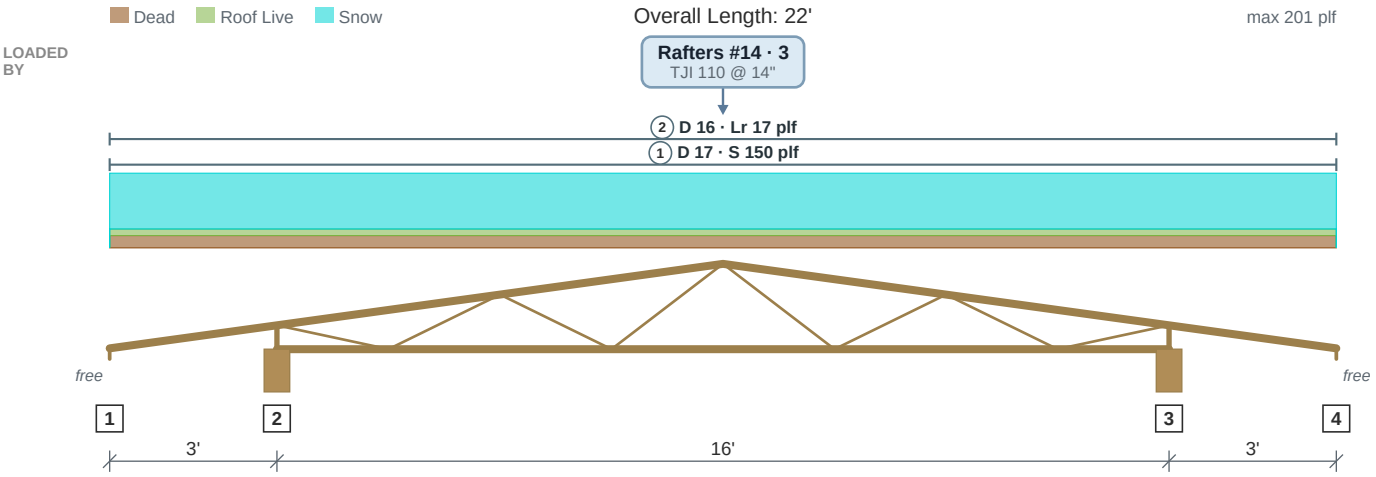

Drawing is conceptual. Locations are measured from the left end of the member; all dimensions are horizontal.

- A generic 2-ply roof girder truss, modeled so the loads it carries reach the members and walls that support it as linked loads. The size in the model is a placeholder, so no size or design check is shown; the girder truss itself is designed by the truss manufacturer.

	Loads to Supports (lbs)				
Supports	**Dead**	**Roof Live**	**Snow**	**Total**	**Load goes to**
1 @ 0	--	--	--	--	free end (cantilever tip)
2 @ 3'	364	192	1,650	**2,014**	Beam #10 (bears on top)
3 @ 19'	364	192	1,650	**2,014**	Beam #11 (bears on top)
4 @ 22'	--	--	--	--	free end (cantilever tip)

Total = the governing ASD combination at that support ("up": the governing uplift, where another combination lifts it); the category columns are service loads.

Vertical Loads	Location	Trib. Width	Dead (0.90)	Roof Live (1.25)	Snow (1.15)	Comments
1 - Uniform (PLF)	0 to 22'	N/A	17	--	150	Typed on the member
2 - Uniform (PLF)	0 to 22'	N/A	16.1	17.5	--	Linked from: Rafters #14, Support 3

Girder #3

2-ply roof girder truss (generic)

Level: Roof | Length: 15' | 2018 IRC | 2018 NDS | ASD

LOADS ONLY

Generic member for linked loads
no member size or design check

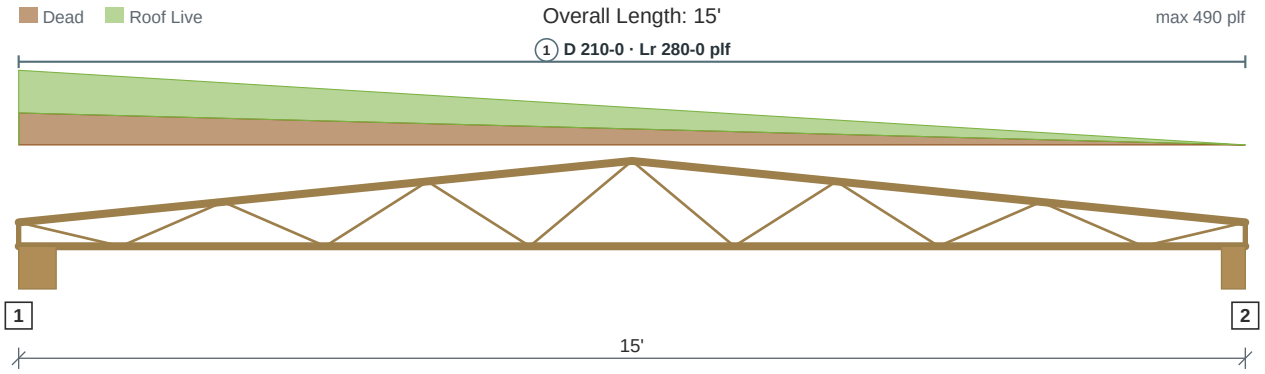

Drawing is conceptual. Locations are measured from the left end of the member; all dimensions are horizontal.

- A generic 2-ply roof girder truss, modeled so the loads it carries reach the members and walls that support it as linked loads. The size in the model is a placeholder, so no size or design check is shown; the girder truss itself is designed by the truss manufacturer.

	Loads to Supports (lbs)			
Supports	**Dead**	**Roof Live**	**Total**	**Load goes to**
1 @ 0	1,050	1,400	**2,450**	SpotFtg Bm #9-2 (in a 2x6 stud wall 10 ft tall (the default), on a stud pack (not sized: no check on this member) -- no post cap)
2 @ 15'	525	700	**1,225**	SpotFtg Gdr #3-2 (in a 2x4 stud wall 10 ft tall (the default), on a stud pack (not sized: no check on this member) -- no post cap)

Total = the governing ASD combination at that support ("up": the governing uplift, where another combination lifts it); the category columns are service loads.

Vertical Loads	Location	Trib. Width	Dead (0.90)	Roof Live (1.25)	Comments
1 - Trapezoidal (PLF)	0 to 15'	N/A	210 - 0	280 - 0	Typed on the member

Header #1

(2) 2x10 SPF No. 2 (1 1/2" x 9 1/4")

PASSED

Controls: Moment 69% used
Section adequacy 31.3% (capacity to spare)

Level: Headers - 1st Level | Member type: Header (roof loads) | Length: 10' 6 13/16" along the slope, king stud to king stud (raked 3:12) | 2018 IRC | 2018 NDS | ASD

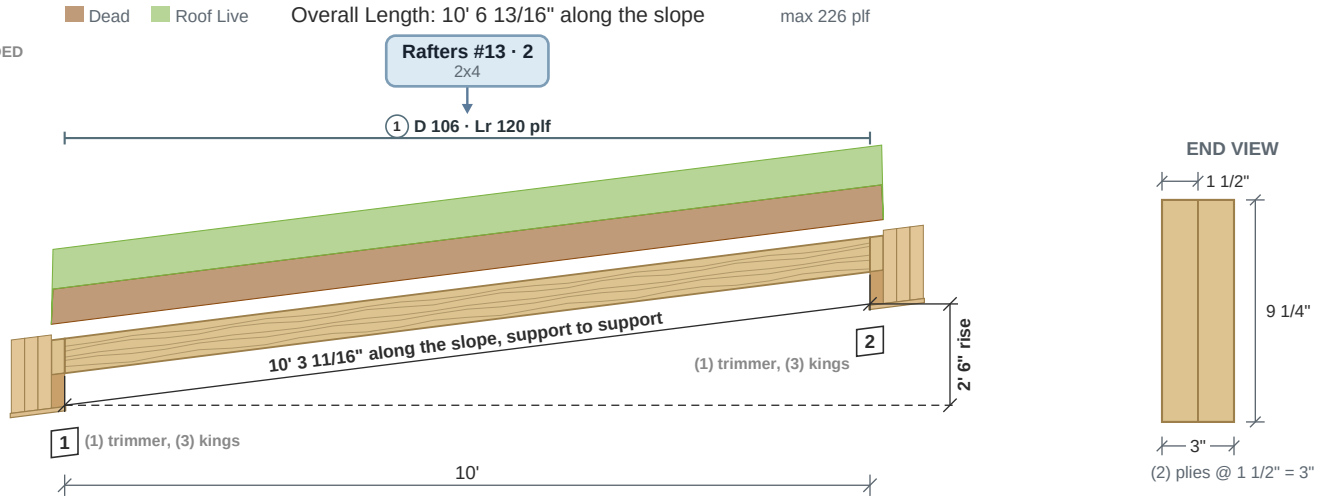

Drawing is conceptual; the slope is not to scale. Locations are measured from the left end of the member; dimensions are horizontal except its rise and its length along the slope.

Design Results	Actual @ Location	Allowed	Result	LDF	Load Combination
Member Reaction (lbs)	1,190 @ 0	1,912 (1 1/2")	Passed (62% used)	--	
Shear (lbs)	982 @ 9 1/4"	3,123	Passed (31% used)	1.25	D+Lr
Moment (Ft-lbs)	2,947 @ 5'	4,289	Passed (69% used)	1.25	D+Lr
Live Load Defl. (in)	0.107 @ 5'	0.519	Passed (L/1,167)	--	Lr
Total Load Defl. (in)	0.207 @ 5'	0.693	Passed (L/603)	--	D+Lr

- Deflection criteria: roof live or snow alone L/240 (IRC Table R301.7); dead plus live L/180 (this member's own limit).
- Raked at 3:12: the gravity loads act vertically over the 10' level span, so bending and shear are the level span's; the member's own weight is taken along its 10' 3 11/16" length on the slope; deflection is perpendicular to the member and limited on its length along the slope.
- Bending adjustment factors: CD = 1.25, CF = 1.10, CL = 1.00 (D+Lr).
- Beam stability: each moment checked against the bracing of its compression edge (CL = 1.00 where braced).
- Member self weight of 6.5 plf is included.
- Calculations per NDS 2018, ASD, every load combination with its own load duration factor.

	Bearing Length		Loads to Supports (lbs)			
Supports	**Provided**	**Required**	**Dead**	**Roof Live**	**Total**	**Load goes to**
1 @ 0	1 1/2"	15/16"	575	615	**1,190**	SpotFtg Hdr #1-1 (on (1) trimmer, (3) king studs)
2 @ 10'	1 1/2"	15/16"	575	615	**1,190**	SpotFtg Hdr #1-2 (on (1) trimmer, (3) king studs)

Total = the governing ASD combination at that support ("up": the governing uplift, where another combination lifts it); the category columns are service loads.

Lateral Bracing	Bracing Intervals	Comments
Top Edge (Lu)	continuous	braced by the sheathing
Bottom Edge (Lu)	10' o/c	used for C_L only where the bottom edge is in compression

Vertical Loads	Location	Trib. Width	Dead (0.90)	Roof Live (1.25)	Comments
0 - Self Weight (PLF)	0 to 10'	N/A	6.5	--	
1 - Uniform (PLF)	0 to 10'	N/A	105.6	120	Linked from: Rafters #13, Support 2

Shear, Moment and Deflection

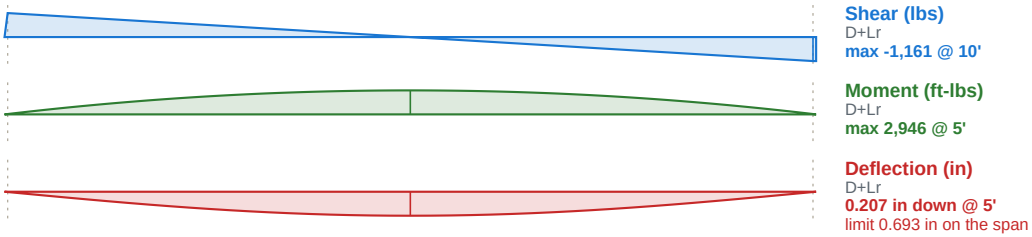

Shear (lbs)
D+Lr
max -1,161 @ 10'

Moment (ft-lbs)
D+Lr
max 2,946 @ 5'

Deflection (in)
D+Lr
0.207 in down @ 5'
limit 0.693 in on the span

Header #2

(1) 4x8 SP No. 2 (3 1/2" x 7 1/4")

Level: Headers - 1st Level | Member type: Header (roof loads) | Length: 3' | 2018 IRC | 2018 NDS | ASD

PASSED

Controls: Bearing 35% used

Section adequacy 64.6% (capacity to spare)

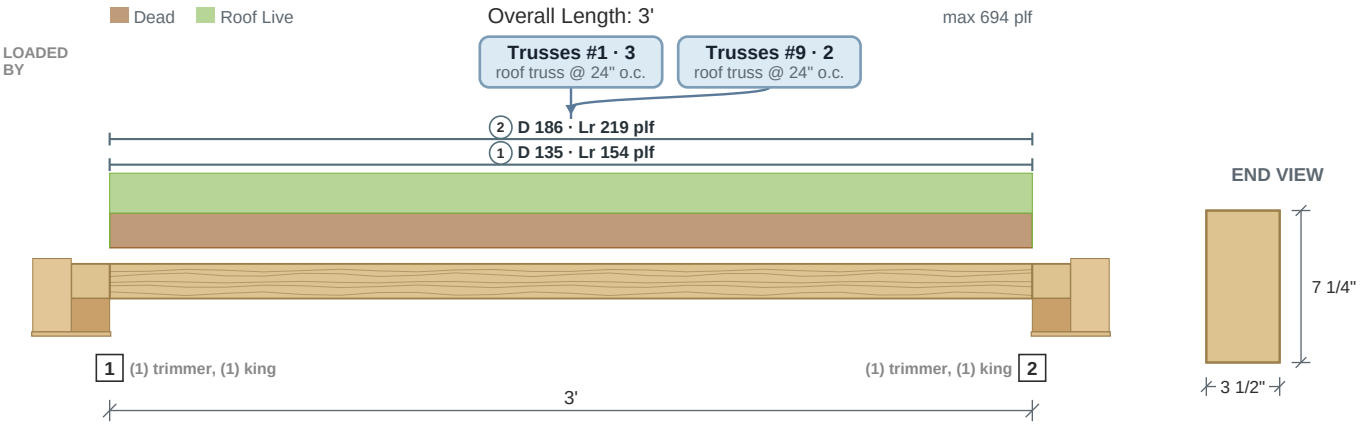

Drawing is conceptual. Locations are measured from the left end of the member; all dimensions are horizontal.

Design Results	Actual @ Location	Allowed	Result	LDF	Load Combination
Member Reaction (lbs)	1,050 @ 0	2,966 (1 1/2")	Passed (35% used)	--	
Shear (lbs)	627 @ 7 1/4"	3,701	Passed (17% used)	1.25	D+Lr
Moment (Ft-lbs)	811 @ 1' 6"	3,250	Passed (25% used)	1.25	D+Lr
Live Load Defl. (in)	0.005 @ 1' 6"	0.152	Passed (L/7,884)	--	Lr
Total Load Defl. (in)	0.009 @ 1' 6"	0.203	Passed (L/4,202)	--	D+Lr

- Deflection criteria: roof live or snow alone L/240 (IRC Table R301.7); dead plus live L/180 (this member's own limit).
- Bending adjustment factors: CD = 1.25, CL = 1.00 (D+Lr).
- Beam stability: each moment checked against the bracing of its compression edge (CL = 1.00 where braced).
- Member self weight of 5.8 plf is included.
- Calculations per NDS 2018, ASD, every load combination with its own load duration factor.

	Bearing Length		Loads to Supports (lbs)			
Supports	**Provided**	**Required**	**Dead**	**Roof Live**	**Total**	**Load goes to**
1 @ 0	1 1/2"	1/2"	491	560	**1,050**	Header #19 (on (1) trimmer, (1) king stud)
2 @ 3'	1 1/2"	1/2"	491	560	**1,050**	Header #19 (on (1) trimmer, (1) king stud)

Total = the governing ASD combination at that support ("up": the governing uplift, where another combination lifts it); the category columns are service loads.

Lateral Bracing	Bracing Intervals	Comments
Top Edge (Lu)	continuous	braced by the sheathing
Bottom Edge (Lu)	3' o/c	used for C_L only where the bottom edge is in compression

Vertical Loads	Location	Trib. Width	Dead (0.90)	Roof Live (1.25)	Comments
0 - Self Weight (PLF)	0 to 3'	N/A	5.8	--	
1 - Uniform (PLF)	0 to 3'	N/A	135.3	154.4	Linked from: Trusses #1, Support 3
2 - Uniform (PLF)	0 to 3'	N/A	186	218.8	Linked from: Trusses #9, Support 2

Shear, Moment and Deflection

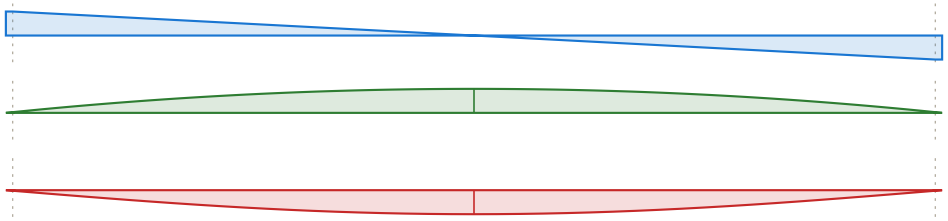

Shear (lbs)
D+Lr
max 1,050 @ left bearing

Moment (ft-lbs)
D+Lr
max 811 @ 1' 6"

Deflection (in)
D+Lr
0.009 in down @ 1' 6"
limit 0.203 in on the span

Header #3

(1) 4x10 SP No. 2 (3 1/2" x 9 1/4")

Level: Headers - 1st Level | Member type: Header (roof loads) | Length: 7' 3" | 2018 IRC | 2018 NDS | ASD

PASSED

Controls: Moment 60% used

Section adequacy 40.5% (capacity to spare)

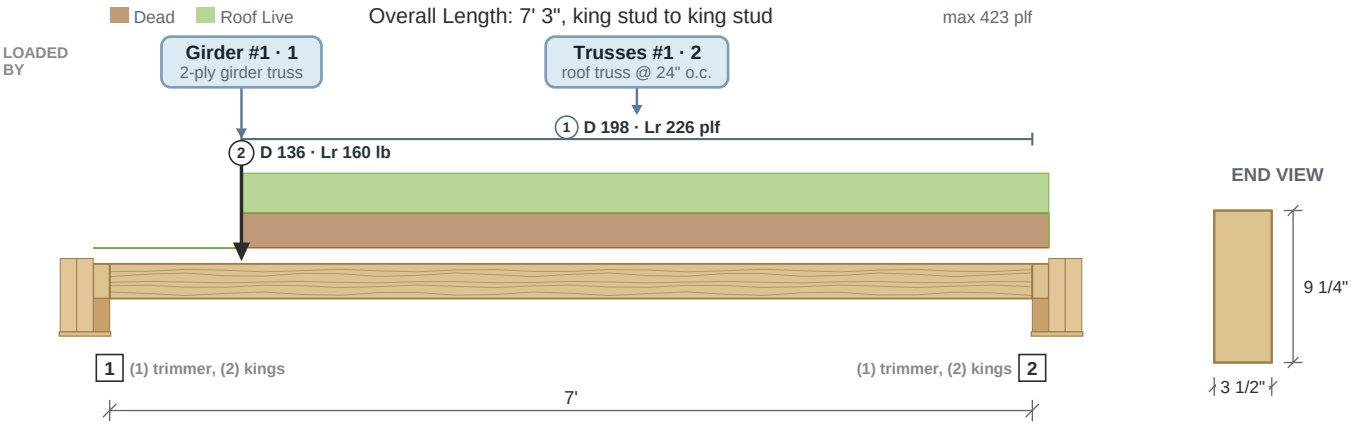

Drawing is conceptual. Locations are measured from the left end of the member; all dimensions are horizontal.

Design Results	Actual @ Location	Allowed	Result	LDF	Load Combination
Member Reaction (lbs)	1,571 @ 7'	2,966 (1 1/2")	Passed (53% used)	--	
Shear (lbs)	1,364 @ 9 1/4"	4,722	Passed (29% used)	1.25	D+Lr
Moment (Ft-lbs)	2,724 @ 3' 5 5/8"	4,575	Passed (60% used)	1.25	D+Lr
Live Load Defl. (in)	0.04 @ 3' 5 5/8"	0.353	Passed (L/2,131)	--	Lr
Total Load Defl. (in)	0.076 @ 3' 5 5/8"	0.471	Passed (L/1,118)	--	D+Lr

- Deflection criteria: roof live or snow alone L/240 (IRC Table R301.7); dead plus live L/180 (this member's own limit).
- Bending adjustment factors: CD = 1.25, CL = 1.00 (D+Lr).
- Beam stability: each moment checked against the bracing of its compression edge (CL = 1.00 where braced).
- Member self weight of 7.4 plf is included.
- Calculations per NDS 2018, ASD, every load combination with its own load duration factor.

	Bearing Length		Loads to Supports (lbs)			
Supports	Provided	Required	Dead	Roof Live	Total	Load goes to
1 @ 0	1 1/2"	11/16"	652	718	**1,370**	SpotFtg Hdr #3-1 (on (1) trimmer, (2) king studs)
2 @ 7'	1 1/2"	13/16"	748	824	**1,571**	SpotFtg Hdr #3-2 (on (1) trimmer, (2) king studs)

Total = the governing ASD combination at that support ("up": the governing uplift, where another combination lifts it); the category columns are service loads.

Lateral Bracing	Bracing Intervals	Comments
Top Edge (Lu)	continuous	braced by the sheathing
Bottom Edge (Lu)	7' o/c	used for C_L only where the bottom edge is in compression

Vertical Loads	Location	Trib. Width	Dead (0.90)	Roof Live (1.25)	Comments
0 - Self Weight (PLF)	0 to 7'	N/A	7.4	--	
1 - Uniform (PLF)	1' to 7'	N/A	197.6	225.6	Linked from: Trusses #1, Support 2
2 - Point (lb)	1'	N/A	136	160	Linked from: Girder #1, Support 1

Shear, Moment and Deflection

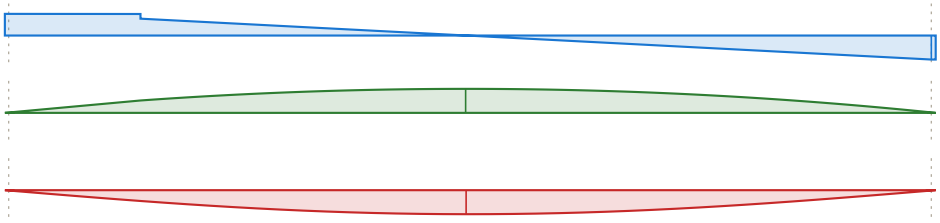

Shear (lbs)
D+Lr
max -1,518 @ 7'

Moment (ft-lbs)
D+Lr
max 2,725 @ 3' 5 5/8"

Deflection (in)
D+Lr
0.076 in down @ 3' 5 5/8"
limit 0.471 in on the span

Header #4

(1) 4x8 SP No. 2 (3 1/2" x 7 1/4")

Level: Headers - 1st Level | Member type: Header (roof loads) | Length: 5' 9" | 2018 IRC | 2018 NDS | ASD

PASSED

Controls: Moment 69% used

Section adequacy 30.9% (capacity to spare)

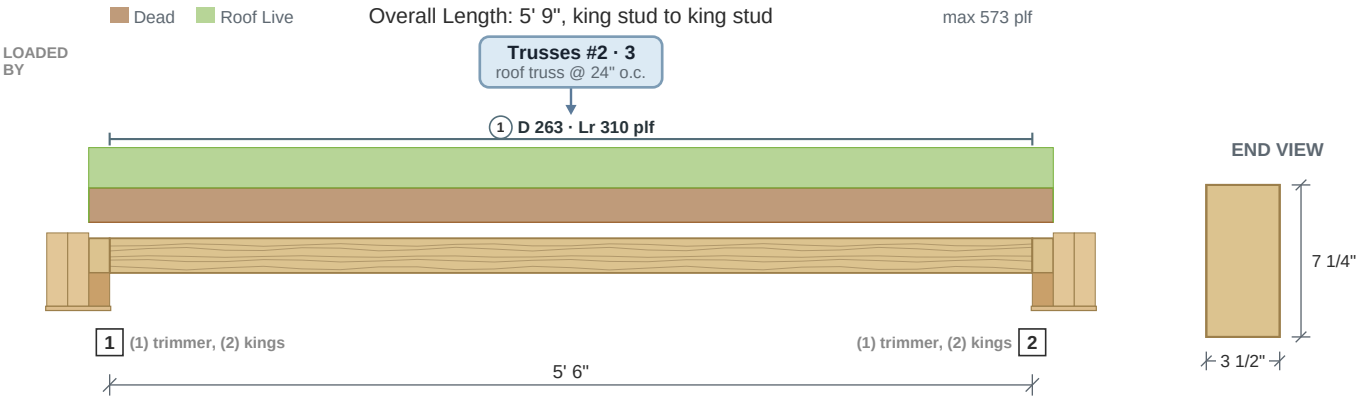

Drawing is conceptual. Locations are measured from the left end of the member; all dimensions are horizontal.

Design Results	Actual @ Location	Allowed	Result	LDF	Load Combination
Member Reaction (lbs)	1,665 @ 0	2,966 (1 1/2")	Passed (56% used)	--	
Shear (lbs)	1,242 @ 4' 10 3/4"	3,701	Passed (34% used)	1.25	D+Lr
Moment (Ft-lbs)	2,245 @ 2' 9"	3,250	Passed (69% used)	1.25	D+Lr
Live Load Defl. (in)	0.043 @ 2' 9"	0.279	Passed (L/1,550)	--	Lr
Total Load Defl. (in)	0.081 @ 2' 9"	0.371	Passed (L/829)	--	D+Lr

- Deflection criteria: roof live or snow alone L/240 (IRC Table R301.7); dead plus live L/180 (this member's own limit).
- Bending adjustment factors: CD = 1.25, CL = 1.00 (D+Lr).
- Beam stability: each moment checked against the bracing of its compression edge (CL = 1.00 where braced).
- Member self weight of 5.8 plf is included.
- Calculations per NDS 2018, ASD, every load combination with its own load duration factor.

	Bearing Length		Loads to Supports (lbs)			
Supports	Provided	Required	Dead	Roof Live	Total	Load goes to
1 @ 0	1 1/2"	13/16"	774	891	**1,665**	SpotFtg Hdr #4-1 (on (1) trimmer, (2) king studs)
2 @ 5' 6"	1 1/2"	13/16"	774	891	**1,665**	SpotFtg Hdr #4-2 (on (1) trimmer, (2) king studs)

Total = the governing ASD combination at that support ("up": the governing uplift, where another combination lifts it); the category columns are service loads.

Lateral Bracing	Bracing Intervals	Comments
Top Edge (Lu)	continuous	braced by the sheathing
Bottom Edge (Lu)	5' 6" o/c	used for C_L only where the bottom edge is in compression

Vertical Loads	Location	Trib. Width	Dead (0.90)	Roof Live (1.25)	Comments
0 - Self Weight (PLF)	0 to 5' 6"	N/A	5.8	--	
1 - Uniform (PLF)	0 to 5' 6"	N/A	263.4	309.9	Linked from: Trusses #2, Support 3

Shear, Moment and Deflection

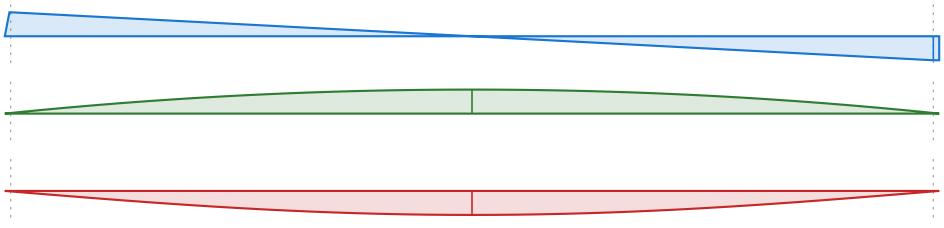

Shear (lbs)
D+Lr
max -1,592 @ 5' 6"

Moment (ft-lbs)
D+Lr
max 2,245 @ 2' 9"

Deflection (in)
D+Lr
0.081 in down @ 2' 9"
limit 0.371 in on the span

Header #5

(1) 4x8 SP No. 2 (3 1/2" x 7 1/4")

Level: Headers - 1st Level | Member type: Header (roof loads) | Length: 5' 9" | 2018 IRC | 2018 NDS | ASD

PASSED

Controls: Moment 23% used
Section adequacy 76.6% (capacity to spare)

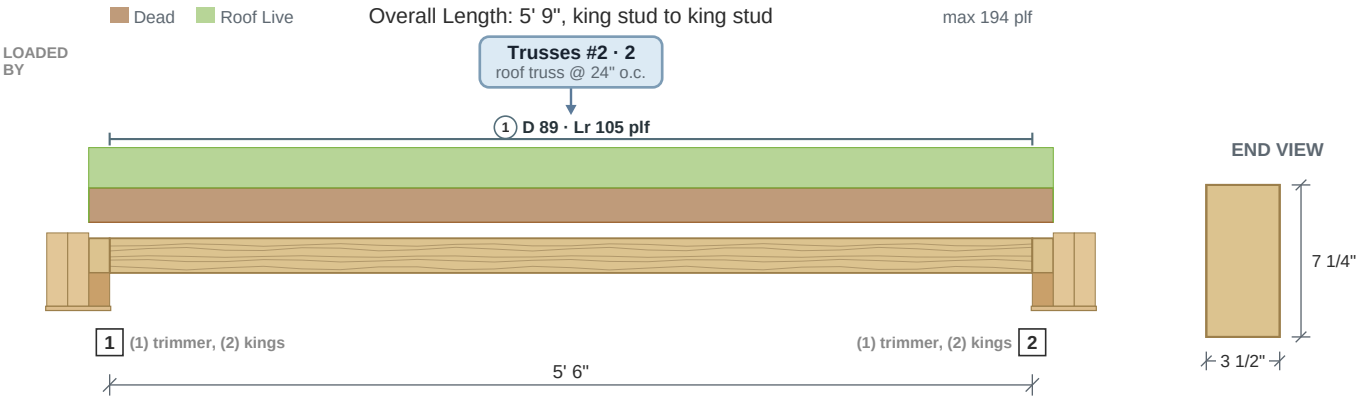

Drawing is conceptual. Locations are measured from the left end of the member; all dimensions are horizontal.

Design Results	Actual @ Location	Allowed	Result	LDF	Load Combination
Member Reaction (lbs)	573 @ 0	2,966 (1 1/2")	Passed (19% used)	--	
Shear (lbs)	428 @ 7 1/4"	3,701	Passed (12% used)	1.25	D+Lr
Moment (Ft-lbs)	761 @ 2' 9"	3,250	Passed (23% used)	1.25	D+Lr
Live Load Defl. (in)	0.014 @ 2' 9"	0.276	Passed (L/4,703)	--	Lr
Total Load Defl. (in)	0.027 @ 2' 9"	0.368	Passed (L/2,469)	--	D+Lr

- Deflection criteria: roof live or snow alone L/240 (IRC Table R301.7); dead plus live L/180 (this member's own limit).
- Bending adjustment factors: CD = 1.25, CL = 1.00 (D+Lr).
- Beam stability: each moment checked against the bracing of its compression edge (CL = 1.00 where braced).
- Member self weight of 5.8 plf is included.
- Calculations per NDS 2018, ASD, every load combination with its own load duration factor.

	Bearing Length		Loads to Supports (lbs)			
Supports	Provided	Required	Dead	Roof Live	Total	Load goes to
1 @ 0	1 1/2"	5/16"	272	301	**573**	SpotFtg Hdr #5-1 (on (1) trimmer, (2) king studs)
2 @ 5' 6"	1 1/2"	5/16"	272	301	**573**	SpotFtg Hdr #5-2 (on (1) trimmer, (2) king studs)

Total = the governing ASD combination at that support ("up": the governing uplift, where another combination lifts it); the category columns are service loads.

Lateral Bracing	Bracing Intervals	Comments
Top Edge (Lu)	continuous	braced by the sheathing
Bottom Edge (Lu)	5' 6" o/c	used for C_L only where the bottom edge is in compression

Vertical Loads	Location	Trib. Width	Dead (0.90)	Roof Live (1.25)	Comments
0 - Self Weight (PLF)	0 to 5' 6"	N/A	5.8	--	
1 - Uniform (PLF)	0 to 5' 6"	N/A	89	104.7	Linked from: Trusses #2, Support 2

Shear, Moment and Deflection

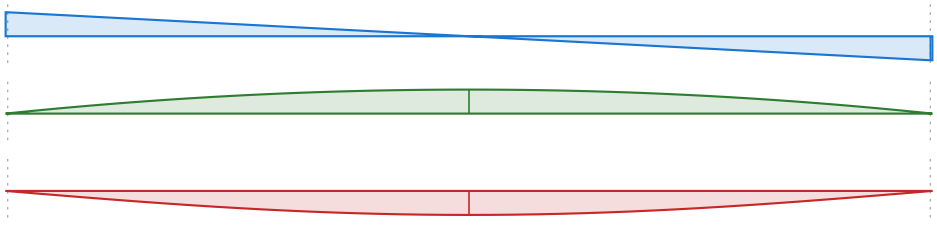

Shear (lbs)
D+Lr
max -548 @ 5' 6"

Moment (ft-lbs)
D+Lr
max 761 @ 2' 9"

Deflection (in)
D+Lr
0.027 in down @ 2' 9"
limit 0.368 in on the span

Header #6

(1) 4x8 SP No. 2 (3 1/2" x 7 1/4")

Level: Headers - 1st Level | Member type: Header (roof loads) | Length: 3' 3" | 2018 IRC | 2018 NDS | ASD

PASSED

Controls: Bearing 35% used
Section adequacy 64.6% (capacity to spare)

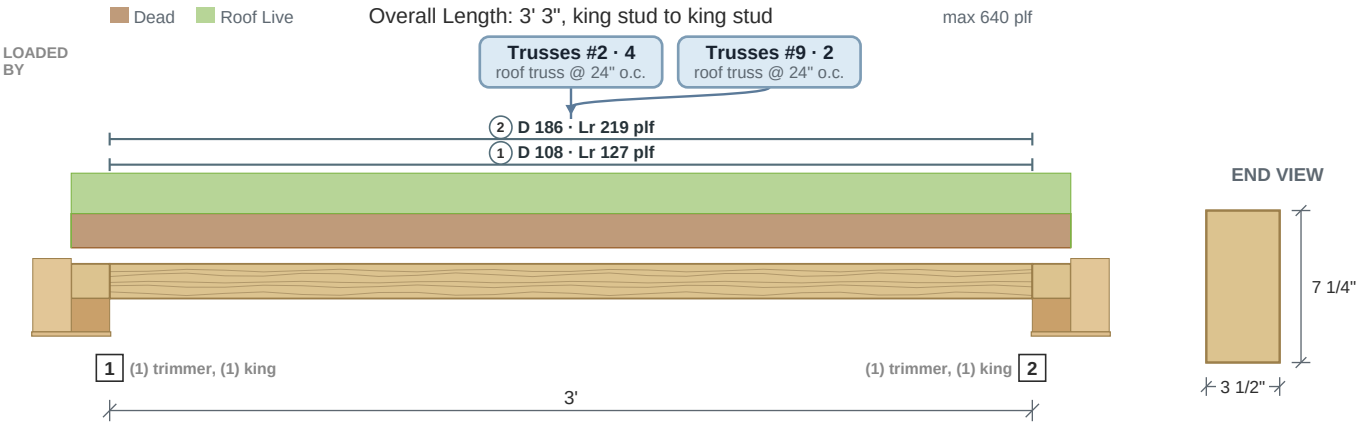

Drawing is conceptual. Locations are measured from the left end of the member; all dimensions are horizontal.

Design Results	Actual @ Location	Allowed	Result	LDF	Load Combination
Member Reaction (lbs)	1,050 @ 0	2,966 (1 1/2")	Passed (35% used)	--	
Shear (lbs)	579 @ 7 1/4"	3,701	Passed (16% used)	1.25	D+Lr
Moment (Ft-lbs)	748 @ 1' 6"	3,250	Passed (23% used)	1.25	D+Lr
Live Load Defl. (in)	0.004 @ 1' 6"	0.152	Passed (L/8,500)	--	Lr
Total Load Defl. (in)	0.008 @ 1' 6"	0.203	Passed (L/4,554)	--	D+Lr

- Deflection criteria: roof live or snow alone L/240 (IRC Table R301.7); dead plus live L/180 (this member's own limit).
- Bending adjustment factors: CD = 1.25, CL = 1.00 (D+Lr).
- Beam stability: each moment checked against the bracing of its compression edge (CL = 1.00 where braced).
- Member self weight of 5.8 plf is included.
- Calculations per NDS 2018, ASD, every load combination with its own load duration factor.

	Bearing Length		Loads to Supports (lbs)			
Supports	Provided	Required	Dead	Roof Live	Total	Load goes to
1 @ 0	1 1/2"	1/2"	488	562	**1,050**	SpotFtg Hdr #6-1 (on (1) trimmer, (1) king stud)
2 @ 3'	1 1/2"	1/2"	488	562	**1,050**	SpotFtg Hdr #6-2 (on (1) trimmer, (1) king stud)

Total = the governing ASD combination at that support ("up": the governing uplift, where another combination lifts it); the category columns are service loads.

Lateral Bracing	Bracing Intervals	Comments
Top Edge (Lu)	continuous	braced by the sheathing
Bottom Edge (Lu)	3' o/c	used for C_L only where the bottom edge is in compression

Vertical Loads	Location	Trib. Width	Dead (0.90)	Roof Live (1.25)	Comments
0 - Self Weight (PLF)	0 to 3'	N/A	5.8	--	
1 - Uniform (PLF)	0 to 3'	N/A	108.2	127.3	Linked from: Trusses #2, Support 4
2 - Uniform (PLF)	0 to 3'	N/A	186	218.8	Linked from: Trusses #9, Support 2

Shear, Moment and Deflection

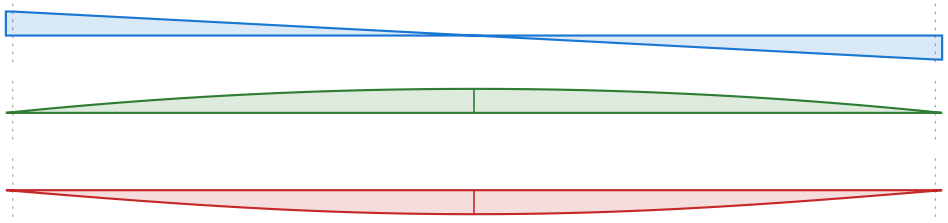

Shear (lbs)
D+Lr
max 969 @ left bearing

Moment (ft-lbs)
D+Lr
max 748 @ 1' 6"

Deflection (in)
D+Lr
0.008 in down @ 1' 6"
limit 0.203 in on the span

Header #7

(1) 4x10 SP No. 2 (3 1/2" x 9 1/4")

Level: Headers - 1st Level | Member type: Header (roof loads) | Length: 7' 1 1/2" | 2018 IRC | 2018 NDS | ASD

PASSED

Controls: Moment 57% used
Section adequacy 42.8% (capacity to spare)

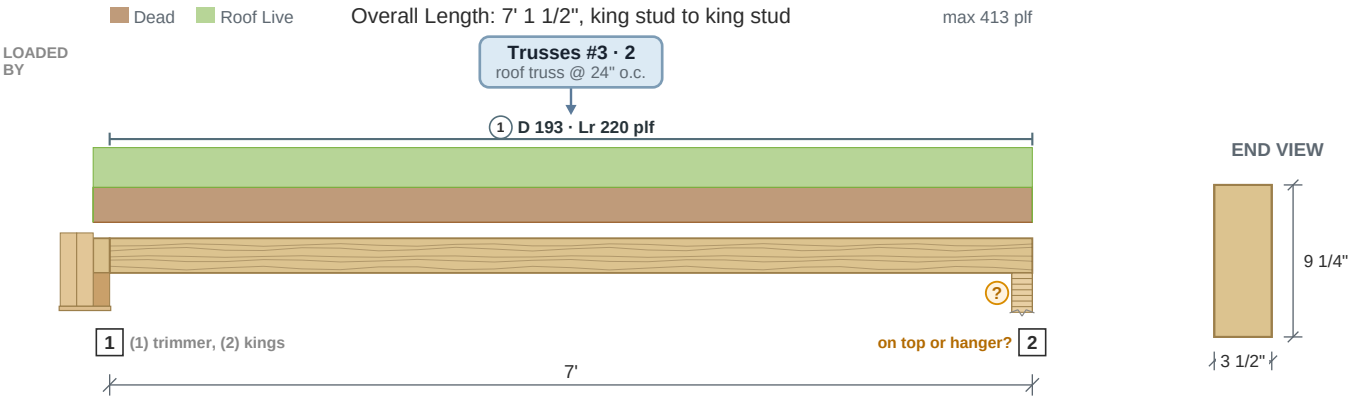

Drawing is conceptual. Locations are measured from the left end of the member; all dimensions are horizontal.

Design Results	Actual @ Location	Allowed	Result	LDF	Load Combination
Member Reaction (lbs)	1,522 @ 0	2,966 (1 1/2")	Passed (51% used)	--	
Shear (lbs)	1,470 @ 7'	4,722	Passed (31% used)	1.25	D+Lr
Moment (Ft-lbs)	2,619 @ 3' 6"	4,575	Passed (57% used)	1.25	D+Lr
Live Load Defl. (in)	0.038 @ 3' 6"	0.353	Passed (L/2,224)	--	Lr
Total Load Defl. (in)	0.073 @ 3' 6"	0.471	Passed (L/1,165)	--	D+Lr

- Deflection criteria: roof live or snow alone L/240 (IRC Table R301.7); dead plus live L/180 (this member's own limit).
- Bending adjustment factors: CD = 1.25, CL = 1.00 (D+Lr).
- Beam stability: each moment checked against the bracing of its compression edge (CL = 1.00 where braced).
- Member self weight of 7.4 plf is included.
- Calculations per NDS 2018, ASD, every load combination with its own load duration factor.

	Bearing Length		Loads to Supports (lbs)			
Supports	Provided	Required	Dead	Roof Live	Total	Load goes to
1 @ 0	1 1/2"	3/4"	725	797	**1,522**	SpotFtg Hdr #7-1 (on (1) trimmer, (2) king studs)
2 @ 7'	5 1/2"	3/4"	700	770	**1,470**	Beam #10 (on top or in a hanger? not set -- checked as bearing on top)

Total = the governing ASD combination at that support ("up": the governing uplift, where another combination lifts it); the category columns are service loads.

Lateral Bracing	Bracing Intervals	Comments
Top Edge (Lu)	continuous	braced by the sheathing
Bottom Edge (Lu)	7' o/c	used for C_L only where the bottom edge is in compression

Vertical Loads	Location	Trib. Width	Dead (0.90)	Roof Live (1.25)	Comments
0 - Self Weight (PLF)	0 to 7'	N/A	7.4	--	
1 - Uniform (PLF)	0 to 7'	N/A	192.7	220	Linked from: Trusses #3, Support 2

Shear, Moment and Deflection

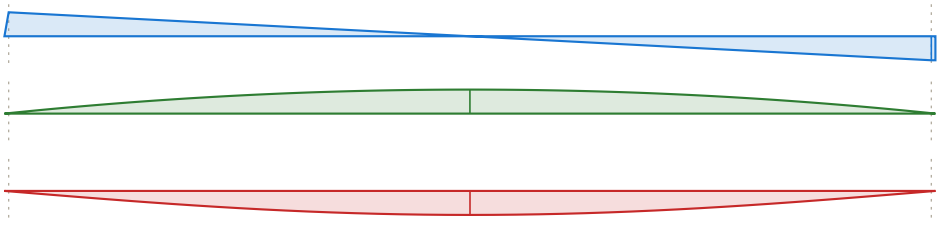

Shear (lbs)
D+Lr
max -1,470 @ 7'

Moment (ft-lbs)
D+Lr
max 2,619 @ 3' 6"

Deflection (in)
D+Lr
0.073 in down @ 3' 6"
limit 0.471 in on the span

Header #8

(1) 4x10 SP No. 2 (3 1/2" x 9 1/4")

PASSED

Controls: Moment 67% used
Section adequacy 33% (capacity to spare)

Level: Headers - 1st Level | Member type: Header (roof loads) | Length: 10' 3 11/16" along the slope, king stud to king stud (raked 3:12) | 2018 IRC | 2018 NDS | ASD

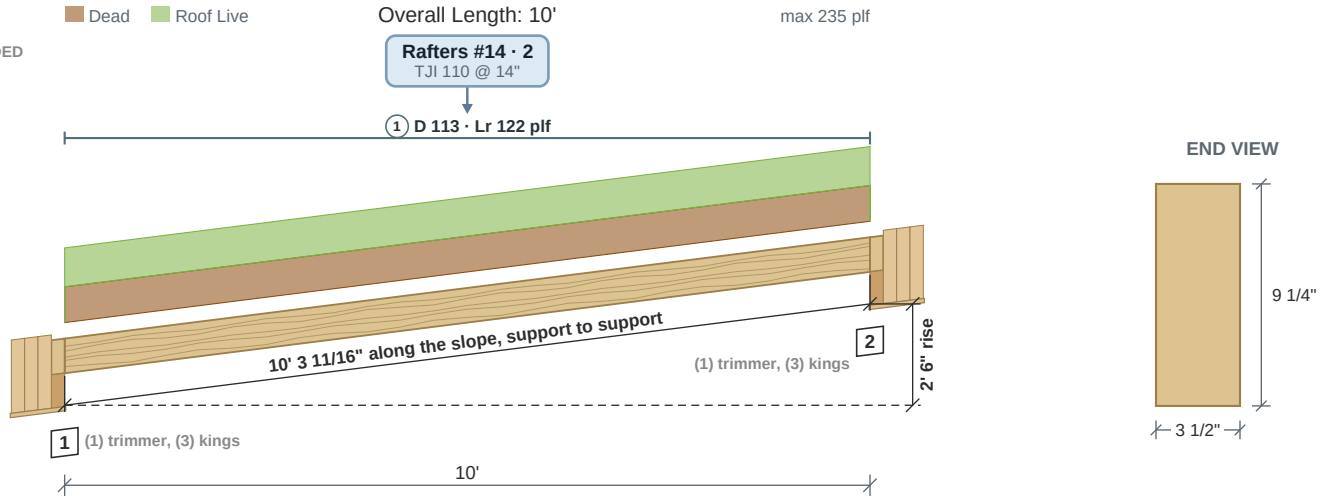

Drawing is conceptual; the slope is not to scale. Locations are measured from the left end of the member; dimensions are horizontal except its rise and its length along the slope.

Design Results	Actual @ Location	Allowed	Result	LDF	Load Combination
Member Reaction (lbs)	1,214 @ 0	2,966 (1 1/2")	Passed (41% used)	--	
Shear (lbs)	1,027 @ 9 1/4"	4,722	Passed (22% used)	1.25	D+Lr
Moment (Ft-lbs)	3,066 @ 5'	4,575	Passed (67% used)	1.25	D+Lr
Live Load Defl. (in)	0.092 @ 5'	0.518	Passed (L/1,344)	--	Lr
Total Load Defl. (in)	0.183 @ 5'	0.691	Passed (L/678)	--	D+Lr

- Deflection criteria: roof live or snow alone L/240 (IRC Table R301.7); dead plus live L/180 (this member's own limit).
- Raked at 3:12: the gravity loads act vertically over the 10' level span, so bending and shear are the level span's; the member's own weight is taken along its 10' 3 11/16" length on the slope; deflection is perpendicular to the member and limited on its length along the slope.
- Bending adjustment factors: CD = 1.25, CL = 1.00 (D+Lr).
- Beam stability: each moment checked against the bracing of its compression edge (CL = 1.00 where braced).
- Member self weight of 7.6 plf is included.
- Calculations per NDS 2018, ASD, every load combination with its own load duration factor.

	Bearing Length		Loads to Supports (lbs)			
Supports	Provided	Required	Dead	Roof Live	Total	Load goes to
1 @ 0	1 1/2"	5/8"	602	612	**1,214**	Beam #12 (on (1) trimmer, (3) king studs)
2 @ 10'	1 1/2"	5/8"	602	612	**1,214**	Beam #12 (on (1) trimmer, (3) king studs)

Total = the governing ASD combination at that support ("up": the governing uplift, where another combination lifts it); the category columns are service loads.

Lateral Bracing	Bracing Intervals	Comments
Top Edge (Lu)	continuous	braced by the sheathing
Bottom Edge (Lu)	10' o/c	used for C_L only where the bottom edge is in compression

Vertical Loads	Location	Trib. Width	Dead (0.90)	Roof Live (1.25)	Comments
0 - Self Weight (PLF)	0 to 10'	N/A	7.6	--	
1 - Uniform (PLF)	0 to 10'	N/A	112.7	122.5	Linked from: Rafters #14, Support 2

Shear, Moment and Deflection

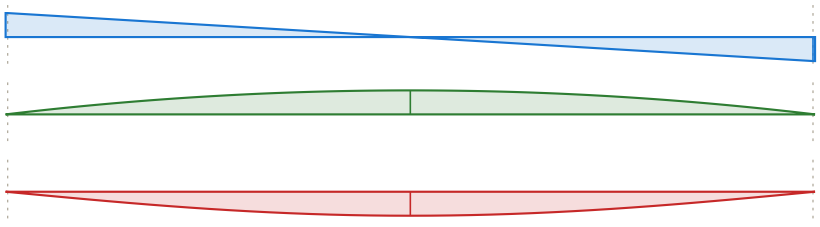

Shear (lbs)
D+Lr
max -1,214 @ 10'

Moment (ft-lbs)
D+Lr
max 3,066 @ 5'

Deflection (in)
D+Lr
0.183 in down @ 5'
limit 0.691 in on the span

Header #9

(3) 2x12 SP No. 2 (1 1/2" x 11 1/4")

PASSED

Controls: Moment 64% used
Section adequacy 35.6% (capacity to spare)

Level: Headers - 1st Level | Member type: Header (roof loads) | Length: 13' 1 11/16" along the slope, king stud to king stud (raked 3:12) | 2018 IRC | 2018 NDS | ASD

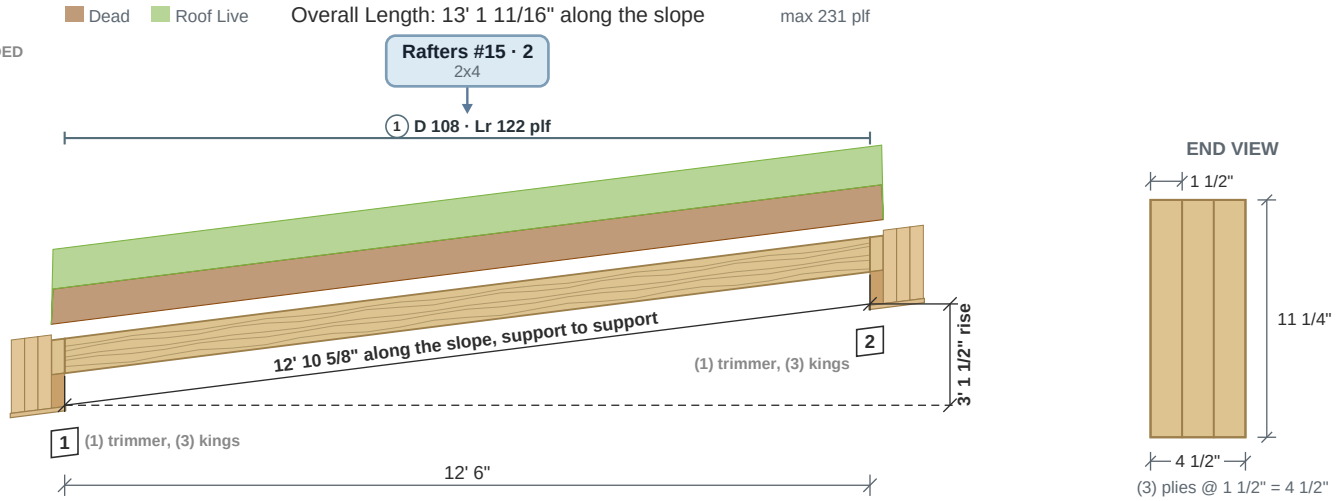

Drawing is conceptual; the slope is not to scale. Locations are measured from the left end of the member; dimensions are horizontal except its rise and its length along the slope.

Design Results	Actual @ Location	Allowed	Result	LDF	Load Combination
Member Reaction (lbs)	1,546 @ 0	3,814 (1 1/2")	Passed (41% used)	--	
Shear (lbs)	1,288 @ 11 1/4"	7,384	Passed (17% used)	1.25	D+Lr
Moment (Ft-lbs)	4,775 @ 6' 3"	7,416	Passed (64% used)	1.25	D+Lr
Live Load Defl. (in)	0.097 @ 6' 3"	0.647	Passed (L/1,597)	--	Lr
Total Load Defl. (in)	0.192 @ 6' 3"	0.862	Passed (L/807)	--	D+Lr

- Deflection criteria: roof live or snow alone L/240 (IRC Table R301.7); dead plus live L/180 (this member's own limit).
- Raked at 3:12: the gravity loads act vertically over the 12' 6" level span, so bending and shear are the level span's; the member's own weight is taken along its 12' 10 5/8" length on the slope; deflection is perpendicular to the member and limited on its length along the slope.
- Bending adjustment factors: CD = 1.25, CL = 1.00 (D+Lr).
- Beam stability: each moment checked against the bracing of its compression edge (CL = 1.00 where braced).
- Member self weight of 11.9 plf is included.
- Calculations per NDS 2018, ASD, every load combination with its own load duration factor.

	Bearing Length		Loads to Supports (lbs)			
Supports	Provided	Required	Dead	Roof Live	Total	Load goes to
1 @ 0	1 1/2"	5/8"	765	781	**1,546**	SpotFtg Hdr 9-1 (on (1) trimmer, (3) king studs)
2 @ 12' 6"	1 1/2"	5/8"	765	781	**1,546**	SpotFtg Hdr #9-2 (on (1) trimmer, (3) king studs)

Total = the governing ASD combination at that support ("up": the governing uplift, where another combination lifts it); the category columns are service loads.

Lateral Bracing	Bracing Intervals	Comments
Top Edge (Lu)	continuous	braced by the sheathing
Bottom Edge (Lu)	12' 6" o/c	used for C_L only where the bottom edge is in compression

Vertical Loads	Location	Trib. Width	Dead (0.90)	Roof Live (1.25)	Comments
0 - Self Weight (PLF)	0 to 12' 6"	N/A	11.9	--	
1 - Uniform (PLF)	0 to 12' 6"	N/A	108.1	122.5	Linked from: Rafters #15, Support 2

Shear, Moment and Deflection

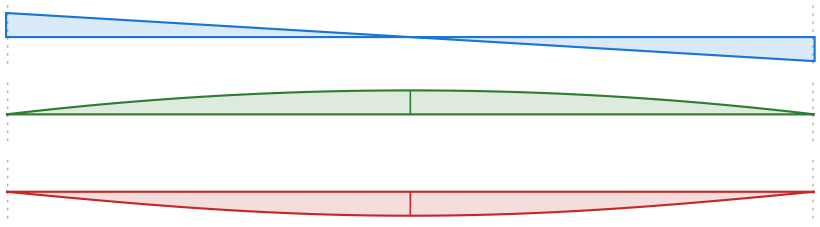

Shear (lbs)
D+Lr
max 1,516 @ left bearing

Moment (ft-lbs)
D+Lr
max 4,775 @ 6' 3"

Deflection (in)
D+Lr
0.192 in down @ 6' 3"
limit 0.862 in on the span

Header #10

(3) 2x12 SP No. 2 (1 1/2" x 11 1/4")

Level: Headers - 1st Level | Member type: Header (roof loads) | Length: 12' 9" | 2018 IRC | 2018 NDS | ASD

PASSED

Controls: Moment 64% used

Section adequacy 36.4% (capacity to spare)

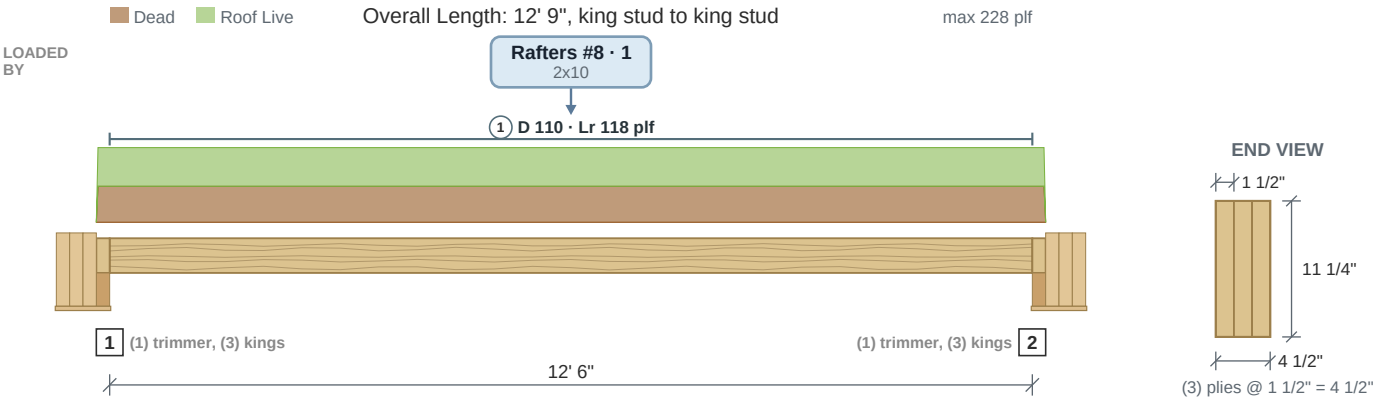

Drawing is conceptual. Locations are measured from the left end of the member; all dimensions are horizontal.

Design Results	Actual @ Location	Allowed	Result	LDF	Load Combination
Member Reaction (lbs)	1,527 @ 0	3,814 (1 1/2")	Passed (40% used)	--	
Shear (lbs)	1,272 @ 11 1/4"	7,384	Passed (17% used)	1.25	D+Lr
Moment (Ft-lbs)	4,716 @ 6' 3"	7,416	Passed (64% used)	1.25	D+Lr
Live Load Defl. (in)	0.088 @ 6' 3"	0.628	Passed (L/1,706)	--	Lr
Total Load Defl. (in)	0.179 @ 6' 3"	0.837	Passed (L/842)	--	D+Lr

- Deflection criteria: roof live or snow alone L/240 (IRC Table R301.7); dead plus live L/180 (this member's own limit).
- Bending adjustment factors: CD = 1.25, CL = 1.00 (D+Lr).
- Beam stability: each moment checked against the bracing of its compression edge (CL = 1.00 where braced).
- Member self weight of 11.5 plf is included.
- Calculations per NDS 2018, ASD, every load combination with its own load duration factor.

	Bearing Length		Loads to Supports (lbs)			
Supports	Provided	Required	Dead	Roof Live	Total	Load goes to
1 @ 0	1 1/2"	5/8"	773	754	**1,527**	SpotFtg Hdr 9-1 (on (1) trimmer, (3) king studs)
2 @ 12' 6"	1 1/2"	5/8"	773	754	**1,527**	SpotFtg Hdr #9-2 (on (1) trimmer, (3) king studs)

Total = the governing ASD combination at that support ("up": the governing uplift, where another combination lifts it); the category columns are service loads.

Lateral Bracing	Bracing Intervals	Comments
Top Edge (Lu)	continuous	braced by the sheathing
Bottom Edge (Lu)	12' 6" o/c	used for C_L only where the bottom edge is in compression

Vertical Loads	Location	Trib. Width	Dead (0.90)	Roof Live (1.25)	Comments
0 - Self Weight (PLF)	0 to 12' 6"	N/A	11.5	--	
1 - Uniform (PLF)	0 to 12' 6"	N/A	109.8	118.2	Linked from: Rafters #8, Support 1

Shear, Moment and Deflection

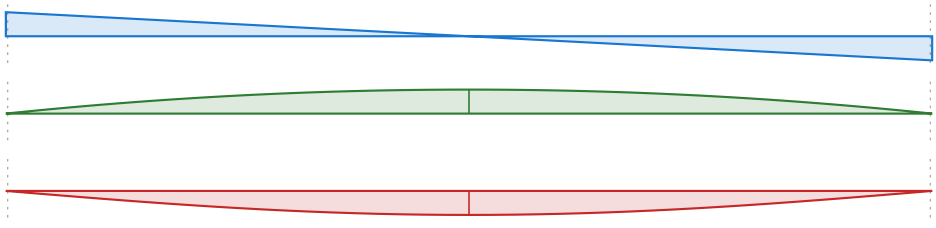

Shear (lbs)
D+Lr
max 1,497 @ left bearing

Moment (ft-lbs)
D+Lr
max 4,716 @ 6' 3"

Deflection (in)
D+Lr
0.179 in down @ 6' 3"
limit 0.837 in on the span

Header #11

(1) 4x10 SP No. 2 (3 1/2" x 9 1/4")

Level: Headers - 1st Level | Member type: Header (roof loads) | Length: 6' 9" | 2018 IRC | 2018 NDS | ASD

PASSED

Controls: Moment 44% used
Section adequacy 55.7% (capacity to spare)

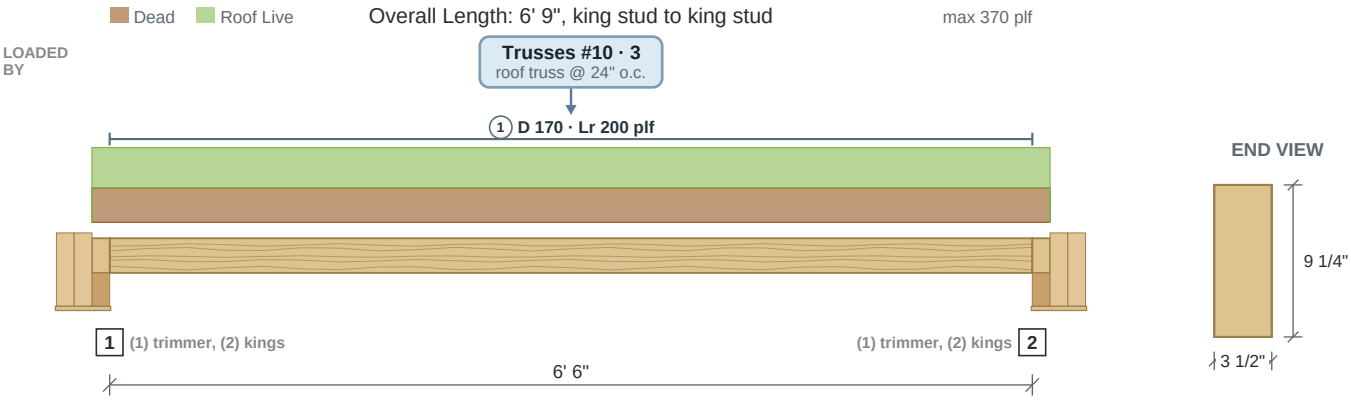

Drawing is conceptual. Locations are measured from the left end of the member; all dimensions are horizontal.

Design Results	Actual @ Location	Allowed	Result	LDF	Load Combination
Member Reaction (lbs)	1,274 @ 0	2,966 (1 1/2")	Passed (43% used)	--	
Shear (lbs)	936 @ 9 1/4"	4,722	Passed (20% used)	1.25	D+Lr
Moment (Ft-lbs)	2,026 @ 3' 3"	4,575	Passed (44% used)	1.25	D+Lr
Live Load Defl. (in)	0.026 @ 3' 3"	0.328	Passed (L/3,062)	--	Lr
Total Load Defl. (in)	0.048 @ 3' 3"	0.437	Passed (L/1,623)	--	D+Lr

- Deflection criteria: roof live or snow alone L/240 (IRC Table R301.7); dead plus live L/180 (this member's own limit).
- Bending adjustment factors: CD = 1.25, CL = 1.00 (D+Lr).
- Beam stability: each moment checked against the bracing of its compression edge (CL = 1.00 where braced).
- Member self weight of 7.4 plf is included.
- Calculations per NDS 2018, ASD, every load combination with its own load duration factor.

	Bearing Length		Loads to Supports (lbs)			
Supports	**Provided**	**Required**	**Dead**	**Roof Live**	**Total**	**Load goes to**
1 @ 0	1 1/2"	5/8"	599	675	**1,274**	SpotFtg Hdr #11-1 (on (1) trimmer, (2) king studs)
2 @ 6' 6"	1 1/2"	5/8"	599	675	**1,274**	SpotFtg Hdr #11-2 (on (1) trimmer, (2) king studs)

Total = the governing ASD combination at that support ("up": the governing uplift, where another combination lifts it); the category columns are service loads.

Lateral Bracing	Bracing Intervals	Comments
Top Edge (Lu)	continuous	braced by the sheathing
Bottom Edge (Lu)	6' 6" o/c	used for C_L only where the bottom edge is in compression

Vertical Loads	Location	Trib. Width	Dead (0.90)	Roof Live (1.25)	Comments
0 - Self Weight (PLF)	0 to 6' 6"	N/A	7.4	--	
1 - Uniform (PLF)	0 to 6' 6"	N/A	170	200	Linked from: Trusses #10, Support 3

Shear, Moment and Deflection

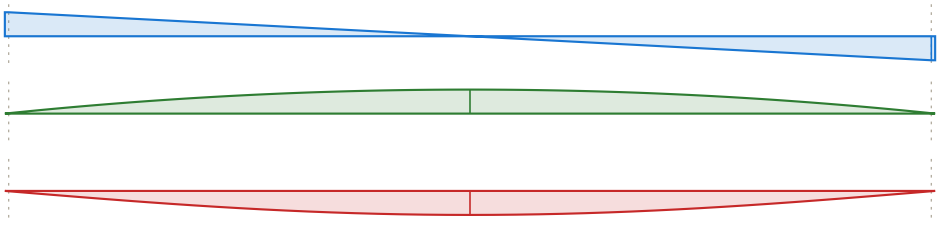

Shear (lbs)
D+Lr
max -1,226 @ 6' 6"

Moment (ft-lbs)
D+Lr
max 2,026 @ 3' 3"

Deflection (in)
D+Lr
0.048 in down @ 3' 3"
limit 0.437 in on the span

Header #12

(1) 4x8 SP No. 2 (3 1/2" x 7 1/4")

Level: Headers - 1st Level | Member type: Header (roof loads) | Length: 4' 1 1/2" | 2018 IRC | 2018 NDS | ASD

PASSED

Controls: Bearing 21% used

Section adequacy 78.7% (capacity to spare)

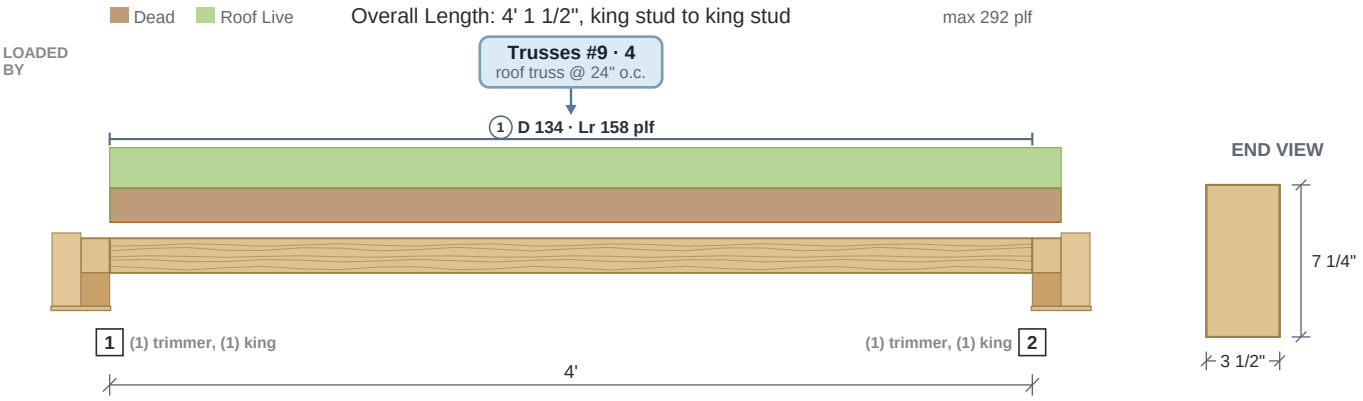

Drawing is conceptual. Locations are measured from the left end of the member; all dimensions are horizontal.

Design Results	Actual @ Location	Allowed	Result	LDF	Load Combination
Member Reaction (lbs)	632 @ 4'	2,966 (1 1/2")	Passed (21% used)	--	
Shear (lbs)	415 @ 7 1/4"	3,701	Passed (11% used)	1.25	D+Lr
Moment (Ft-lbs)	603 @ 2'	3,250	Passed (19% used)	1.25	D+Lr
Live Load Defl. (in)	0.006 @ 2'	0.201	Passed (L/8,067)	--	Lr
Total Load Defl. (in)	0.011 @ 2'	0.268	Passed (L/4,276)	--	D+Lr

- Deflection criteria: roof live or snow alone L/240 (IRC Table R301.7); dead plus live L/180 (this member's own limit).
- Bending adjustment factors: CD = 1.25, CL = 1.00 (D+Lr).
- Beam stability: each moment checked against the bracing of its compression edge (CL = 1.00 where braced).
- Member self weight of 5.8 plf is included.
- Calculations per NDS 2018, ASD, every load combination with its own load duration factor.

	Bearing Length		Loads to Supports (lbs)			
Supports	Provided	Required	Dead	Roof Live	Total	Load goes to
1 @ 0	1 1/2"	5/16"	280	315	**595**	Header #26 (on (1) trimmer, (1) king stud)
2 @ 4'	1 1/2"	5/16"	297	335	**632**	SpotFtg Hdr #12-2 (on (1) trimmer, (1) king stud)

Total = the governing ASD combination at that support ("up": the governing uplift, where another combination lifts it); the category columns are service loads.

Lateral Bracing	Bracing Intervals	Comments
Top Edge (Lu)	continuous	braced by the sheathing
Bottom Edge (Lu)	4' o/c	used for C_L only where the bottom edge is in compression

Vertical Loads	Location	Trib. Width	Dead (0.90)	Roof Live (1.25)	Comments
0 - Self Weight (PLF)	0 to 4'	N/A	5.8	--	
1 - Uniform (PLF)	0 to 4'	N/A	134	157.7	Linked from: Trusses #9, Support 4

Shear, Moment and Deflection

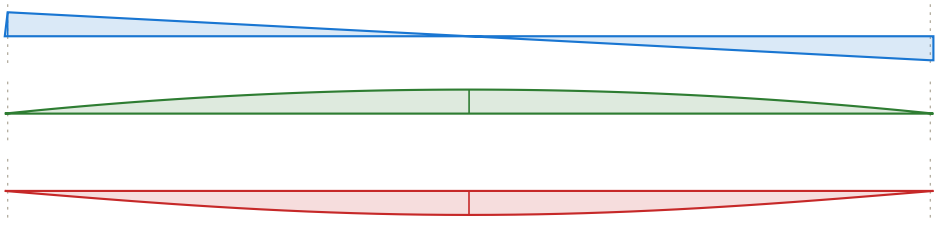

Shear (lbs)
D+Lr
max 595 @ 0

Moment (ft-lbs)
D+Lr
max 603 @ 2'

Deflection (in)
D+Lr
0.011 in down @ 2'
limit 0.268 in on the span

Header #13

(1) 4x10 SP No. 2 (3 1/2" x 9 1/4")

Level: Headers - 1st Level | Member type: Header (roof loads) | Length: 10' 3" | 2018 IRC | 2018 NDS | ASD

PASSED

Controls: Moment 77% used
Section adequacy 23.1% (capacity to spare)

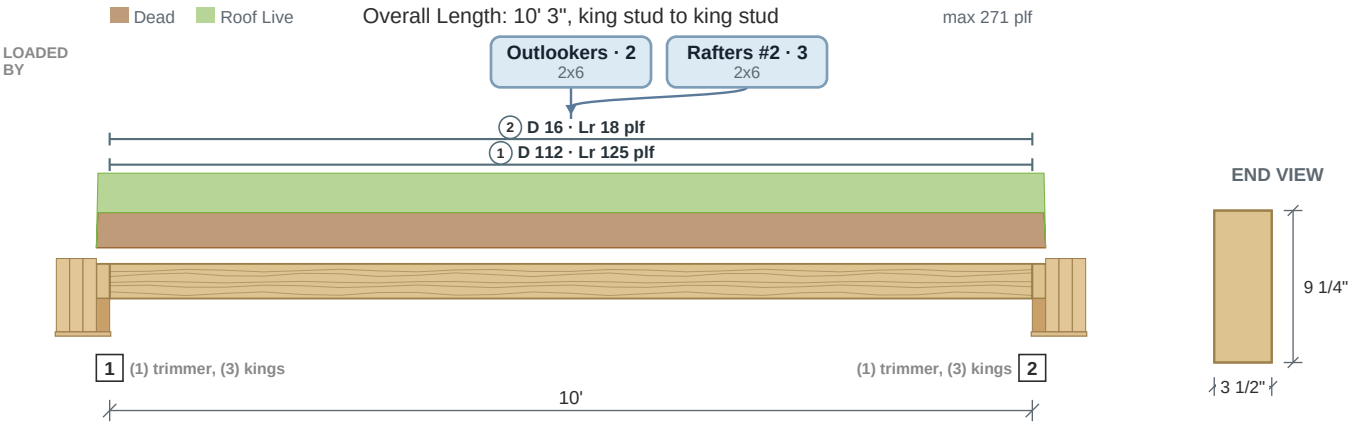

Drawing is conceptual. Locations are measured from the left end of the member; all dimensions are horizontal.

Design Results	Actual @ Location	Allowed	Result	LDF	Load Combination
Member Reaction (lbs)	1,426 @ 0	2,966 (1 1/2")	Passed (48% used)	--	
Shear (lbs)	1,176 @ 9 1/4"	4,722	Passed (25% used)	1.25	D+Lr
Moment (Ft-lbs)	3,519 @ 5'	4,575	Passed (77% used)	1.25	D+Lr
Live Load Defl. (in)	0.102 @ 5'	0.503	Passed (L/1,186)	--	Lr
Total Load Defl. (in)	0.198 @ 5'	0.671	Passed (L/609)	--	D+Lr

- Deflection criteria: roof live or snow alone L/240 (IRC Table R301.7); dead plus live L/180 (this member's own limit).
- Bending adjustment factors: CD = 1.25, CL = 1.00 (D+Lr).
- Beam stability: each moment checked against the bracing of its compression edge (CL = 1.00 where braced).
- Member self weight of 7.4 plf is included.
- Calculations per NDS 2018, ASD, every load combination with its own load duration factor.

	Bearing Length		Loads to Supports (lbs)			
Supports	**Provided**	**Required**	**Dead**	**Roof Live**	**Total**	**Load goes to**
1 @ 0	1 1/2"	3/4"	694	732	**1,426**	SpotFtg Hdr #13-1 (on (1) trimmer, (3) king studs)
2 @ 10'	1 1/2"	3/4"	694	732	**1,426**	SpotFtg Hdr #13-2 (on (1) trimmer, (3) king studs)

Total = the governing ASD combination at that support ("up": the governing uplift, where another combination lifts it); the category columns are service loads.

Lateral Bracing	Bracing Intervals	Comments
Top Edge (Lu)	continuous	braced by the sheathing
Bottom Edge (Lu)	10' o/c	used for C_L only where the bottom edge is in compression

Vertical Loads	Location	Trib. Width	Dead (0.90)	Roof Live (1.25)	Comments
0 - Self Weight (PLF)	0 to 10'	N/A	7.4	--	
1 - Uniform (PLF)	0 to 10'	N/A	112.1	125	Linked from: Outlookers, Support 2
2 - Uniform (PLF)	0 to 10'	N/A	15.9	17.7	Linked from: Rafters #2, Support 3

Shear, Moment and Deflection

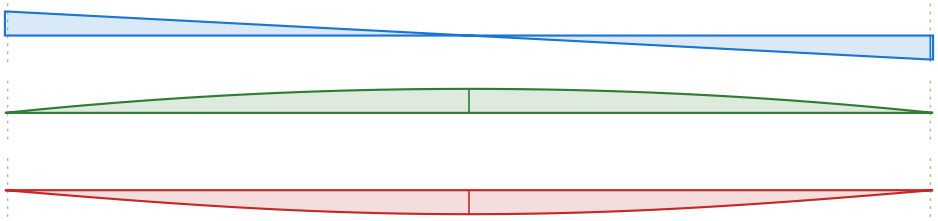

Shear (lbs)
D+Lr
max -1,391 @ 10'

Moment (ft-lbs)
D+Lr
max 3,519 @ 5'

Deflection (in)
D+Lr
0.198 in down @ 5'
limit 0.671 in on the span

Header #14

(2) 1 3/4" x 9 1/4" 2.0E Microlam LVL (Weyerhaeuser)

Level: Headers - 1st Level | Member type: Header (roof loads) | Length: 10' 3" | 2018 IRC | 2018 NDS | ASD

PASSED

Controls: Deflection 96% used
Section adequacy 4% (capacity to spare)

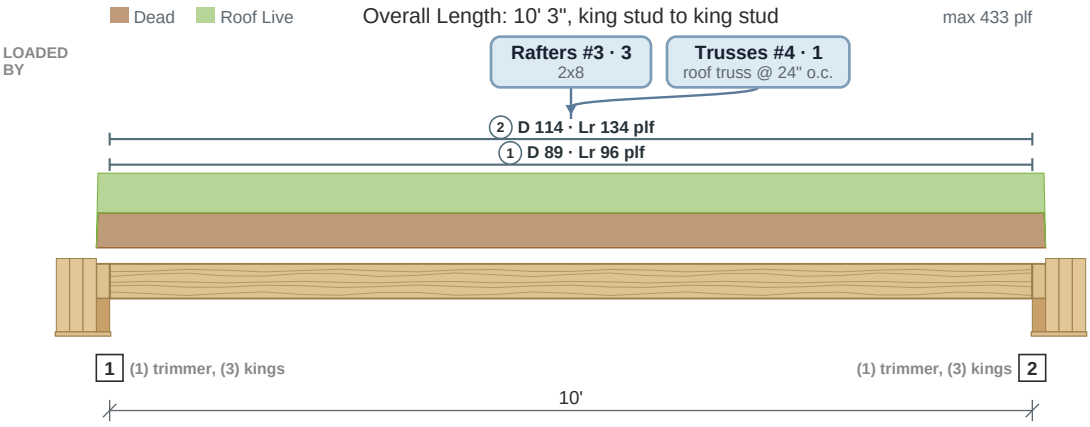

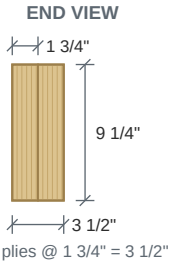

Drawing is conceptual. Locations are measured from the left end of the member; all dimensions are horizontal.

Design Results	Actual @ Location	Allowed	Result	LDF	Load Combination
Member Reaction (lbs)	2,266 @ 0	3,938 (1 1/2")	Passed (58% used)	--	
Shear (lbs)	1,870 @ 9' 2 3/4"	7,688	Passed (24% used)	1.25	D+Lr
Moment (Ft-lbs)	5,606 @ 5'	14,005	Passed (40% used)	1.25	D+Lr
Live Load Defl. (in)	0.126 @ 5'	0.504	Passed (L/961)	--	Lr
Total Load Defl. (in)	0.242 @ 5'	0.252	Passed (L/500)	--	D+Lr

- Deflection criteria: roof live or snow alone L/240 (IRC Table R301.7); dead plus live L/480 (this member's own limit).
- Bending adjustment factors: CD = 1.25, CV = 1.036, CL = 1.00 (D+Lr).
- Beam stability: each moment checked against the bracing of its compression edge (CL = 1.00 where braced).
- Member self weight of 9.4 plf is included.
- Calculations per NDS 2018 and Weyerhaeuser ICC-ES ESR-1387, ASD, every load combination with its own load duration factor.

	Bearing Length		Loads to Supports (lbs)			
Supports	Provided	Required	Dead	Roof Live	Total	Load goes to
1 @ 0	1 1/2"	7/8"	1,087	1,179	**2,266**	SpotFtg Hdr #14-1 (on (1) trimmer, (3) king studs)
2 @ 10'	1 1/2"	7/8"	1,087	1,179	**2,266**	SpotFtg Hdr #14-2 (on (1) trimmer, (3) king studs)

Total = the governing ASD combination at that support ("up": the governing uplift, where another combination lifts it); the category columns are service loads.

Lateral Bracing	Bracing Intervals	Comments
Top Edge (Lu)	continuous	braced by the sheathing
Bottom Edge (Lu)	10' o/c	used for C_L only where the bottom edge is in compression

Vertical Loads	Location	Trib. Width	Dead (0.90)	Roof Live (1.25)	Comments
0 - Self Weight (PLF)	0 to 10'	N/A	9.4	--	
1 - Uniform (PLF)	0 to 10'	N/A	89.2	96.4	Linked from: Rafters #3, Support 3
2 - Uniform (PLF)	0 to 10'	N/A	113.5	133.6	Linked from: Trusses #4, Support 1

Shear, Moment and Deflection

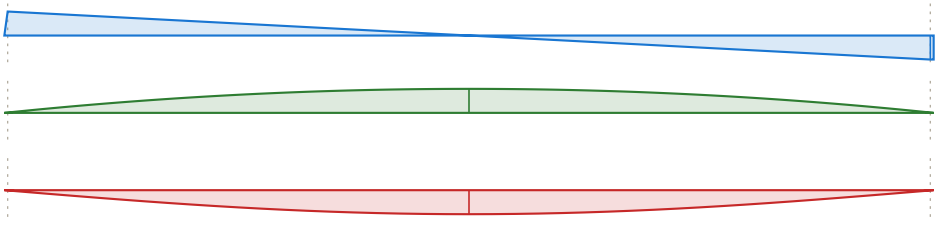

Shear (lbs)
D+Lr
max -2,211 @ 10'

Moment (ft-lbs)
D+Lr
max 5,606 @ 5'

Deflection (in)
D+Lr
0.242 in down @ 5' (shear incl.)
limit 0.252 in on the span

Header #15

(1) 4x8 SP No. 2 (3 1/2" x 7 1/4")

Level: Headers - 1st Level | Member type: Header (roof loads) | Length: 4' 3" | 2018 IRC | 2018 NDS | ASD

PASSED

Controls: Bearing 45% used

Section adequacy 54.5% (capacity to spare)

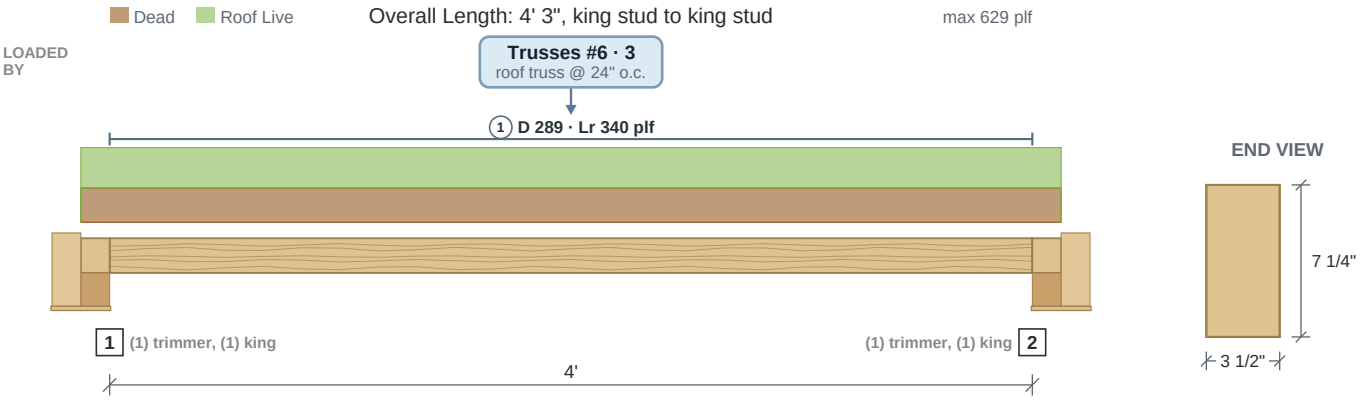

Drawing is conceptual. Locations are measured from the left end of the member; all dimensions are horizontal.

Design Results	Actual @ Location	Allowed	Result	LDF	Load Combination
Member Reaction (lbs)	1,349 @ 0	2,966 (1 1/2")	Passed (45% used)	--	
Shear (lbs)	886 @ 7 1/4"	3,701	Passed (24% used)	1.25	D+Lr
Moment (Ft-lbs)	1,306 @ 2'	3,250	Passed (40% used)	1.25	D+Lr
Live Load Defl. (in)	0.013 @ 2'	0.203	Passed (L/3,657)	--	Lr
Total Load Defl. (in)	0.025 @ 2'	0.27	Passed (L/1,959)	--	D+Lr

- Deflection criteria: roof live or snow alone L/240 (IRC Table R301.7); dead plus live L/180 (this member's own limit).
- Bending adjustment factors: CD = 1.25, CL = 1.00 (D+Lr).
- Beam stability: each moment checked against the bracing of its compression edge (CL = 1.00 where braced).
- Member self weight of 5.8 plf is included.
- Calculations per NDS 2018, ASD, every load combination with its own load duration factor.

	Bearing Length		Loads to Supports (lbs)			
Supports	Provided	Required	Dead	Roof Live	Total	Load goes to
1 @ 0	1 1/2"	11/16"	626	722	**1,349**	SpotFtg Hdr #15-1 (on (1) trimmer, (1) king stud)
2 @ 4'	1 1/2"	11/16"	626	722	**1,349**	SpotFtg Hdr #15-2 (on (1) trimmer, (1) king stud)

Total = the governing ASD combination at that support ("up": the governing uplift, where another combination lifts it); the category columns are service loads.

Lateral Bracing	Bracing Intervals	Comments
Top Edge (Lu)	continuous	braced by the sheathing
Bottom Edge (Lu)	4' o/c	used for C_L only where the bottom edge is in compression

Vertical Loads	Location	Trib. Width	Dead (0.90)	Roof Live (1.25)	Comments
0 - Self Weight (PLF)	0 to 4'	N/A	5.8	--	
1 - Uniform (PLF)	0 to 4'	N/A	289	340	Linked from: Trusses #6, Support 3

Shear, Moment and Deflection

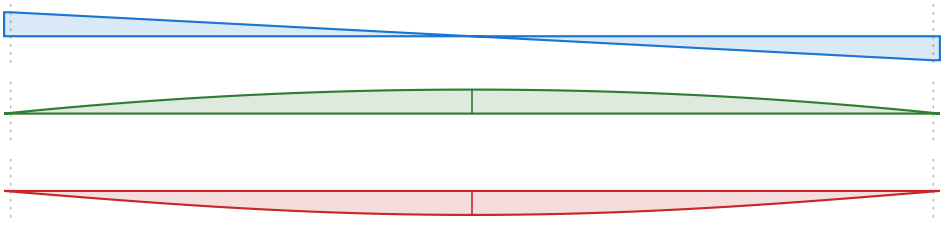

Shear (lbs)
D+Lr
max 1,270 @ left bearing

Moment (ft-lbs)
D+Lr
max 1,306 @ 2'

Deflection (in)
D+Lr
0.025 in down @ 2'
limit 0.27 in on the span

Header #16

(2) 1 3/4" x 11 7/8" 2.0E Microlam LVL (Weyerhaeuser)

Level: Headers - 1st Level | Member type: Header (roof loads) | Length: 10' 3" | 2018 IRC | 2018 NDS | ASD

PASSED

Controls: Bearing 95% used
Section adequacy 5.3% (capacity to spare)

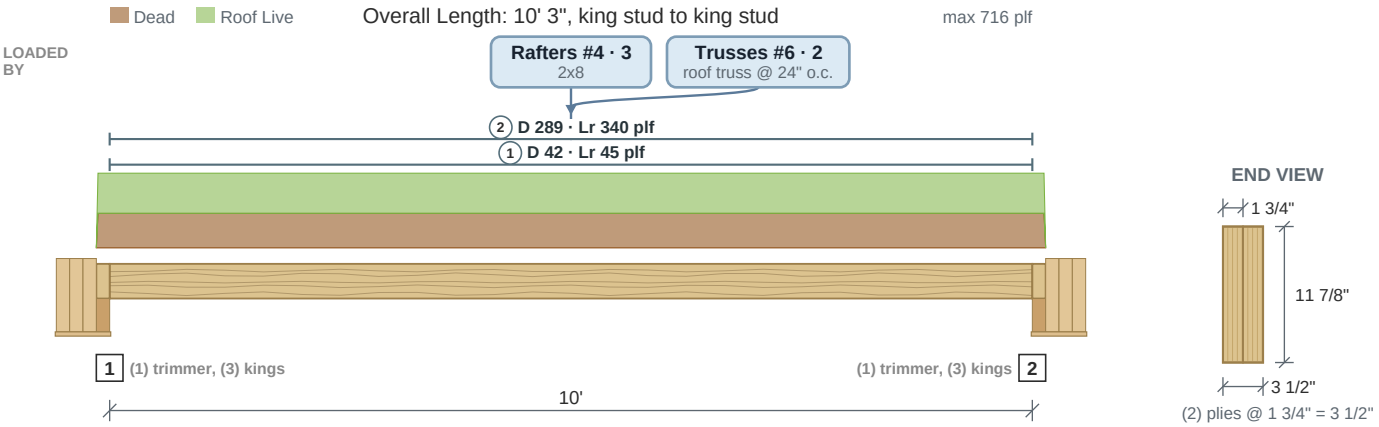

Drawing is conceptual. Locations are measured from the left end of the member; all dimensions are horizontal.

Design Results	Actual @ Location	Allowed	Result	LDF	Load Combination
Member Reaction (lbs)	3,730 @ 0	3,938 (1 1/2")	Passed (95% used)	--	
Shear (lbs)	2,918 @ 9' 1/8"	9,870	Passed (30% used)	1.25	D+Lr
Moment (Ft-lbs)	9,312 @ 5'	22,310	Passed (42% used)	1.25	D+Lr
Live Load Defl. (in)	0.107 @ 5'	0.506	Passed (L/1,139)	--	Lr
Total Load Defl. (in)	0.201 @ 5'	0.675	Passed (L/603)	--	D+Lr

- Deflection criteria: roof live or snow alone L/240 (IRC Table R301.7); dead plus live L/180 (this member's own limit).
- Bending adjustment factors: CD = 1.25, CV = 1.001, CL = 1.00 (D+Lr).
- Beam stability: each moment checked against the bracing of its compression edge (CL = 1.00 where braced).
- Member self weight of 12.1 plf is included.
- Calculations per NDS 2018 and Weyerhaeuser ICC-ES ESR-1387, ASD, every load combination with its own load duration factor.

	Bearing Length		Loads to Supports (lbs)			
Supports	**Provided**	**Required**	**Dead**	**Roof Live**	**Total**	**Load goes to**
1 @ 0	1 1/2"	1 7/16"	1,756	1,973	**3,730**	SpotFtg Hdr #16-1 (on (1) trimmer, (3) king studs)
2 @ 10'	1 1/2"	1 7/16"	1,756	1,973	**3,730**	SpotFtg Hdr #16-2 (on (1) trimmer, (3) king studs)

Total = the governing ASD combination at that support ("up": the governing uplift, where another combination lifts it); the category columns are service loads.

Lateral Bracing	Bracing Intervals	Comments
Top Edge (Lu)	continuous	braced by the sheathing
Bottom Edge (Lu)	10' o/c	used for C_L only where the bottom edge is in compression

Vertical Loads	Location	Trib. Width	Dead (0.90)	Roof Live (1.25)	Comments
0 - Self Weight (PLF)	0 to 10'	N/A	12.1	--	
1 - Uniform (PLF)	0 to 10'	N/A	41.6	45	Linked from: Rafters #4, Support 3
2 - Uniform (PLF)	0 to 10'	N/A	289	340	Linked from: Trusses #6, Support 2

Shear, Moment and Deflection

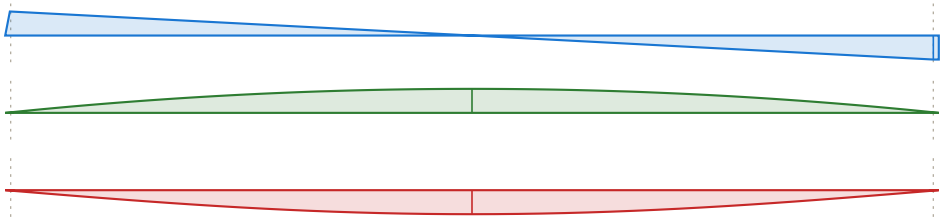

Shear (lbs)
D+Lr
max -3,639 @ 10'

Moment (ft-lbs)
D+Lr
max 9,312 @ 5'

Deflection (in)
D+Lr
0.201 in down @ 5' (shear incl.)
limit 0.675 in on the span

Header #17

(2) 2x12 SP No. 2 (1 1/2" x 11 1/4")

Level: Headers - 1st Level | Member type: Header (roof loads) | Length: 10' 3" | 2018 IRC | 2018 NDS | ASD

PASSED

Controls: Moment 63% used

Section adequacy 37.3% (capacity to spare)

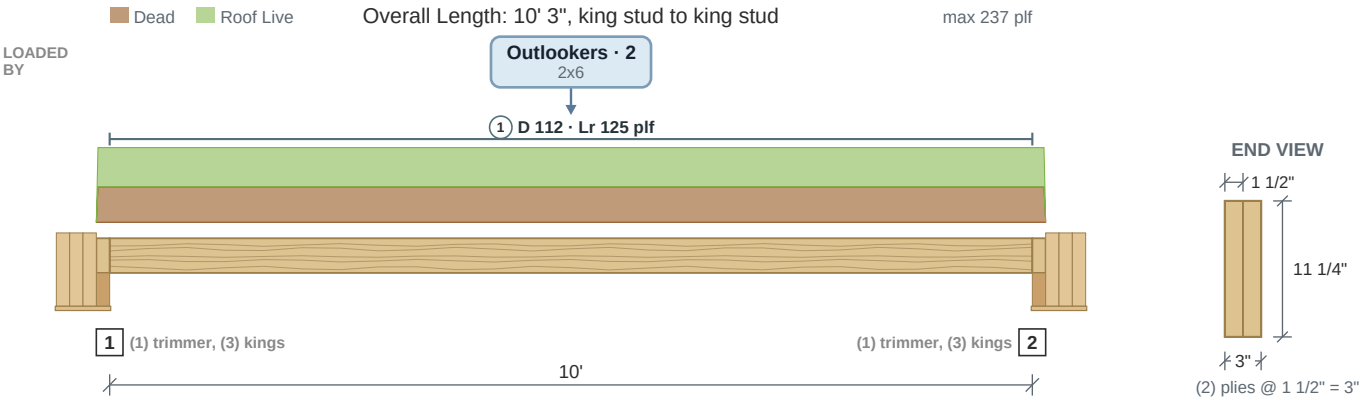

Drawing is conceptual. Locations are measured from the left end of the member; all dimensions are horizontal.

Design Results	Actual @ Location	Allowed	Result	LDF	Load Combination
Member Reaction (lbs)	1,255 @ 0	2,542 (1 1/2")	Passed (49% used)	--	
Shear (lbs)	994 @ 11 1/4"	4,923	Passed (20% used)	1.25	D+Lr
Moment (Ft-lbs)	3,098 @ 5'	4,944	Passed (63% used)	1.25	D+Lr
Live Load Defl. (in)	0.058 @ 5'	0.503	Passed (L/2,087)	--	Lr
Total Load Defl. (in)	0.113 @ 5'	0.671	Passed (L/1,066)	--	D+Lr

- Deflection criteria: roof live or snow alone L/240 (IRC Table R301.7); dead plus live L/180 (this member's own limit).
- Bending adjustment factors: CD = 1.25, CL = 1.00 (D+Lr).
- Beam stability: each moment checked against the bracing of its compression edge (CL = 1.00 where braced).
- Member self weight of 7.7 plf is included.
- Calculations per NDS 2018, ASD, every load combination with its own load duration factor.

	Bearing Length		Loads to Supports (lbs)			
Supports	Provided	Required	Dead	Roof Live	Total	Load goes to
1 @ 0	1 1/2"	3/4"	614	641	**1,255**	SpotFtg Hdr #17-1 (on (1) trimmer, (3) king studs)
2 @ 10'	1 1/2"	3/4"	614	641	**1,255**	SpotFtg Hdr #17-2 (on (1) trimmer, (3) king studs)

Total = the governing ASD combination at that support ("up": the governing uplift, where another combination lifts it); the category columns are service loads.

Lateral Bracing	Bracing Intervals	Comments
Top Edge (Lu)	continuous	braced by the sheathing
Bottom Edge (Lu)	10' o/c	used for C_L only where the bottom edge is in compression

Vertical Loads	Location	Trib. Width	Dead (0.90)	Roof Live (1.25)	Comments
0 - Self Weight (PLF)	0 to 10'	N/A	7.7	--	
1 - Uniform (PLF)	0 to 10'	N/A	112.1	125	Linked from: Outlookers, Support 2

Shear, Moment and Deflection

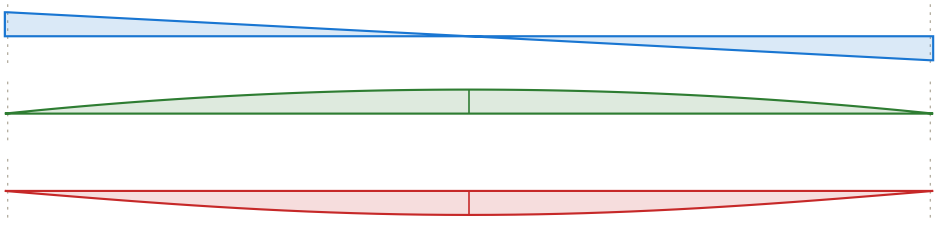

Shear (lbs)
D+Lr
max 1,224 @ left bearing

Moment (ft-lbs)
D+Lr
max 3,098 @ 5'

Deflection (in)
D+Lr
0.113 in down @ 5'
limit 0.671 in on the span

Header #18

PASSED

(2) 1 3/4" x 11 7/8" 2.0E Microlam LVL (Weyerhaeuser)

Level: Headers - 1st Level | Member type: Header (roof loads) | Length: 10' 6" | 2018 IRC | 2018 NDS | ASD

Controls: Bearing 97% used
Section adequacy 3% (capacity to spare)

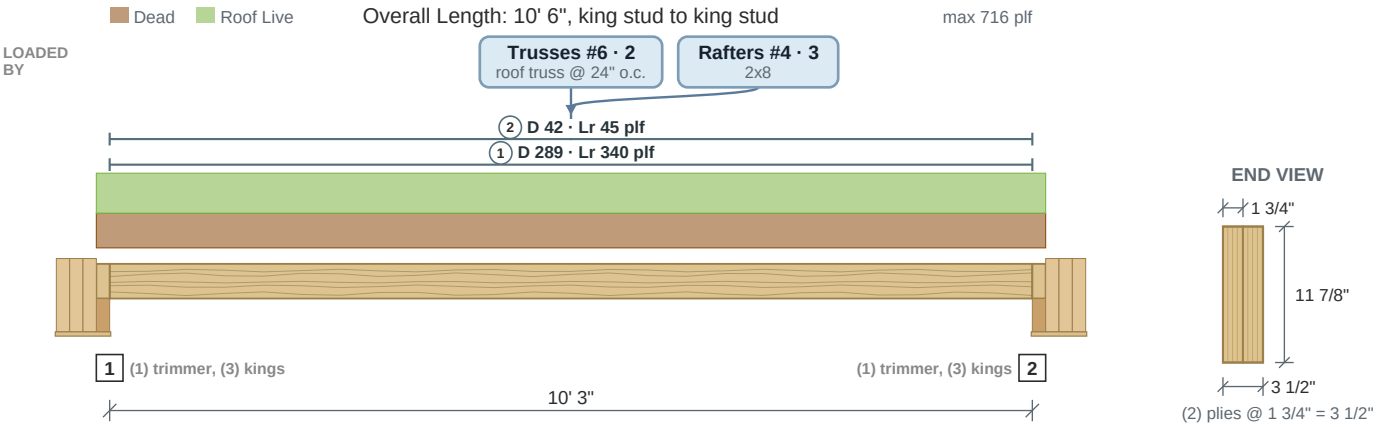

Drawing is conceptual. Locations are measured from the left end of the member; all dimensions are horizontal.

Design Results	Actual @ Location	Allowed	Result	LDF	Load Combination
Member Reaction (lbs)	3,820 @ 0	3,938 (1 1/2")	Passed (97% used)	--	
Shear (lbs)	3,009 @ 9' 3 1/8"	9,870	Passed (30% used)	1.25	D+Lr
Moment (Ft-lbs)	9,783 @ 5' 1 1/2"	22,310	Passed (44% used)	1.25	D+Lr
Live Load Defl. (in)	0.117 @ 5' 1 1/2"	0.519	Passed (L/1,064)	--	Lr
Total Load Defl. (in)	0.221 @ 5' 1 1/2"	0.253	Passed (L/563)	--	D+Lr

- Deflection criteria: roof live or snow alone L/240 (IRC Table R301.7); dead plus live L/492 (this member's own limit). L/492 is the 1/4 in maximum on the governing span.
- Bending adjustment factors: CD = 1.25, CV = 1.001, CL = 1.00 (D+Lr).
- Beam stability: each moment checked against the bracing of its compression edge (CL = 1.00 where braced).
- Member self weight of 12.1 plf is included.
- Calculations per NDS 2018 and Weyerhaeuser ICC-ES ESR-1387, ASD, every load combination with its own load duration factor.

	Bearing Length		Loads to Supports (lbs)			
Supports	**Provided**	**Required**	**Dead**	**Roof Live**	**Total**	**Load goes to**
1 @ 0	1 1/2"	1 7/16"	1,799	2,021	**3,820**	SpotFtg Hdr #16-2 (on (1) trimmer, (3) king studs)
2 @ 10' 3"	1 1/2"	1 7/16"	1,799	2,021	**3,820**	SpotFtg Hdr #18-2 (on (1) trimmer, (3) king studs)

Total = the governing ASD combination at that support ("up": the governing uplift, where another combination lifts it); the category columns are service loads.

Lateral Bracing	Bracing Intervals	Comments
Top Edge (Lu)	continuous	braced by the sheathing
Bottom Edge (Lu)	10' 3" o/c	used for C_L only where the bottom edge is in compression

Vertical Loads	Location	Trib. Width	Dead (0.90)	Roof Live (1.25)	Comments
0 - Self Weight (PLF)	0 to 10' 3"	N/A	12.1	--	
1 - Uniform (PLF)	0 to 10' 3"	N/A	289	340	Linked from: Trusses #6, Support 2
2 - Uniform (PLF)	0 to 10' 3"	N/A	41.6	45	Linked from: Rafters #4, Support 3

Shear, Moment and Deflection

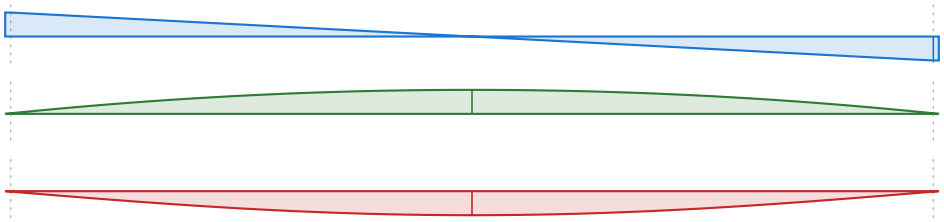

Shear (lbs)
D+Lr
max -3,729 @ 10' 3"

Moment (ft-lbs)
D+Lr
max 9,783 @ 5' 1 1/2"

Deflection (in)
D+Lr
0.221 in down @ 5' 1 1/2" (shear incl.)
limit 0.253 in on the span

Header #19

(1) 4x8 SP No. 2 (3 1/2" x 7 1/4")

PASSED

Controls: Moment 71% used

Level: Headers - Basement | Member type: Header (floor and roof loads) | Length: 3' 6" | 2018 IRC | 2018 NDS | ASD

Section adequacy 28.5% (capacity to spare)

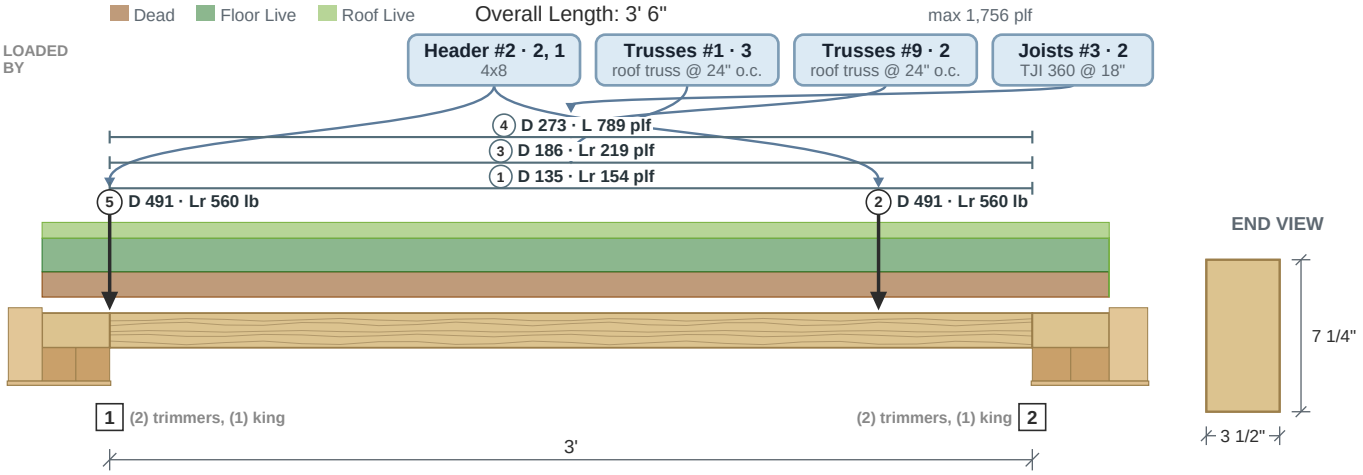

Drawing is conceptual. Locations are measured from the left end of the member; all dimensions are horizontal.

Design Results	Actual @ Location	Allowed	Result	LDF	Load Combination
Member Reaction (lbs)	3,624 @ 0	5,932 (3")	Passed (61% used)	--	
Shear (lbs)	1,566 @ 2' 4 3/4"	2,960	Passed (53% used)	1.00	D+L
Moment (Ft-lbs)	1,859 @ 1' 6 11/16"	2,600	Passed (71% used)	1.00	D+L
Live Load Defl. (in)	0.011 @ 1' 5 9/16"	0.105	Passed (L/3,387)	--	L
Total Load Defl. (in)	0.025 @ 1' 5 13/16"	0.21	Passed (L/1,529)	--	D+0.75L+0.75Lr

- Deflection criteria: floor live alone L/360 (IRC Table R301.7); roof live or snow alone L/240 (IRC Table R301.7); dead plus live L/180 (this member's own limit).
- Bending adjustment factors: CD = 1.00, CL = 1.00 (D+L).
- Beam stability: each moment checked against the bracing of its compression edge (CL = 1.00 where braced).
- Member self weight of 5.8 plf is included.
- Point loads within 2 in of a bearing go straight into that support: they are in its reaction and bearing check, not in shear or moment.
- Calculations per NDS 2018, ASD, every load combination with its own load duration factor.

	Bearing Length		Loads to Supports (lbs)				
Supports	**Provided**	**Required**	**Dead**	**Floor Live**	**Roof Live**	**Total**	**Load goes to**
1 @ 0	3"	1 13/16"	1,616	1,378	1,300	**3,624**	SpotFtg Hdr #19-1 (on (2) trimmers, (1) king stud)
2 @ 3'	3"	1 11/16"	1,466	1,383	1,126	**3,348**	SpotFtg Hdr #19-2 (on (2) trimmers, (1) king stud)

Total = the governing ASD combination at that support ("up": the governing uplift, where another combination lifts it); the category columns are service loads.

Lateral Bracing	Bracing Intervals	Comments
Top Edge (Lu)	continuous	braced by the sheathing
Bottom Edge (Lu)	3' o/c	used for C_L only where the bottom edge is in compression

Vertical Loads	Location	Trib. Width	Dead (0.90)	Floor Live (1.00)	Roof Live (1.25)	Comments
0 - Self Weight (PLF)	0 to 3'	N/A	5.8	--	--	
1 - Uniform (PLF)	0 to 3'	N/A	135.3	--	154.4	Linked from: Trusses #1, Support 3
2 - Point (lb)	2' 6"	N/A	491.5	--	559.8	Linked from: Header #2, Support 2
3 - Uniform (PLF)	0 to 3'	N/A	186	--	218.8	Linked from: Trusses #9, Support 2
4 - Uniform (PLF)	0 to 3'	N/A	273.1	788.8	--	Linked from: Joists #3, Support 2
5 - Point (lb)	0	N/A	490.6	--	559.8	Linked from: Header #2, Support 1

Header #19 (continued)

Header, floor and roof loads | (1) 4x8 SP No. 2 (3 1/2" x 7 1/4")

Shear, Moment and Deflection

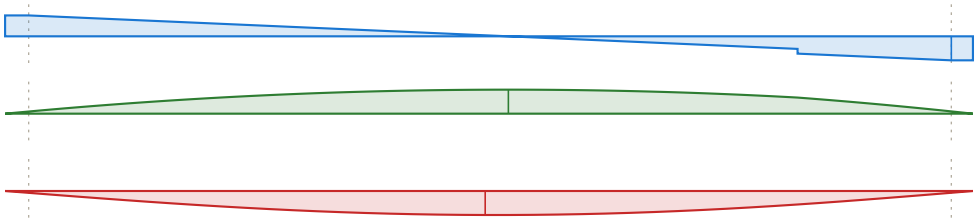

Shear (lbs)
D+L
max -2,490 @ 3'

Moment (ft-lbs)
D+L
max 1,859 @ 1' 6 11/16"

Deflection (in)
D+0.75L+0.75Lr
0.025 in down @ 1' 5 13/16"
limit 0.21 in on the span

Header #20

(1) 4x8 SP No. 2 (3 1/2" x 7 1/4")

Level: Headers - Basement | Member type: Header (floor and roof loads) | Length: 3' 3" | 2018 IRC | 2018 NDS | ASD

PASSED

Controls: Bearing 36% used

Section adequacy 64.5% (capacity to spare)

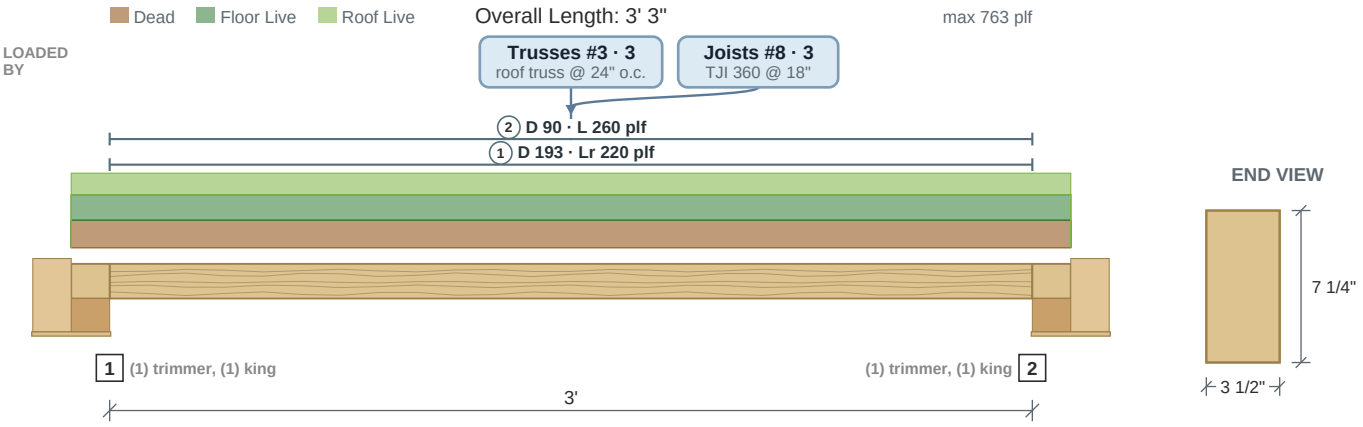

Drawing is conceptual. Locations are measured from the left end of the member; all dimensions are horizontal.

Design Results	Actual @ Location	Allowed	Result	LDF	Load Combination
Member Reaction (lbs)	1,054 @ 0	2,966 (1 1/2")	Passed (36% used)	--	
Shear (lbs)	491 @ 2' 4 3/4"	2,960	Passed (17% used)	1.00	D+L
Moment (Ft-lbs)	635 @ 1' 6"	2,600	Passed (24% used)	1.00	D+L
Live Load Defl. (in)	0.003 @ 1' 6"	0.101	Passed (L/9999+)	--	L
Total Load Defl. (in)	0.008 @ 1' 6"	0.203	Passed (L/4,537)	--	D+0.75L+0.75Lr

- Deflection criteria: floor live alone L/360 (IRC Table R301.7); roof live or snow alone L/240 (IRC Table R301.7); dead plus live L/180 (this member's own limit).
- Bending adjustment factors: CD = 1.00, CL = 1.00 (D+L).
- Beam stability: each moment checked against the bracing of its compression edge (CL = 1.00 where braced).
- Member self weight of 5.8 plf is included.
- Calculations per NDS 2018, ASD, every load combination with its own load duration factor.

	Bearing Length		Loads to Supports (lbs)				
Supports	**Provided**	**Required**	**Dead**	**Floor Live**	**Roof Live**	**Total**	**Load goes to**
1 @ 0	1 1/2"	1/2"	469	423	358	**1,054**	SpotFtg Hdr #20-1 (on (1) trimmer, (1) king stud)
2 @ 3'	1 1/2"	1/2"	469	423	358	**1,054**	SpotFtg Hdr #20-2 (on (1) trimmer, (1) king stud)

Total = the governing ASD combination at that support ("up": the governing uplift, where another combination lifts it); the category columns are service loads.

Lateral Bracing	Bracing Intervals	Comments
Top Edge (Lu)	continuous	braced by the sheathing
Bottom Edge (Lu)	3' o/c	used for C_L only where the bottom edge is in compression

Vertical Loads	Location	Trib. Width	Dead (0.90)	Floor Live (1.00)	Roof Live (1.25)	Comments
0 - Self Weight (PLF)	0 to 3'	N/A	5.8	--	--	
1 - Uniform (PLF)	0 to 3'	N/A	192.6	--	220	Linked from: Trusses #3, Support 3
2 - Uniform (PLF)	0 to 3'	N/A	90	260	--	Linked from: Joists #8, Support 3

Shear, Moment and Deflection

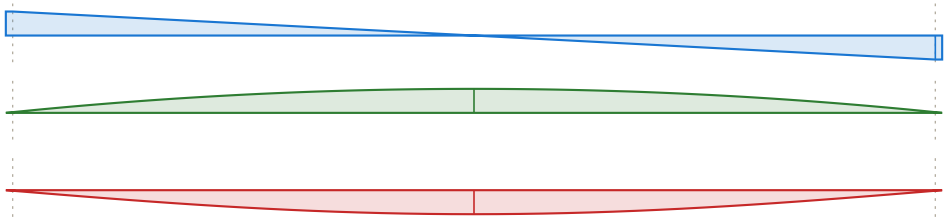

Shear (lbs)
D+L
max -823 @ 3'

Moment (ft-lbs)
D+L
max 635 @ 1' 6"

Deflection (in)
D+0.75L+0.75Lr
0.008 in down @ 1' 6"
limit 0.203 in on the span

Header #21

(3) 1 3/4" x 9 1/4" 2.0E Microlam LVL (Weyerhaeuser)

Level: Headers - Basement | Member type: Header (floor and roof loads) | Length: 6' 9" | 2018 IRC | 2018 NDS | ASD

PASSED

Controls: Bearing 80% used
Section adequacy 20.3% (capacity to spare)

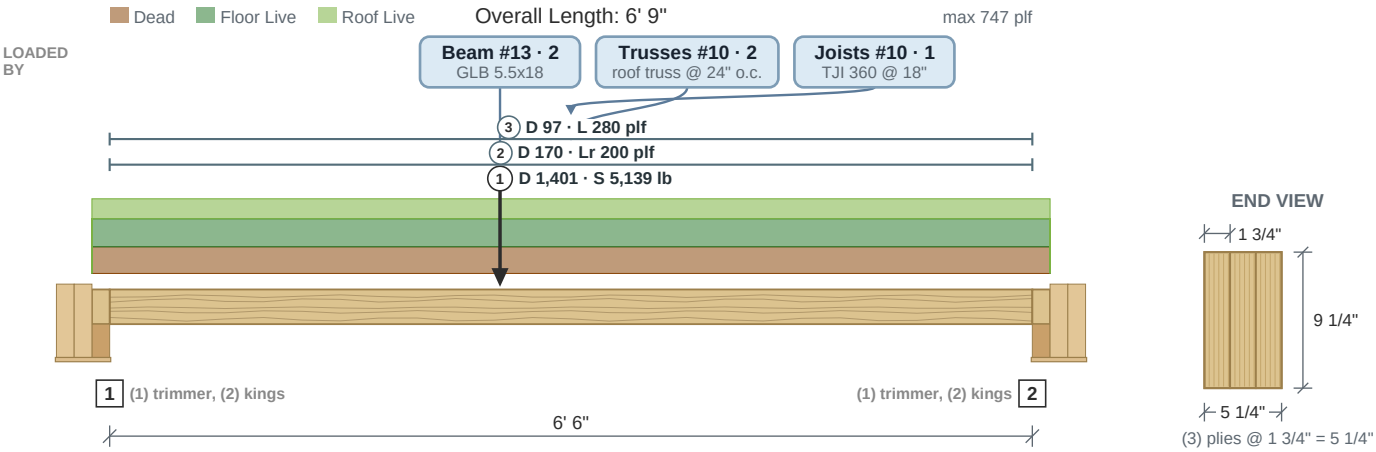

Drawing is conceptual. Locations are measured from the left end of the member; all dimensions are horizontal.

Design Results	Actual @ Location	Allowed	Result	LDF	Load Combination
Member Reaction (lbs)	4,709 @ 0	5,906 (1 1/2")	Passed (80% used)	--	
Shear (lbs)	4,458 @ 9 1/4"	10,613	Passed (42% used)	1.15	D+S
Moment (Ft-lbs)	12,025 @ 2' 9"	19,326	Passed (62% used)	1.15	D+S
Live Load Defl. (in)	0.094 @ 3' 13/16"	0.33	Passed (L/843)	--	S
Total Load Defl. (in)	0.14 @ 3' 15/16"	0.439	Passed (L/564)	--	D+S

- Deflection criteria: floor live alone L/360 (IRC Table R301.7); roof live or snow alone L/240 (IRC Table R301.7); dead plus live L/180 (this member's own limit).
- Bending adjustment factors: CD = 1.15, CV = 1.036, CL = 1.00 (D+S).
- Beam stability: each moment checked against the bracing of its compression edge (CL = 1.00 where braced).
- Member self weight of 14.2 plf is included.
- Calculations per NDS 2018 and Weyerhaeuser ICC-ES ESR-1387, ASD, every load combination with its own load duration factor.

	Bearing Length		Loads to Supports (lbs)					
Supports	**Provided**	**Required**	**Dead**	**Floor Live**	**Roof Live**	**Snow**	**Total**	**Load goes to**
1 @ 0	1 1/2"	1 3/16"	1,753	944	674	2,956	**4,709**	SpotFtg Hdr #21-1 (on (1) trimmer, (2) king studs)
2 @ 6' 6"	1 1/2"	1"	1,545	946	676	2,183	**3,892**	SpotFtg Bm #1-2 (on (1) trimmer, (2) king studs)

Total = the governing ASD combination at that support ("up": the governing uplift, where another combination lifts it); the category columns are service loads.

Lateral Bracing	Bracing Intervals	Comments
Top Edge (Lu)	continuous	braced by the sheathing
Bottom Edge (Lu)	6' 6" o/c	used for C_L only where the bottom edge is in compression

Vertical Loads	Location	Trib. Width	Dead (0.90)	Floor Live (1.00)	Roof Live (1.25)	Snow (1.15)	Comments
0 - Self Weight (PLF)	0 to 6' 6"	N/A	14.2	--	--	--	
1 - Point (lb)	2' 9"	N/A	1,401	--	--	5,139	Linked from: Beam #13, Support 2
2 - Uniform (PLF)	0 to 6' 6"	N/A	170	--	200	--	Linked from: Trusses #10, Support 2
3 - Uniform (PLF)	0 to 6' 6"	N/A	96.9	280	--	--	Linked from: Joists #10, Support 1

Shear, Moment and Deflection

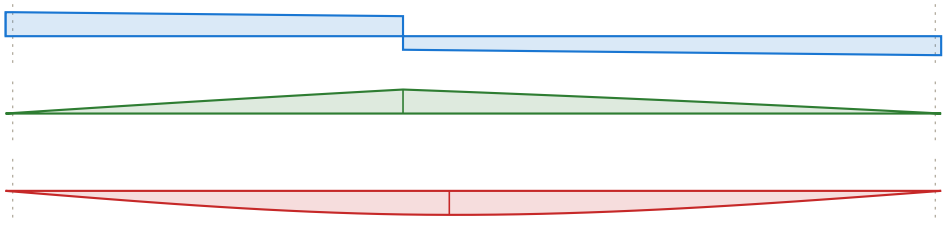

Shear (lbs)
D+S
max 4,674 @ left bearing

Moment (ft-lbs)
D+S
max 12,025 @ 2' 9"

Deflection (in)
D+S
0.14 in down @ 3' 15/16" (shear incl.)
limit 0.439 in on the span

Header #22

(3) 2x12 SP No. 2 (1 1/2" x 11 1/4")

Level: Headers - Basement | Member type: Header (roof loads) | Length: 12' 3" | 2018 IRC | 2018 NDS | ASD

PASSED

Controls: Moment 94% used
Section adequacy 5.7% (capacity to spare)

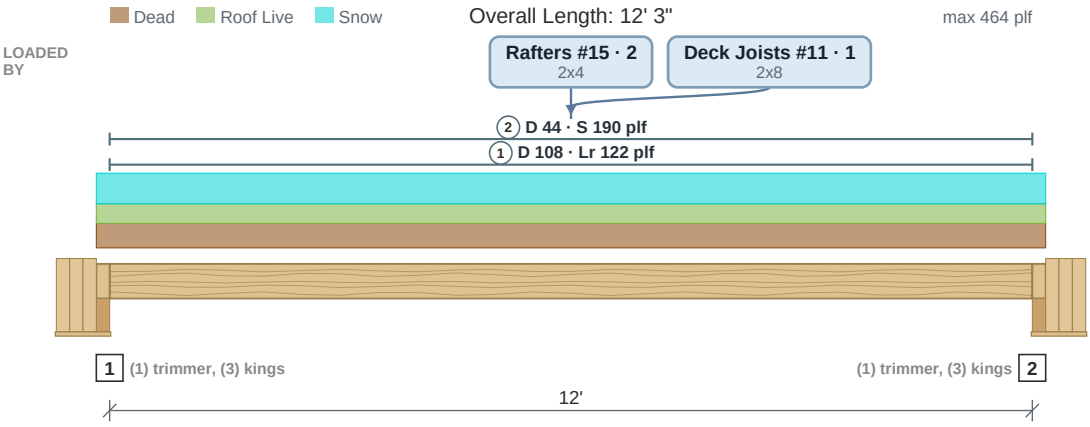

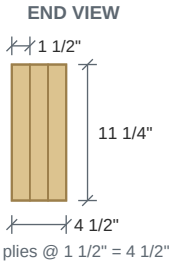

Drawing is conceptual. Locations are measured from the left end of the member; all dimensions are horizontal.

Design Results	Actual @ Location	Allowed	Result	LDF	Load Combination
Member Reaction (lbs)	2,163 @ 0	3,814 (1 1/2")	Passed (57% used)	--	
Shear (lbs)	1,788 @ 11' 3/4"	6,790	Passed (26% used)	1.15	D+S
Moment (Ft-lbs)	6,433 @ 6'	6,823	Passed (94% used)	1.15	D+S
Live Load Defl. (in)	0.121 @ 6'	0.604	Passed (L/1,193)	--	S
Total Load Defl. (in)	0.226 @ 6'	0.805	Passed (L/642)	--	D+S

- Deflection criteria: roof live or snow alone L/240 (IRC Table R301.7); dead plus live L/180 (this member's own limit).
- Bending adjustment factors: CD = 1.15, CL = 1.00 (D+S).
- Beam stability: each moment checked against the bracing of its compression edge (CL = 1.00 where braced).
- Member self weight of 11.5 plf is included.
- Calculations per NDS 2018, ASD, every load combination with its own load duration factor.

	Bearing Length		Loads to Supports (lbs)				
Supports	Provided	Required	Dead	Roof Live	Snow	Total	Load goes to
1 @ 0	1 1/2"	7/8"	1,000	750	1,164	**2,163**	SpotFtg Hdr 9-1 (on (1) trimmer, (3) king studs)
2 @ 12'	1 1/2"	7/8"	1,000	750	1,164	**2,163**	SpotFtg Hdr #9-2 (on (1) trimmer, (3) king studs)

Total = the governing ASD combination at that support ("up": the governing uplift, where another combination lifts it); the category columns are service loads.

Lateral Bracing	Bracing Intervals	Comments
Top Edge (Lu)	continuous	braced by the sheathing
Bottom Edge (Lu)	12' o/c	used for C_L only where the bottom edge is in compression

Vertical Loads	Location	Trib. Width	Dead (0.90)	Roof Live (1.25)	Snow (1.15)	Comments
0 - Self Weight (PLF)	0 to 12'	N/A	11.5	--	--	
1 - Uniform (PLF)	0 to 12'	N/A	107.8	122.5	--	Linked from: Rafters #15, Support 2
2 - Uniform (PLF)	0 to 12'	N/A	43.9	--	190	Linked from: Deck Joists #11, Support 1

Shear, Moment and Deflection

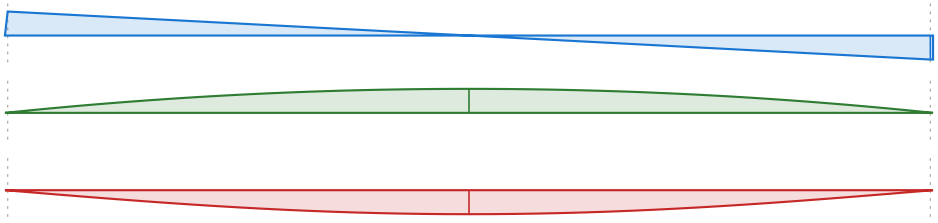

Shear (lbs)
D+S
max -2,119 @ 12'

Moment (ft-lbs)
D+S
max 6,433 @ 6'

Deflection (in)
D+S
0.226 in down @ 6'
limit 0.805 in on the span

Header #23

(3) 2x12 SP No. 2 (1 1/2" x 11 1/4")

Level: Headers - Basement | Member type: Header (roof loads) | Length: 10' 3" | 2018 IRC | 2018 NDS | ASD

PASSED

Controls: Moment 80% used

Section adequacy 19.5% (capacity to spare)

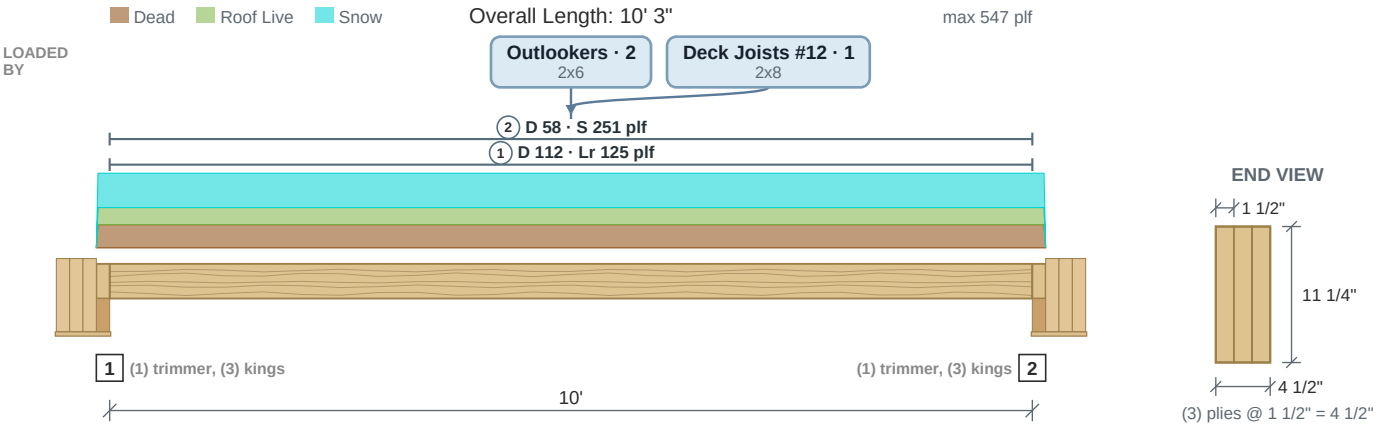

Drawing is conceptual. Locations are measured from the left end of the member; all dimensions are horizontal.

Design Results	Actual @ Location	Allowed	Result	LDF	Load Combination
Member Reaction (lbs)	2,220 @ 0	3,814 (1 1/2")	Passed (58% used)	--	
Shear (lbs)	1,759 @ 11 1/4"	6,790	Passed (26% used)	1.15	D+S
Moment (Ft-lbs)	5,492 @ 5'	6,823	Passed (80% used)	1.15	D+S
Live Load Defl. (in)	0.078 @ 5'	0.504	Passed (L/1,551)	--	S
Total Load Defl. (in)	0.134 @ 5'	0.672	Passed (L/901)	--	D+S

- Deflection criteria: roof live or snow alone L/240 (IRC Table R301.7); dead plus live L/180 (this member's own limit).
- Bending adjustment factors: CD = 1.15, CL = 1.00 (D+S).
- Beam stability: each moment checked against the bracing of its compression edge (CL = 1.00 where braced).
- Member self weight of 11.5 plf is included.
- Calculations per NDS 2018, ASD, every load combination with its own load duration factor.

	Bearing Length		Loads to Supports (lbs)				
Supports	Provided	Required	Dead	Roof Live	Snow	Total	Load goes to
1 @ 0	1 1/2"	7/8"	931	641	1,289	**2,219**	SpotFtg Bm #14-2 (on (1) trimmer, (3) king studs)
2 @ 10'	1 1/2"	7/8"	931	641	1,289	**2,219**	SpotFtg Hdr #23-2 (on (1) trimmer, (3) king studs)

Total = the governing ASD combination at that support ("up": the governing uplift, where another combination lifts it); the category columns are service loads.

Lateral Bracing	Bracing Intervals	Comments
Top Edge (Lu)	continuous	braced by the sheathing
Bottom Edge (Lu)	10' o/c	used for C_L only where the bottom edge is in compression

Vertical Loads	Location	Trib. Width	Dead (0.90)	Roof Live (1.25)	Snow (1.15)	Comments
0 - Self Weight (PLF)	0 to 10'	N/A	11.5	--	--	
1 - Uniform (PLF)	0 to 10'	N/A	112.1	125	--	Linked from: Outlookers, Support 2
2 - Uniform (PLF)	0 to 10'	N/A	57.9	--	251.5	Linked from: Deck Joists #12, Support 1

Shear, Moment and Deflection

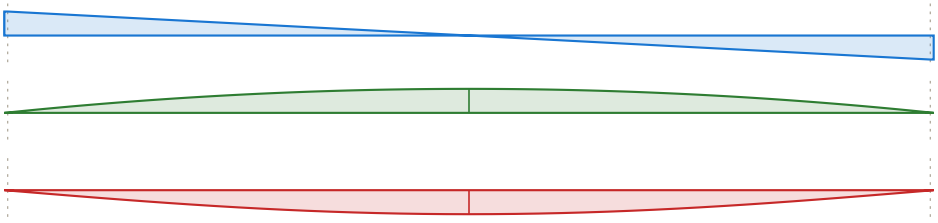

Shear (lbs)
D+S
max 2,165 @ left bearing

Moment (ft-lbs)
D+S
max 5,492 @ 5'

Deflection (in)
D+S
0.134 in down @ 5'
limit 0.672 in on the span

Header #24

(1) 4x10 SP No. 2 (3 1/2" x 9 1/4")

Level: Headers - Basement | Member type: Header (floor and roof loads) | Length: 7' | 2018 IRC | 2018 NDS | ASD

PASSED

Controls: Moment 89% used

Section adequacy 11.4% (capacity to spare)

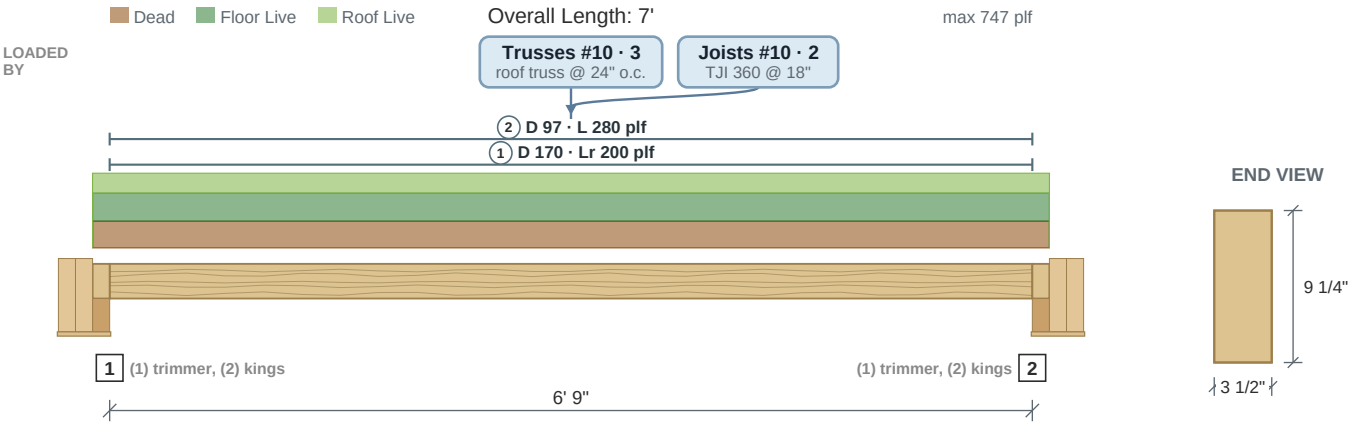

Drawing is conceptual. Locations are measured from the left end of the member; all dimensions are horizontal.

Design Results	Actual @ Location	Allowed	Result	LDF	Load Combination
Member Reaction (lbs)	2,220 @ 0	2,966 (1 1/2")	Passed (75% used)	--	
Shear (lbs)	1,444 @ 5' 11 3/4"	3,777	Passed (38% used)	1.00	D+L
Moment (Ft-lbs)	3,245 @ 3' 4 1/2"	3,660	Passed (89% used)	1.00	D+L
Live Load Defl. (in)	0.043 @ 3' 4 1/2"	0.228	Passed (L/1,921)	--	L
Total Load Defl. (in)	0.097 @ 3' 4 1/2"	0.456	Passed (L/848)	--	D+0.75L+0.75Lr

- Deflection criteria: floor live alone L/360 (IRC Table R301.7); roof live or snow alone L/240 (IRC Table R301.7); dead plus live L/180 (this member's own limit).
- Bending adjustment factors: CD = 1.00, CL = 1.00 (D+L).
- Beam stability: each moment checked against the bracing of its compression edge (CL = 1.00 where braced).
- Member self weight of 7.4 plf is included.
- Calculations per NDS 2018, ASD, every load combination with its own load duration factor.

	Bearing Length		Loads to Supports (lbs)				
Supports	Provided	Required	Dead	Floor Live	Roof Live	Total	Load goes to
1 @ 0	1 1/2"	1 1/8"	960	980	700	**2,220**	SpotFtg Hdr #24-1 (on (1) trimmer, (2) king studs)
2 @ 6' 9"	1 1/2"	1 1/8"	960	980	700	**2,220**	SpotFtg Hdr #24-2 (on (1) trimmer, (2) king studs)

Total = the governing ASD combination at that support ("up": the governing uplift, where another combination lifts it); the category columns are service loads.

Lateral Bracing	Bracing Intervals	Comments
Top Edge (Lu)	continuous	braced by the sheathing
Bottom Edge (Lu)	6' 9" o/c	used for C_L only where the bottom edge is in compression

Vertical Loads	Location	Trib. Width	Dead (0.90)	Floor Live (1.00)	Roof Live (1.25)	Comments
0 - Self Weight (PLF)	0 to 6' 9"	N/A	7.4	--	--	
1 - Uniform (PLF)	0 to 6' 9"	N/A	170	--	200	Linked from: Trusses #10, Support 3
2 - Uniform (PLF)	0 to 6' 9"	N/A	96.9	280	--	Linked from: Joists #10, Support 2

Shear, Moment and Deflection

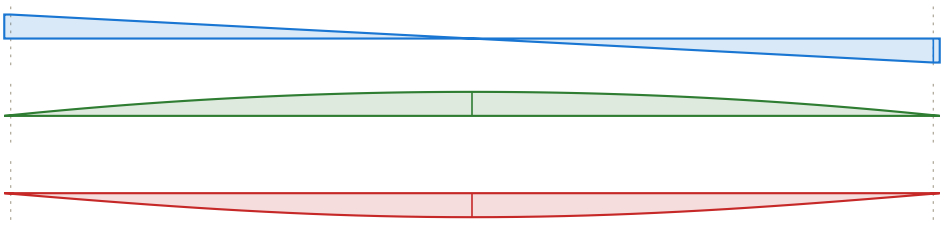

Shear (lbs)
D+L
max -1,871 @ 6' 9"

Moment (ft-lbs)
D+L
max 3,245 @ 3' 4 1/2"

Deflection (in)
D+0.75L+0.75Lr
0.097 in down @ 3' 4 1/2"
limit 0.456 in on the span

Header #25

(1) 4x8 SP No. 2 (3 1/2" x 7 1/4")

Level: Headers - Basement | Member type: Header (floor and roof loads) | Length: 3' 3" | 2018 IRC | 2018 NDS | ASD

PASSED

Controls: Bearing 80% used
Section adequacy 19.8% (capacity to spare)

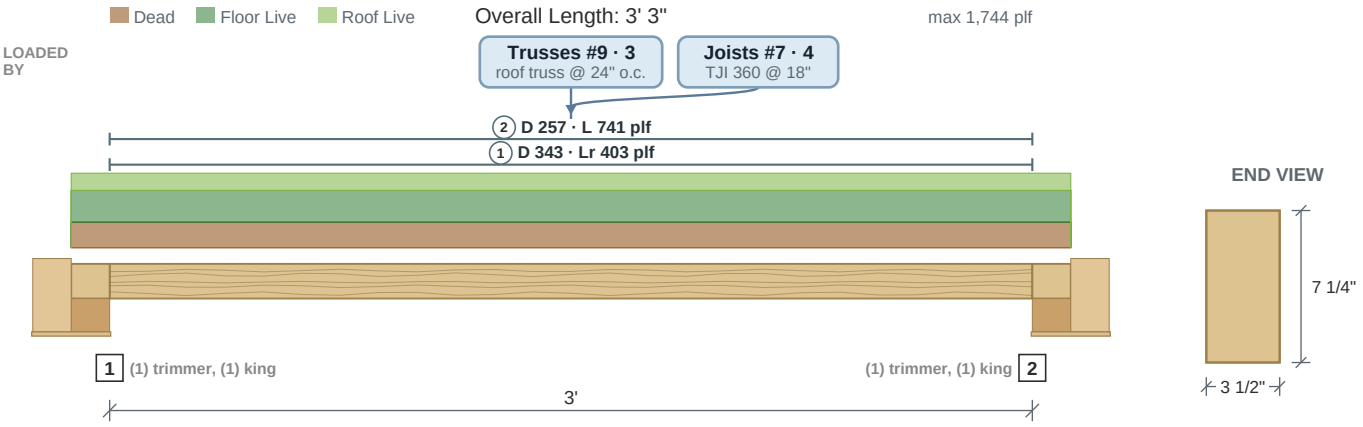

Drawing is conceptual. Locations are measured from the left end of the member; all dimensions are horizontal.

Design Results	Actual @ Location	Allowed	Result	LDF	Load Combination
Member Reaction (lbs)	2,379 @ 0	2,966 (1 1/2")	Passed (80% used)	--	
Shear (lbs)	1,206 @ 7 1/4"	2,960	Passed (41% used)	1.00	D+L
Moment (Ft-lbs)	1,616 @ 1' 6"	2,600	Passed (62% used)	1.00	D+L
Live Load Defl. (in)	0.01 @ 1' 6 7/16"	0.103	Passed (L/3,765)	--	L
Total Load Defl. (in)	0.02 @ 1' 6 7/16"	0.207	Passed (L/1,906)	--	D+0.75L+0.75Lr

- Deflection criteria: floor live alone L/360 (IRC Table R301.7); roof live or snow alone L/240 (IRC Table R301.7); dead plus live L/180 (this member's own limit).
- Bending adjustment factors: CD = 1.00, CL = 1.00 (D+L).
- Beam stability: each moment checked against the bracing of its compression edge (CL = 1.00 where braced).
- Member self weight of 5.8 plf is included.
- Calculations per NDS 2018, ASD, every load combination with its own load duration factor.

	Bearing Length		Loads to Supports (lbs)				
Supports	Provided	Required	Dead	Floor Live	Roof Live	Total	Load goes to
1 @ 0	1 1/2"	1 3/16"	984	1,204	656	**2,379**	SpotFtg Hdr #25-1 (on (1) trimmer, (1) king stud)
2 @ 3'	1 1/2"	1 3/16"	984	1,204	656	**2,379**	SpotFtg Hdr #25-2 (on (1) trimmer, (1) king stud)

Total = the governing ASD combination at that support ("up": the governing uplift, where another combination lifts it); the category columns are service loads.

Lateral Bracing	Bracing Intervals	Comments
Top Edge (Lu)	continuous	braced by the sheathing
Bottom Edge (Lu)	3' o/c	used for C_L only where the bottom edge is in compression

Vertical Loads	Location	Trib. Width	Dead (0.90)	Floor Live (1.00)	Roof Live (1.25)	Comments
0 - Self Weight (PLF)	0 to 3'	N/A	5.8	--	--	
1 - Uniform (PLF)	0 to 3'	N/A	343	--	403.5	Linked from: Trusses #9, Support 3
2 - Uniform (PLF)	0 to 3'	N/A	256.6	741.2	--	Linked from: Joists #7, Support 4

Shear, Moment and Deflection

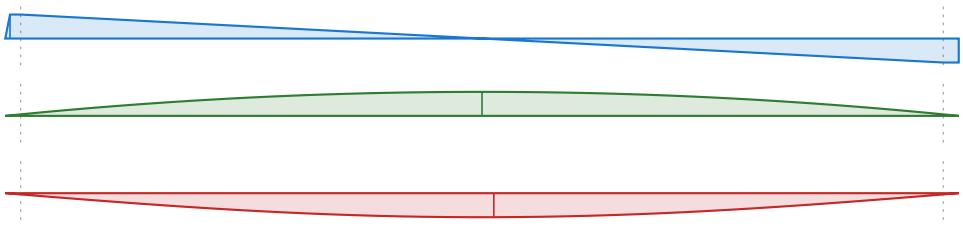

Shear (lbs)
D+L
max 2,020 @ left bearing

Moment (ft-lbs)
D+L
max 1,616 @ 1' 6"

Deflection (in)
D+0.75L+0.75Lr
0.02 in down @ 1' 6 7/16"
limit 0.207 in on the span

Header #26

(1) 4x8 SP No. 2 (3 1/2" x 7 1/4")

Level: Headers - Basement | Member type: Header (roof loads) | Length: 3' 3" | 2018 IRC | 2018 NDS | ASD

PASSED

Controls: Bearing 54% used

Section adequacy 46.2% (capacity to spare)

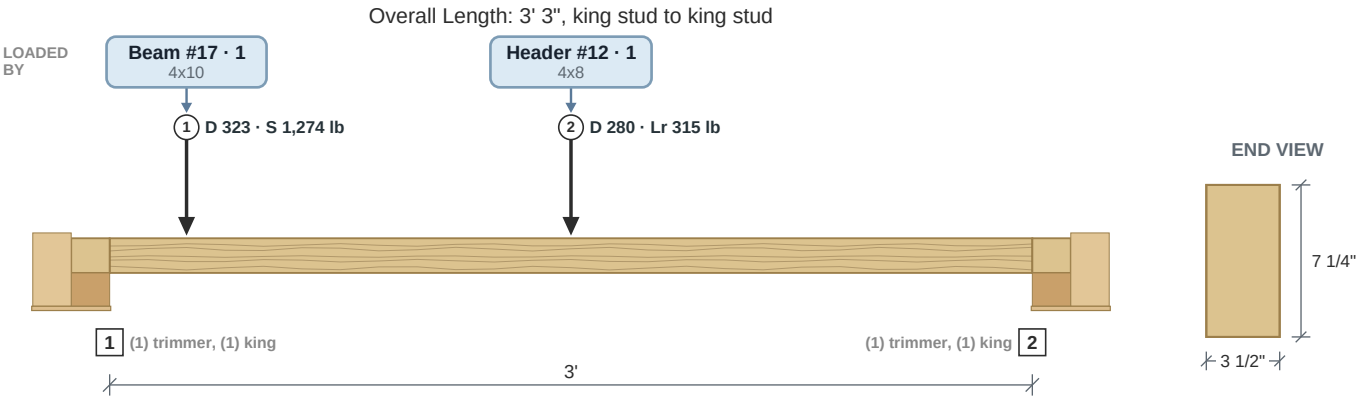

Drawing is conceptual. Locations are measured from the left end of the member; all dimensions are horizontal.

Design Results	Actual @ Location	Allowed	Result	LDF	Load Combination
Member Reaction (lbs)	1,596 @ 0	2,966 (1 1/2")	Passed (54% used)	--	
Shear (lbs)	666 @ 7 1/4"	3,404	Passed (20% used)	1.15	D+S
Moment (Ft-lbs)	504 @ 1' 6"	3,250	Passed (16% used)	1.25	D+Lr
Live Load Defl. (in)	0.002 @ 1' 3 1/2"	0.152	Passed (L/9999+)	--	S
Total Load Defl. (in)	0.005 @ 1' 4 1/4"	0.203	Passed (L/7,596)	--	D+S

- Deflection criteria: roof live or snow alone L/240 (IRC Table R301.7); dead plus live L/180 (this member's own limit).
- Bending adjustment factors: CD = 1.25, CL = 1.00 (D+Lr).
- Beam stability: each moment checked against the bracing of its compression edge (CL = 1.00 where braced).
- Member self weight of 5.8 plf is included.
- Calculations per NDS 2018, ASD, every load combination with its own load duration factor.

	Bearing Length		Loads to Supports (lbs)					
Supports	Provided	Required	Dead	Floor Live	Roof Live	Snow	Total	Load goes to
1 @ 0	1 1/2"	13/16"	441	--	156	1,155	**1,596**	SpotFtg Hdr #26-1 (on (1) trimmer, (1) king stud)
2 @ 3'	1 1/2"	3/16"	181	--	159	119	**340**	SpotFtg Hdr #26-2 (on (1) trimmer, (1) king stud)

Total = the governing ASD combination at that support ("up": the governing uplift, where another combination lifts it); the category columns are service loads.

Lateral Bracing	Bracing Intervals	Comments
Top Edge (Lu)	continuous	braced by the sheathing
Bottom Edge (Lu)	3' o/c	used for C_L only where the bottom edge is in compression

Vertical Loads	Location	Trib. Width	Dead (0.90)	Floor Live (1.00)	Roof Live (1.25)	Snow (1.15)	Comments
0 - Self Weight (PLF)	0 to 3'	N/A	5.8	--	--	--	
1 - Point (lb)	3"	N/A	323.1	0	--	1,274	Linked from: Beam #17, Support 1
2 - Point (lb)	1' 6"	N/A	279.5	--	315.4	--	Linked from: Header #12, Support 1

Shear, Moment and Deflection

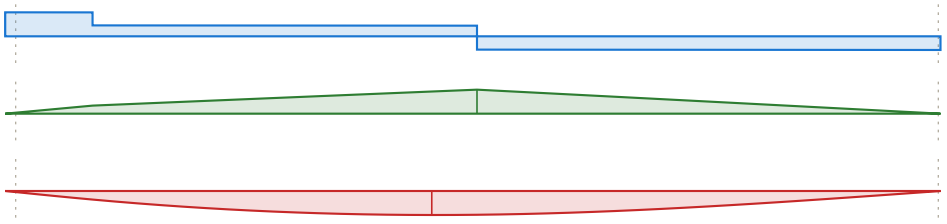

Shear (lbs)
D+Lr
max 596 @ left bearing

Moment (ft-lbs)
D+Lr
max 504 @ 1' 6"

Deflection (in)
D+S
0.005 in down @ 1' 4 1/4"
limit 0.203 in on the span

Rafters #1

PASSED

(1) 2x6 DF-L No. 2 (1 1/2" x 5 1/2") @ 24" o.c.

Controls: Moment 43% used
Section adequacy 57% (capacity to spare)

Level: Roof | Member type: Rafter (Roof Rafter) | Length: 9' (9' 1 1/2" along the slope, 2:12) | 2018 IRC | 2018 NDS | ASD

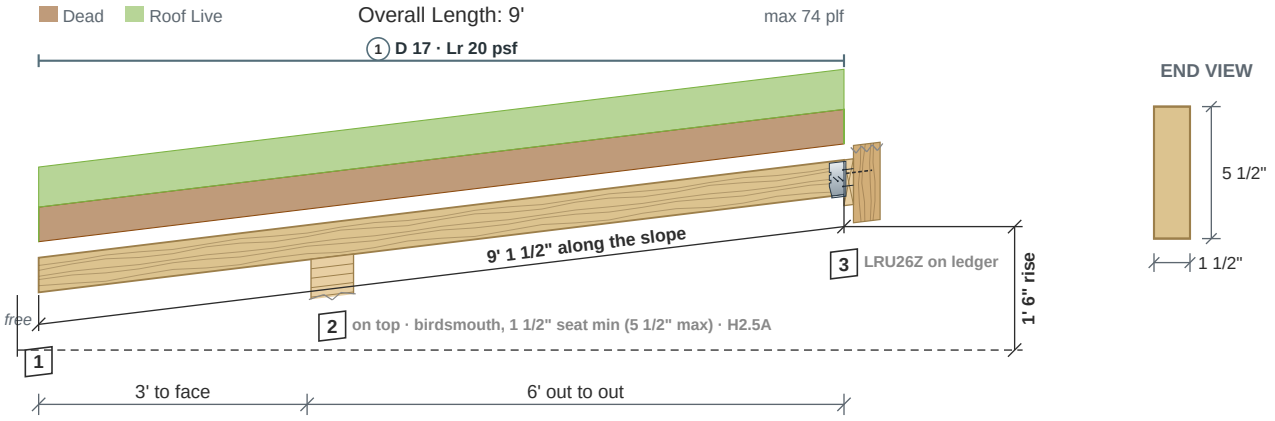

Drawing is conceptual; the slope is not to scale. Locations are measured from the left end of the member; dimensions are horizontal except its rise and its length along the slope.

Design Results	Actual @ Location	Allowed	Result	LDF	Load Combination
Member Reaction (lbs)	541 @ 3' 3 3/8"	6,328 (6 3/4")	Passed (9% used)	--	
Shear (lbs)	234 @ 4' 1/4"	1,238	Passed (19% used)	1.25	D+Lr
Neg Moment (Ft-lbs)	-411 @ 3' 3 3/8"	956	Passed (43% used)	1.25	D+Lr
Live Load Defl. (in)	0.048 @ 0	0.333	Passed (2L/1,655)	--	Lr
Total Load Defl. (in)	0.092 @ 0	0.444	Passed (2L/867)	--	D+Lr
Seat 2: Seat bearing (lbs)	541 @ 3' 3 3/8"	1,758	Passed (31% used)	--	
Seat 2: Notch depth (in)	0.247 @ 3' 3 3/8"	0.917	Passed (27% used)	--	
Seat 2: Bending over the support (Ft-lbs)	411 @ 3' 3 3/8"	967	Passed (43% used)	--	D+Lr

- Deflection criteria: roof live or snow alone L/240 (IRC Table R301.7); dead plus live L/180 (this member's own limit).
- Support 2 seat: birdsmouth, 1 1/2" seat min (5 1/2" max) · H2.5A (NDS 3.10.2; IRC R802.6 (1 1/2 in. min.); NDS 3.3; net depth at the notch; NDS 4.4.3.1 (d/6)) -- its checks are in Design Results.
- On a 2:12 slope: the gravity loads act vertically over the 9' level span, so bending and shear are the level span's; the member's own weight and its dead load are taken along its 9' 1 1/2" length on the slope, roof live and snow on the horizontal projection (ASCE 7-16 4.8, 7.3); deflection is perpendicular to the member and limited on its length along the slope.
- Overhang deflection criteria: LL (2L/240) and TL (2L/180) -- a cantilever is limited on twice its length.
- Bending adjustment factors: CD = 1.25, CF = 1.30, Cr = 1.15, CL = 0.902 (D+Lr).
- Beam stability (NDS 3.3.3) governs bending: negative moment 411 lbf-ft, 3.28-9.00 ft, CL 0.902 (unbraced 5.7 ft).
- Member self weight of 1.9 plf is included.
- Calculations per NDS 2018, ASD, every load combination with its own load duration factor.

	Bearing Length		Loads to Supports (lbs)			
Supports	**Provided**	**Required**	**Dead**	**Roof Live**	**Total**	**Load goes to**
1 @ 0	--	--	--	--	--	free end (cantilever tip)
2 @ 3' 3 3/8"	6 3/4"	3/16"	258	283	**541**	Beam #3 (bears on top)
3 @ 9'	1 15/16" seat	3/16"	70	77	**146**	not linked (hung on the 2x8 SP No. 2 ledger, in an LRU26Z rafter hanger, sloped 9.5° down in the field, 82%)

Total = the governing ASD combination at that support ("up": the governing uplift, where another combination lifts it); the category columns are service loads.
Ledger at support 3 (LEDGER Rafters #1-3): the 2x8 SP No. 2 ledger on a 2x SPF rim board (not set: assumed), 1/2" sheathing between: 3/8 x 4 lags, 2 rows staggered @ 24 in. o.c., 1 1/2" and 5 3/4" below the ledger's top, 1 1/2" from its ends; 28% to spare at D+Lr (NDS 12.3, across the gap per AWC TR12; 11.3).

Lateral Bracing	Bracing Intervals	Comments
Top Edge (Lu)	continuous	braced by the sheathing
Bottom Edge (Lu)	5' 8 5/8" o/c	governs C_L here: the bottom edge is in compression

Vertical Loads	Location	Trib. Width	Dead (0.90)	Roof Live (1.25)	Comments
0 - Self Weight (PLF)	0 to 9'	N/A	1.9	--	
1 - Uniform (PSF)	0 to 9'	24"	17	20	Typed on the member

Rafters #1 (continued)

Roof Rafter | (1) 2x6 DF-L No. 2 (1 1/2" x 5 1/2") @ 24" o.c.

Shear, Moment and Deflection

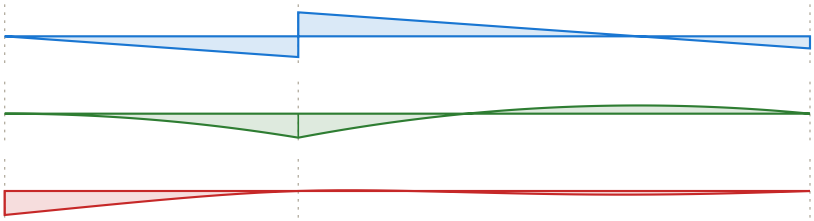

Shear (lbs)
D+Lr
max 290 @ 3' 3 3/8"

Moment (ft-lbs)
D+Lr
max -411 @ 3' 3 3/8"

Deflection (in)
D+Lr
0.092 in down @ 0
limit 0.444 in on 2L (cantilever)

Rafters #2

PASSED

(1) 2x6 DF-L No. 2 (1 1/2" x 5 1/2") @ 24" o.c.

Controls: Seat 2: Bending over the support 36% used

Level: Roof | Member type: Rafter (Roof Rafter) | Length: 7' (7' 1 3/16" along the slope, 2:12) | 2018 IRC | 2018 NDS | ASD

Section adequacy 64.4% (capacity to spare)

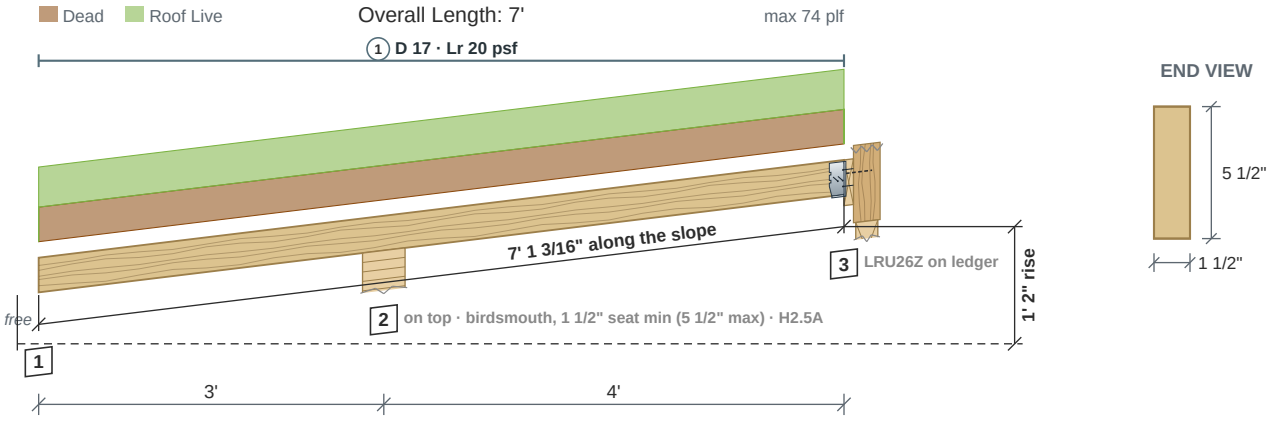

Drawing is conceptual; the slope is not to scale. Locations are measured from the left end of the member; dimensions are horizontal except its rise and its length along the slope.

Design Results	Actual @ Location	Allowed	Result	LDF	Load Combination
Member Reaction (lbs)	468 @ 3'	6,328 (6 3/4")	Passed (7% used)	--	
Shear (lbs)	182 @ 3' 8 7/8"	1,238	Passed (15% used)	1.25	D+Lr
Neg Moment (Ft-lbs)	-344 @ 3'	1,003	Passed (34% used)	1.25	D+Lr
Live Load Defl. (in)	0.043 @ 0	0.304	Passed (2L/1,699)	--	Lr
Total Load Defl. (in)	0.082 @ 0	0.406	Passed (2L/890)	--	D+Lr
Seat 2: Seat bearing (lbs)	468 @ 3'	1,758	Passed (27% used)	--	
Seat 2: Notch depth (in)	0.247 @ 3'	0.917	Passed (27% used)	--	
Seat 2: Bending over the support (Ft-lbs)	344 @ 3'	967	Passed (36% used)	--	D+Lr

- Deflection criteria: roof live or snow alone L/240 (IRC Table R301.7); dead plus live L/180 (this member's own limit).
- Support 2 seat: birdsmouth, 1 1/2" seat min (5 1/2" max) · H2.5A (NDS 3.10.2; IRC R802.6 (1 1/2 in. min.); NDS 3.3; net depth at the notch; NDS 4.4.3.1 (d/6)) -- its checks are in Design Results.
- On a 2:12 slope: the gravity loads act vertically over the 7' level span, so bending and shear are the level span's; the member's own weight and its dead load are taken along its 7' 1 3/16" length on the slope, roof live and snow on the horizontal projection (ASCE 7-16 4.8, 7.3); deflection is perpendicular to the member and limited on its length along the slope.
- Overhang deflection criteria: LL (2L/240) and TL (2L/180) -- a cantilever is limited on twice its length.
- Bending adjustment factors: CD = 1.25, CF = 1.30, Cr = 1.15, CL = 0.947 (D+Lr).
- Beam stability (NDS 3.3.3) governs bending: negative moment 344 lbf-ft, 3.00-7.00 ft, CL 0.947 (unbraced 4.0 ft).
- Member self weight of 1.9 plf is included.
- Calculations per NDS 2018, ASD, every load combination with its own load duration factor.

	Bearing Length		Loads to Supports (lbs)			
Supports	**Provided**	**Required**	**Dead**	**Roof Live**	**Total**	**Load goes to**
1 @ 0	--	--	--	--	--	free end (cantilever tip)
2 @ 3'	6 3/4"	1/8"	223	245	**468**	Beam #4 (bears on top)
3 @ 7'	1 15/16" seat	1/16"	32	35	**67**	Header #13 (hung on the 2x8 SP No. 2 ledger on a stud wall standing on it, in an LRU26Z rafter hanger, sloped 9.5° down in the field, 92%)

Total = the governing ASD combination at that support ("up": the governing uplift, where another combination lifts it); the category columns are service loads.
Ledger at support 3 (LEDGER Rafters #2-3): the 2x8 SP No. 2 ledger on 2x6 DF-L studs at 16 in., 1/2" sheathing between: (2) 1/2 x 4-1/2 lags at each stud (16 in. o.c.), from 2" below the ledger's top; 90% to spare at D+Lr (NDS 12.3, across the gap per AWC TR12; 11.3).

Lateral Bracing	Bracing Intervals	Comments
Top Edge (Lu)	continuous	braced by the sheathing
Bottom Edge (Lu)	4' o/c	governs C_L here: the bottom edge is in compression

Vertical Loads	Location	Trib. Width	Dead (0.90)	Roof Live (1.25)	Comments
0 - Self Weight (PLF)	0 to 7'	N/A	1.9	--	
1 - Uniform (PSF)	0 to 7'	24"	17	20	Typed on the member

Rafters #2 (continued)

Roof Rafter | (1) 2x6 DF-L No. 2 (1 1/2" x 5 1/2") @ 24" o.c.

Shear, Moment and Deflection

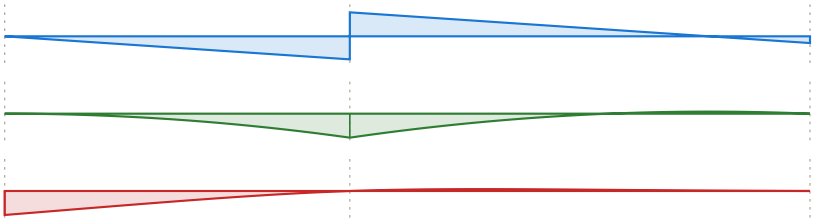

Shear (lbs)
D+Lr
max 239 @ 3'

Moment (ft-lbs)
D+Lr
max -344 @ 3'

Deflection (in)
D+Lr
0.082 in down @ 0
limit 0.406 in on 2L (cantilever)

Rafters #3

PASSED

(1) 2x8 DF-L No. 2 (1 1/2" x 7 1/4") @ 24" o.c.

Controls: Moment 53% used
Section adequacy 47.4% (capacity to spare)

Level: Roof | Member type: Rafter (Roof Rafter) | Length: 13' 6" (13' 8 1/4" along the slope, 2:12) | 2018 IRC | 2018 NDS | ASD

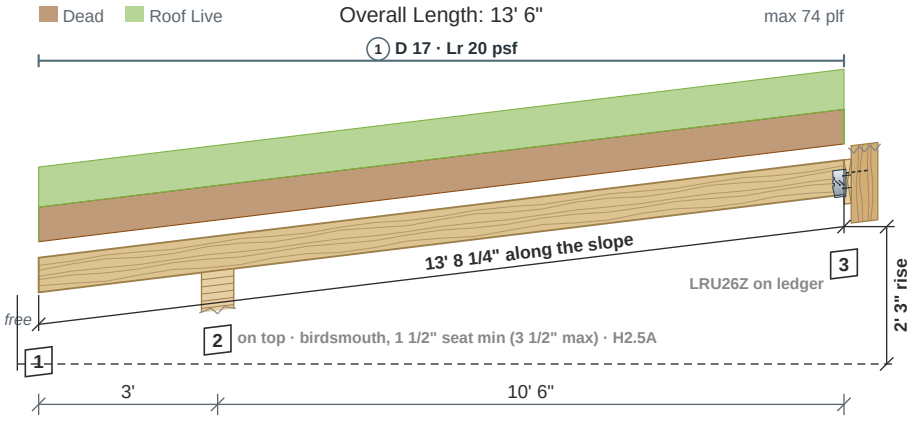

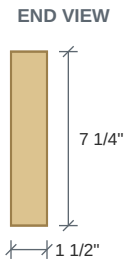

Drawing is conceptual; the slope is not to scale. Locations are measured from the left end of the member; dimensions are horizontal except its rise and its length along the slope.

Design Results	Actual @ Location	Allowed	Result	LDF	Load Combination
Member Reaction (lbs)	371 @ 13' 6"	1,816 (1 15/16")	Passed (20% used)	--	
Shear (lbs)	379 @ 3' 9"	1,631	Passed (23% used)	1.25	D+Lr
Moment (Ft-lbs)	895 @ 8' 8 1/2"	1,700	Passed (53% used)	1.25	D+Lr
Live Load Defl. (in)	0.081 @ 0	0.304	Passed (2L/897)	--	Lr
Total Load Defl. (in)	0.157 @ 0	0.406	Passed (2L/466)	--	D+Lr
Seat 2: Seat bearing (lbs)	668 @ 3'	1,758	Passed (38% used)	--	
Seat 2: Notch depth (in)	0.247 @ 3'	1.208	Passed (20% used)	--	
Seat 2: Bending over the support (Ft-lbs)	346 @ 3'	1,586	Passed (22% used)	--	D+Lr

- Deflection criteria: roof live or snow alone L/240 (IRC Table R301.7); dead plus live L/180 (this member's own limit).
- Support 2 seat: birdsmouth, 1 1/2" seat min (3 1/2" max) · H2.5A (NDS 3.10.2; IRC R802.6 (1 1/2 in. min.); NDS 3.3; net depth at the notch; NDS 4.4.3.1 (d/6)) -- its checks are in Design Results.
- On a 2:12 slope: the gravity loads act vertically over the 13' 6" level span, so bending and shear are the level span's; the member's own weight and its dead load are taken along its 13' 8 1/4" length on the slope, roof live and snow on the horizontal projection (ASCE 7-16 4.8, 7.3); deflection is perpendicular to the member and limited on its length along the slope.
- Overhang deflection criteria: LL (2L/240) and TL (2L/180) -- a cantilever is limited on twice its length.
- Bending adjustment factors: CD = 1.25, CF = 1.20, Cr = 1.15, CL = 1.00 (D+Lr).
- Beam stability: each moment checked against the bracing of its compression edge (CL = 1.00 where braced).
- Member self weight of 2.5 plf is included.
- Calculations per NDS 2018, ASD, every load combination with its own load duration factor.

	Bearing Length		Loads to Supports (lbs)			
Supports	**Provided**	**Required**	**Dead**	**Roof Live**	**Total**	**Load goes to**
1 @ 0	--	--	--	--	--	free end (cantilever tip)
2 @ 3'	3 1/2"	5/16"	321	347	**668**	Beam #5, Beam #6 (bears on top)
3 @ 13' 6"	1 15/16" seat	3/8"	178	193	**371**	Header #14, Footing #9 (hung on the 2x10 SP No. 2 ledger, in an LRU26Z rafter hanger, sloped 9.5° down in the field, 54%)

Total = the governing ASD combination at that support ("up": the governing uplift, where another combination lifts it); the category columns are service loads.
Ledger at support 3 (LEDGER Rafters #3-3): the 2x10 SP No. 2 ledger on 2x6 DF-L studs at 16 in., 1/2" sheathing between: (2) 1/2 x 4-1/2 lags at each stud (16 in. o.c.), from 2" below the ledger's top; 45% to spare at D+Lr (NDS 12.3, across the gap per AWC TR12; 11.3).

Lateral Bracing	Bracing Intervals	Comments
Top Edge (Lu)	continuous	braced by the sheathing
Bottom Edge (Lu)	10' 6" o/c	used for C_L only where the bottom edge is in compression

Vertical Loads	Location	Trib. Width	Dead (0.90)	Roof Live (1.25)	Comments
0 - Self Weight (PLF)	0 to 13' 6"	N/A	2.5	--	
1 - Uniform (PSF)	0 to 13' 6"	24"	17	20	Typed on the member

Rafters #3 (continued)

Roof Rafter | (1) 2x8 DF-L No. 2 (1 1/2" x 7 1/4") @ 24" o.c.

Shear, Moment and Deflection

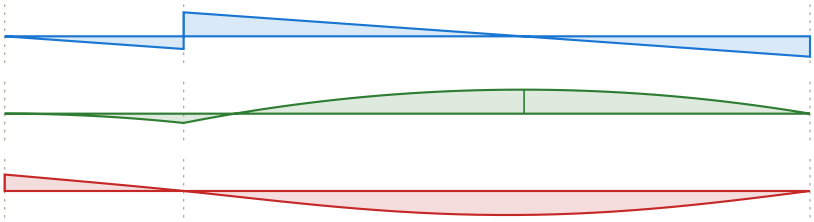

Shear (lbs)
D+Lr
max 437 @ 3'

Moment (ft-lbs)
D+Lr
max 895 @ 8' 8 1/2"

Deflection (in)
D+Lr
0.157 in up @ 0
limit 0.406 in on 2L (cantilever)

Rafters #4

PASSED

(1) 2x8 DF-L No. 2 (1 1/2" x 7 1/4") @ 24" o.c.

Controls: Seat 2: Seat bearing 30% used

Section adequacy 70.4% (capacity to spare)

Level: Roof | Member type: Rafter (Roof Rafter) | Length: 9' (9' 1 1/2" along the slope, 2:12) | 2018 IRC | 2018 NDS | ASD

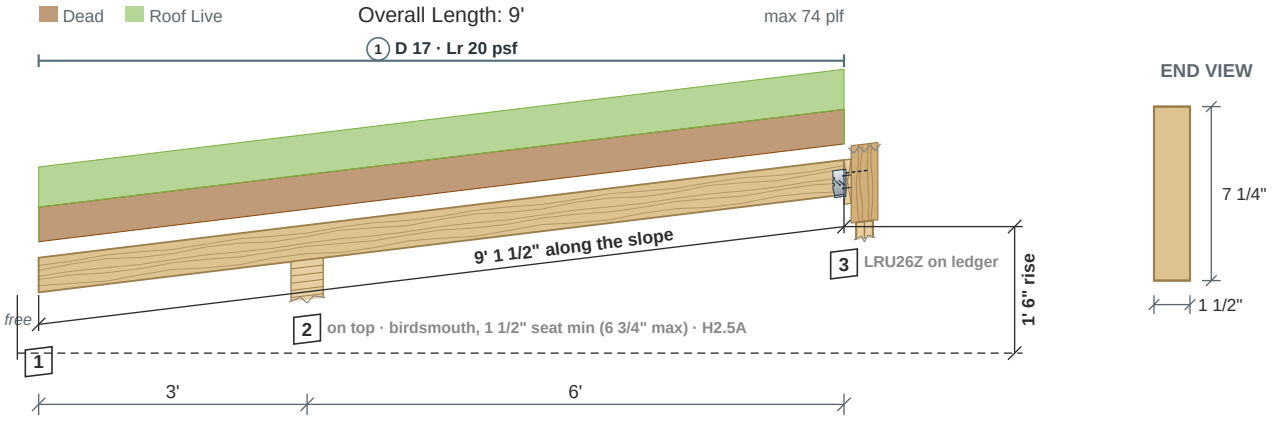

Drawing is conceptual; the slope is not to scale. Locations are measured from the left end of the member; dimensions are horizontal except its rise and its length along the slope.

Design Results	Actual @ Location	Allowed	Result	LDF	Load Combination
Member Reaction (lbs)	173 @ 9'	1,816 (1 15/16")	Passed (10% used)	--	
Shear (lbs)	220 @ 3' 10 5/8"	1,631	Passed (14% used)	1.25	D+Lr
Neg Moment (Ft-lbs)	-346 @ 3'	1,390	Passed (25% used)	1.25	D+Lr
Live Load Defl. (in)	0.009 @ 0	0.304	Passed (2L/7,734)	--	Lr
Total Load Defl. (in)	0.018 @ 0	0.406	Passed (2L/4,019)	--	D+Lr
Seat 2: Seat bearing (lbs)	520 @ 3'	1,758	Passed (30% used)	--	
Seat 2: Notch depth (in)	0.247 @ 3'	1.208	Passed (20% used)	--	
Seat 2: Bending over the support (Ft-lbs)	346 @ 3'	1,586	Passed (22% used)	--	D+Lr

- Deflection criteria: roof live or snow alone L/240 (IRC Table R301.7); dead plus live L/180 (this member's own limit).
- Support 2 seat: birdsmouth, 1 1/2" seat min (6 3/4" max) · H2.5A (NDS 3.10.2; IRC R802.6 (1 1/2 in. min.); NDS 3.3; net depth at the notch; NDS 4.4.3.1 (d/6)) -- its checks are in Design Results.
- On a 2:12 slope: the gravity loads act vertically over the 9' level span, so bending and shear are the level span's; the member's own weight and its dead load are taken along its 9' 1 1/2" length on the slope, roof live and snow on the horizontal projection (ASCE 7-16 4.8, 7.3); deflection is perpendicular to the member and limited on its length along the slope.
- Overhang deflection criteria: LL (2L/240) and TL (2L/180) -- a cantilever is limited on twice its length.
- Bending adjustment factors: CD = 1.25, CF = 1.20, Cr = 1.15, CL = 0.817 (D+Lr).
- Beam stability (NDS 3.3.3) governs bending: negative moment 346 lbf-ft, 3.00-9.00 ft, CL 0.817 (unbraced 6.0 ft).
- Member self weight of 2.5 plf is included.
- Calculations per NDS 2018, ASD, every load combination with its own load duration factor.

	Bearing Length		Loads to Supports (lbs)			
Supports	**Provided**	**Required**	**Dead**	**Roof Live**	**Total**	**Load goes to**
1 @ 0	--	--	--	--	--	free end (cantilever tip)
2 @ 3'	6 3/4"	3/16"	250	270	**520**	Beam #6 (bears on top)
3 @ 9'	1 15/16" seat	3/16"	83	90	**173**	Header #16, Header #18 (hung on the 2x10 HF No. 2 ledger (not set: assumed) on a stud wall standing on it, in an LRU26Z rafter hanger, sloped 9.5° down in the field, 75%)

Total = the governing ASD combination at that support ("up": the governing uplift, where another combination lifts it); the category columns are service loads.
Ledger at support 3 (LEDGER Rafters #4-3): the 2x10 HF No. 2 ledger (not set: assumed) on 2x6 SP studs at 16 in., 1/2" sheathing between: (2) 1/2 x 4-1/2 lags at each stud (16 in. o.c.), from 2" below the ledger's top; 69% to spare at D+Lr (NDS 12.3, across the gap per AWC TR12; 11.3).

Lateral Bracing	Bracing Intervals	Comments
Top Edge (Lu)	continuous	braced by the sheathing
Bottom Edge (Lu)	6' o/c	governs C_L here: the bottom edge is in compression

Vertical Loads	Location	Trib. Width	Dead (0.90)	Roof Live (1.25)	Comments
0 - Self Weight (PLF)	0 to 9'	N/A	2.5	--	
1 - Uniform (PSF)	0 to 9'	24"	17	20	Typed on the member

Rafters #4 (continued)

Roof Rafter | (1) 2x8 DF-L No. 2 (1 1/2" x 7 1/4") @ 24" o.c.

Shear, Moment and Deflection

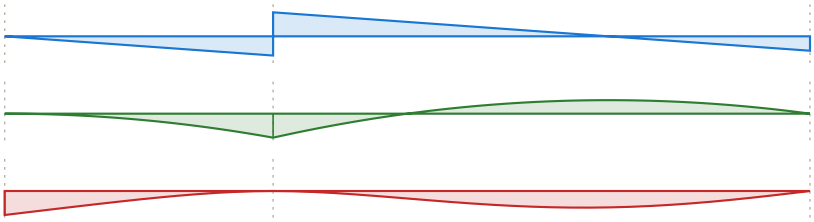

Shear (lbs)
D+Lr
max 289 @ 3'

Moment (ft-lbs)
D+Lr
max -346 @ 3'

Deflection (in)
D+Lr
0.018 in down @ 0
limit 0.406 in on 2L (cantilever)

Rafters #6

PASSED

(1) 2x8 SP No. 2 (1 1/2" x 7 1/4") @ 16" o.c.

Controls: Moment 56% used

Level: Roof | Member type: Rafter (Roof Rafter) | Length: 15' (15' 5/8" along the slope, 1:12) | 2018 IRC | 2018 NDS | ASD

Section adequacy 43.6% (capacity to spare)

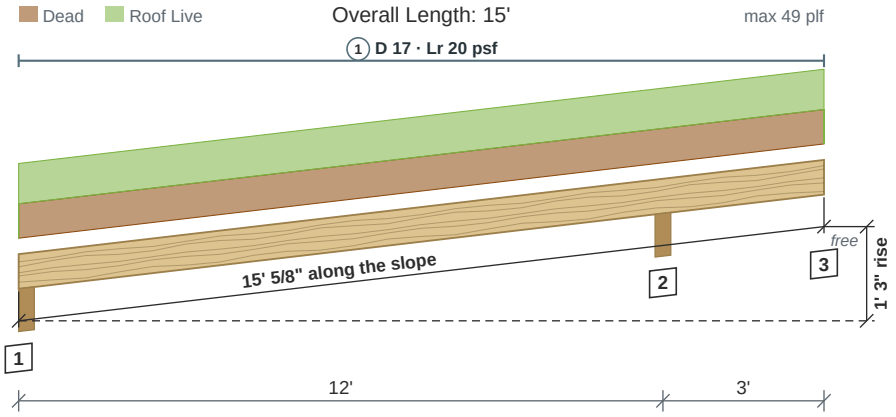

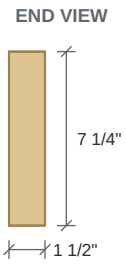

Drawing is conceptual; the slope is not to scale. Locations are measured from the left end of the member; dimensions are horizontal except its rise and its length along the slope.

Design Results	Actual @ Location	Allowed	Result	LDF	Load Combination
Member Reaction (lbs)	486 @ 12'	3,284 (3 1/2")	Passed (15% used)	--	
Shear (lbs)	331 @ 12'	1,586	Passed (21% used)	1.25	D+Lr
Moment (Ft-lbs)	821 @ 5' 7 1/2"	1,456	Passed (56% used)	1.25	D+Lr
Live Load Defl. (in)	0.106 @ 15'	0.301	Passed (2L/684)	--	Lr
Total Load Defl. (in)	0.206 @ 15'	0.401	Passed (2L/351)	--	D+Lr

- Deflection criteria: roof live or snow alone L/240 (IRC Table R301.7); dead plus live L/180 (this member's own limit).
- On a 1:12 slope: the gravity loads act vertically over the 15' level span, so bending and shear are the level span's; the member's own weight and its dead load are taken along its 15' 5/8" length on the slope, roof live and snow on the horizontal projection (ASCE 7-16 4.8, 7.3); deflection is perpendicular to the member and limited on its length along the slope.
- Overhang deflection criteria: LL (2L/240) and TL (2L/180) -- a cantilever is limited on twice its length.
- Bending adjustment factors: CD = 1.25, Cr = 1.15, CL = 1.00 (D+Lr).
- Beam stability: each moment checked against the bracing of its compression edge (CL = 1.00 where braced).
- Member self weight of 2.5 plf is included.
- Calculations per NDS 2018, ASD, every load combination with its own load duration factor.

	Bearing Length		Loads to Supports (lbs)			
Supports	Provided	Required	Dead	Roof Live	Total	Load goes to
1 @ 0	3 1/2"	5/16"	142	150	**292**	not linked
2 @ 12'	3 1/2"	3/16"	237	250	**487**	not linked
3 @ 15'	--	--	--	--	--	free end (cantilever tip)

Total = the governing ASD combination at that support ("up": the governing uplift, where another combination lifts it); the category columns are service loads.

Lateral Bracing	Bracing Intervals	Comments
Top Edge (Lu)	continuous	braced by the sheathing
Bottom Edge (Lu)	12' o/c	used for C_L only where the bottom edge is in compression

Vertical Loads	Location	Trib. Width	Dead (0.90)	Roof Live (1.25)	Comments
0 - Self Weight (PLF)	0 to 15'	N/A	2.5	--	
1 - Uniform (PSF)	0 to 15'	16"	17	20	Typed on the member

Shear, Moment and Deflection

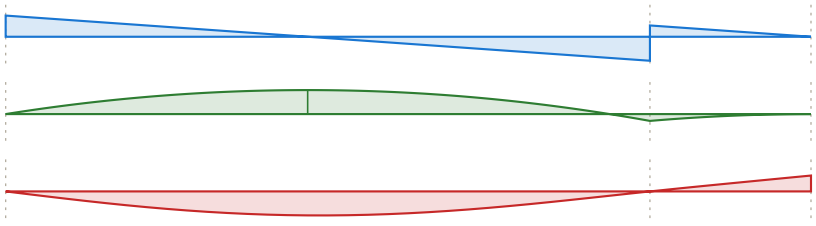

Shear (lbs)
D+Lr
max -331 @ 12'

Moment (ft-lbs)
D+Lr
max 821 @ 5' 7 1/2"

Deflection (in)
D+Lr
0.206 in up @ 15'
limit 0.401 in on 2L (cantilever)

Rafters #8

PASSED

(1) 2x10 SP No. 2 (1 1/2" x 9 1/4") @ 24" o.c.

Controls: Moment 65% used
Section adequacy 34.6% (capacity to spare)

Level: Roof | Member type: Rafter (Roof Rafter) | Length: 15' 6" (15' 6 5/8" along the slope, 1:12) | 2018 IRC | 2018 NDS | ASD

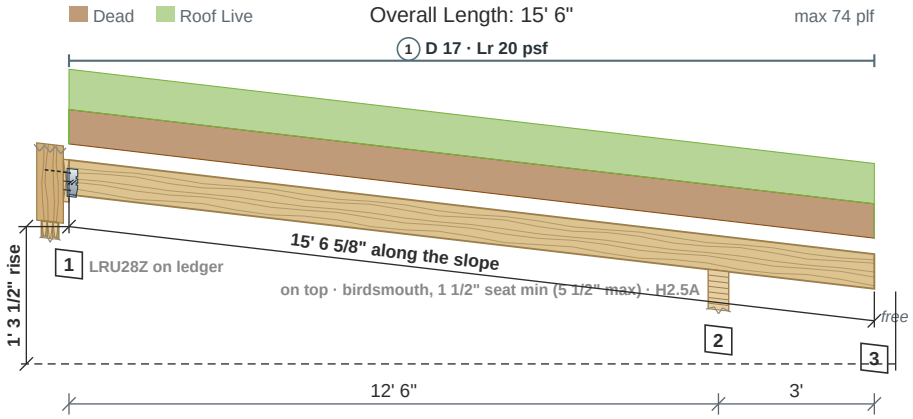

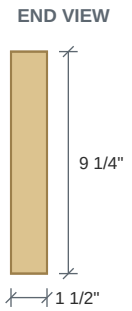

Drawing is conceptual; the slope is not to scale. Locations are measured from the left end of the member; dimensions are horizontal except its rise and its length along the slope.

Design Results	Actual @ Location	Allowed	Result	LDF	Load Combination
Member Reaction (lbs)	455 @ 0	1,642 (1 15/16")	Passed (28% used)	--	
Shear (lbs)	455 @ 0	2,024	Passed (22% used)	1.25	D+Lr
Moment (Ft-lbs)	1,341 @ 5' 10 11/16"	2,050	Passed (65% used)	1.25	D+Lr
Live Load Defl. (in)	0.089 @ 15' 6"	0.301	Passed (2L/809)	--	Lr
Total Load Defl. (in)	0.173 @ 15' 6"	0.401	Passed (2L/419)	--	D+Lr
Seat 2: Seat bearing (lbs)	743 @ 12' 6"	1,589	Passed (47% used)	--	
Seat 2: Notch depth (in)	0.125 @ 12' 6"	1.542	Passed (8% used)	--	
Seat 2: Bending over the support (Ft-lbs)	348 @ 12' 6"	1,995	Passed (17% used)	--	D+Lr

- Deflection criteria: roof live or snow alone L/240 (IRC Table R301.7); dead plus live L/180 (this member's own limit).
- Support 2 seat: birdsmouth, 1 1/2" seat min (5 1/2" max) · H2.5A (NDS 3.10.2; IRC R802.6 (1 1/2 in. min.); NDS 3.3; net depth at the notch; NDS 4.4.3.1 (d/6)) -- its checks are in Design Results.
- On a 1:12 slope: the gravity loads act vertically over the 15' 6" level span, so bending and shear are the level span's; the member's own weight and its dead load are taken along its 15' 6 5/8" length on the slope, roof live and snow on the horizontal projection (ASCE 7-16 4.8, 7.3); deflection is perpendicular to the member and limited on its length along the slope.
- Overhang deflection criteria: LL (2L/240) and TL (2L/180) -- a cantilever is limited on twice its length.
- Bending adjustment factors: CD = 1.25, Cr = 1.15, CL = 1.00 (D+Lr).
- Beam stability: each moment checked against the bracing of its compression edge (CL = 1.00 where braced).
- Member self weight of 3.2 plf is included.
- Calculations per NDS 2018, ASD, every load combination with its own load duration factor.

	Bearing Length		Loads to Supports (lbs)			
Supports	**Provided**	**Required**	**Dead**	**Roof Live**	**Total**	**Load goes to**
1 @ 0	1 15/16" seat	9/16"	220	236	**455**	Header #10 (hung on the 2x12 SP No. 2 ledger on a stud wall standing on it, in an LRU28Z rafter hanger, sloped 4.8° down in the field, 46%)
2 @ 12' 6"	5 1/2"	1/2"	358	384	**743**	Beam #1 (bears on top)
3 @ 15' 6"	--	--	--	--	--	free end (cantilever tip)

Total = the governing ASD combination at that support ("up": the governing uplift, where another combination lifts it); the category columns are service loads.
Ledger at support 1 (LEDGER Rafters #8-1): the 2x12 SP No. 2 ledger on 2x6 DF-L studs at 16 in., 1/2" sheathing between: (2) 1/2 x 4-1/2 lags at each stud (16 in. o.c.), from 2" below the ledger's top; 33% to spare at D+Lr (NDS 12.3, across the gap per AWC TR12; 11.3).

Lateral Bracing	Bracing Intervals	Comments
Top Edge (Lu)	continuous	braced by the sheathing
Bottom Edge (Lu)	12' 6" o/c	used for C_L only where the bottom edge is in compression

Vertical Loads	Location	Trib. Width	Dead (0.90)	Roof Live (1.25)	Comments
0 - Self Weight (PLF)	0 to 15' 6"	N/A	3.2	--	
1 - Uniform (PSF)	0 to 15' 6"	24"	17	20	Typed on the member

Rafters #8 (continued)

Roof Rafter | (1) 2x10 SP No. 2 (1 1/2" x 9 1/4") @ 24" o.c.

Shear, Moment and Deflection

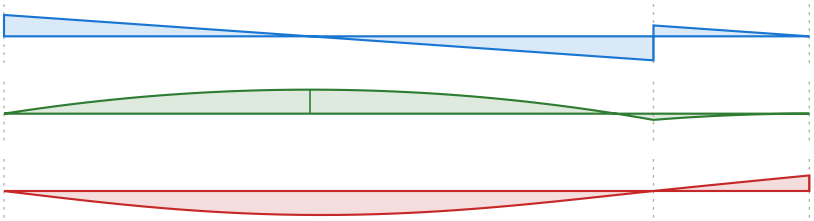

Shear (lbs)
D+Lr
max -511 @ 12' 6"

Moment (ft-lbs)
D+Lr
max 1,341 @ 5' 10 11/16"

Deflection (in)
D+Lr
0.173 in up @ 15' 6"
limit 0.401 in on 2L (cantilever)

Rafters #12

(1) 14" Weyerhaeuser TJI 110 @ 24" o.c.

Level: Roof | Member type: Rafter (Roof Rafter) | Length: 6' | 2018 IRC | 2018 NDS | ASD

PASSED

Controls: Bearing 19% used

Section adequacy 80.9% (capacity to spare)

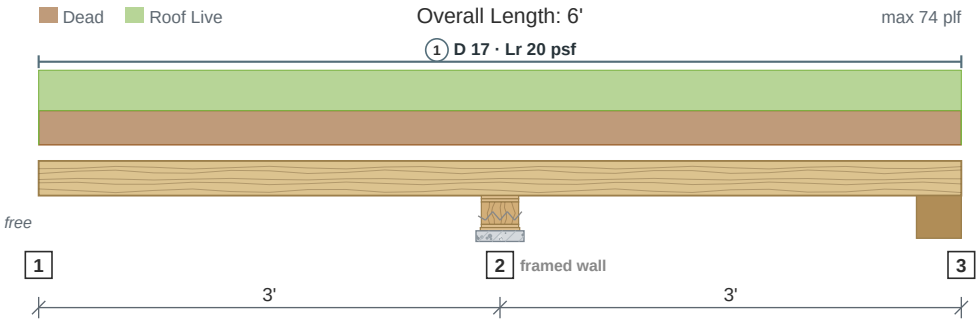

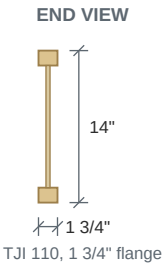

Drawing is conceptual. Locations are measured from the left end of the member; all dimensions are horizontal.

Design Results	Actual @ Location	Allowed	Result	LDF	Load Combination
Member Reaction (lbs)	461 @ 3'	2,419 (3 1/2")	Passed (19% used)	--	D+Lr
Shear (lbs)	230 @ 3'	2,325	Passed (10% used)	1.25	D+Lr
Moment (Ft-lbs)	346 @ 6'	4,675	Passed (7% used)	1.25	D+Lr
Live Load Defl. (in)	0.006 @ 0	0.3	Passed (2L/9999+)	--	Lr
Total Load Defl. (in)	0.012 @ 0	0.4	Passed (2L/5,940)	--	D+Lr

- Deflection criteria: roof live or snow alone L/240 (IRC Table R301.7); dead plus live L/180 (this member's own limit).
- Overhang deflection criteria: LL (2L/240) and TL (2L/180) -- a cantilever is limited on twice its length.
- Member self weight of 2.8 plf is included.
- Calculations per NDS 2018 and Weyerhaeuser TJ-4000 / ICC-ES ESR-1153, ASD, every load combination with its own load duration factor.

	Bearing Length		Loads to Supports (lbs)			
Supports	**Provided**	**Required**	**Dead**	**Roof Live**	**Total**	**Load goes to**
1 @ 0	--	--	--	--	--	free end (cantilever tip)
2 @ 3'	3 1/2"	--	221	240	**461**	Footing #8 (a framed wall down to the foundation)
3 @ 6'	3 1/2"	--	--	--	**0**	not linked

Total = the governing ASD combination at that support ("up": the governing uplift, where another combination lifts it); the category columns are service loads.

Lateral Bracing	Bracing Intervals	Comments
Top Flange (Lu)	continuous	braced by the sheathing
Bottom Flange (Lu)	3' o/c	bracing per the manufacturer's details

Vertical Loads	Location	Trib. Width	Dead (0.90)	Roof Live (1.25)	Comments
0 - Self Weight (PLF)	0 to 6'	N/A	2.8	--	
1 - Uniform (PSF)	0 to 6'	24"	17	20	Typed on the member

Shear, Moment and Deflection

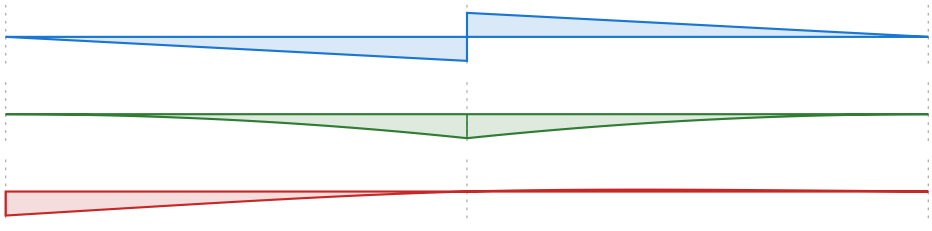

Shear (lbs)
D+Lr
max 230 @ 3'

Moment (ft-lbs)
D+Lr
max -346 @ 3'

Deflection (in)
D+Lr
0.012 in down @ 0 (shear incl.)
limit 0.4 in on 2L (cantilever)

Rafters #13

PASSED

(1) 2x4 SP No. 2 (1 1/2" x 3 1/2") @ 24" o.c.

Level: Roof | Member type: Rafter (Roof Rafter) | Length: 6' | 2018 IRC | 2018 NDS | ASD

Controls: Deflection 88% used
Section adequacy 12.3% (capacity to spare)

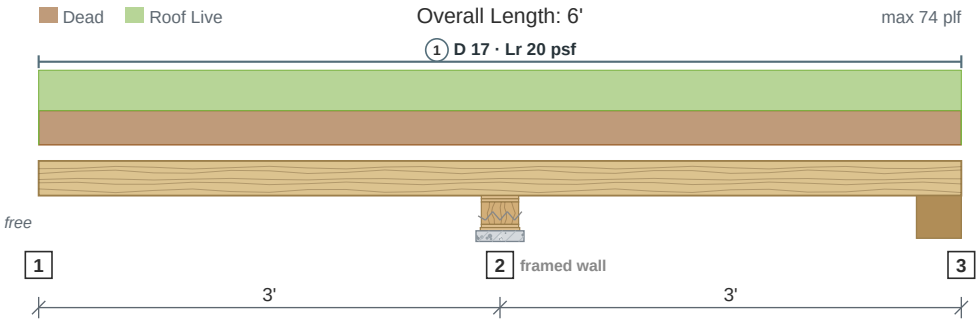

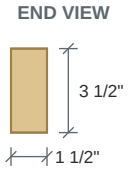

Drawing is conceptual. Locations are measured from the left end of the member; all dimensions are horizontal.

Design Results	Actual @ Location	Allowed	Result	LDF	Load Combination
Member Reaction (lbs)	451 @ 3'	3,284 (3 1/2")	Passed (14% used)	--	
Shear (lbs)	193 @ 2' 6 3/4"	766	Passed (25% used)	1.25	D+Lr
Neg Moment (Ft-lbs)	-338 @ 3'	396	Passed (85% used)	1.25	D+Lr
Live Load Defl. (in)	0.187 @ 0	0.3	Passed (2L/386)	--	Lr
Total Load Defl. (in)	0.351 @ 0	0.4	Passed (2L/205)	--	D+Lr

- Deflection criteria: roof live or snow alone L/240 (IRC Table R301.7); dead plus live L/180 (this member's own limit).
- Overhang deflection criteria: LL (2L/240) and TL (2L/180) -- a cantilever is limited on twice its length.
- Bending adjustment factors: CD = 1.25, Cr = 1.15, CL = 0.982 (D+Lr).
- Beam stability (NDS 3.3.3) governs bending: negative moment 338 lbf-ft, 0.00-3.00 ft, CL 0.982 (unbraced 3.0 ft).
- Member self weight of 1.2 plf is included.
- Calculations per NDS 2018, ASD, every load combination with its own load duration factor.

	Bearing Length		Loads to Supports (lbs)			
Supports	Provided	Required	Dead	Roof Live	Total	Load goes to
1 @ 0	--	--	--	--	--	free end (cantilever tip)
2 @ 3'	3 1/2"	3/16"	211	240	**451**	Header #1, Footing #4 (a framed wall down to the foundation)
3 @ 6'	3 1/2"	--	--	--	**0**	not linked

Total = the governing ASD combination at that support ("up": the governing uplift, where another combination lifts it); the category columns are service loads.

Lateral Bracing	Bracing Intervals	Comments
Top Edge (Lu)	continuous	braced by the sheathing
Bottom Edge (Lu)	3' o/c	governs C_L here: the bottom edge is in compression

Vertical Loads	Location	Trib. Width	Dead (0.90)	Roof Live (1.25)	Comments
0 - Self Weight (PLF)	0 to 6'	N/A	1.2	--	
1 - Uniform (PSF)	0 to 6'	24"	17	20	Typed on the member

Shear, Moment and Deflection

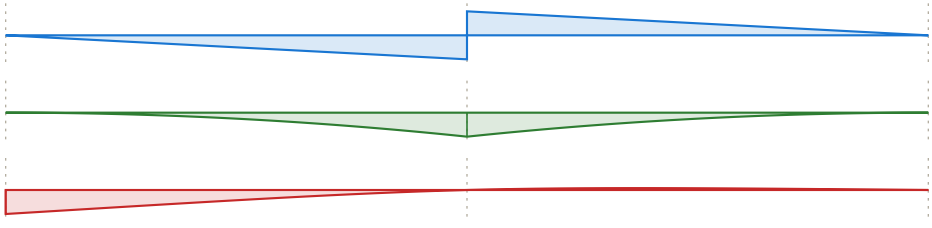

Shear (lbs)
D+Lr
max 226 @ 3'

Moment (ft-lbs)
D+Lr
max -338 @ 3'

Deflection (in)
D+Lr
0.351 in down @ 0
limit 0.4 in on 2L (cantilever)

Rafters #14

(1) 14" Weyerhaeuser TJI 110 @ 24" o.c.

Level: Roof | Member type: Rafter (Roof Rafter) | Length: 7' | 2018 IRC | 2018 NDS | ASD

PASSED

Controls: Bearing 19% used

Section adequacy 80.6% (capacity to spare)

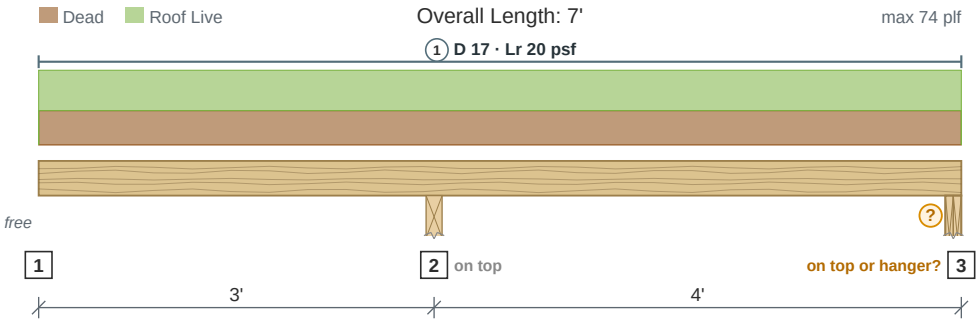

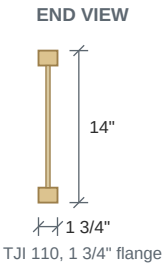

Drawing is conceptual. Locations are measured from the left end of the member; all dimensions are horizontal.

Design Results	Actual @ Location	Allowed	Result	LDF	Load Combination
Member Reaction (lbs)	470 @ 3'	2,419 (3 1/2")	Passed (19% used)	--	D+Lr
Shear (lbs)	240 @ 3'	2,325	Passed (10% used)	1.25	D+Lr
Moment (Ft-lbs)	346 @ 6' 1 1/2"	4,675	Passed (7% used)	1.25	D+Lr
Live Load Defl. (in)	0.006 @ 0	0.3	Passed (2L/9999+)	--	Lr
Total Load Defl. (in)	0.012 @ 0	0.4	Passed (2L/5,960)	--	D+Lr

- Deflection criteria: roof live or snow alone L/240 (IRC Table R301.7); dead plus live L/180 (this member's own limit).
- Overhang deflection criteria: LL (2L/240) and TL (2L/180) -- a cantilever is limited on twice its length.
- Member self weight of 2.8 plf is included.
- Calculations per NDS 2018 and Weyerhaeuser TJ-4000 / ICC-ES ESR-1153, ASD, every load combination with its own load duration factor.

	Bearing Length		Loads to Supports (lbs)			
Supports	**Provided**	**Required**	**Dead**	**Roof Live**	**Total**	**Load goes to**
1 @ 0	--	--	--	--	--	free end (cantilever tip)
2 @ 3'	3 1/2"	--	225	245	**470**	Header #8, Beam #12 (bears on top)
3 @ 7'	3 1/2"	--	32	35	**67**	Girder #2 (on top or in a hanger? not set -- checked as bearing on top)

Total = the governing ASD combination at that support ("up": the governing uplift, where another combination lifts it); the category columns are service loads.

Lateral Bracing	Bracing Intervals	Comments
Top Flange (Lu)	continuous	braced by the sheathing
Bottom Flange (Lu)	4' o/c	bracing per the manufacturer's details

Vertical Loads	Location	Trib. Width	Dead (0.90)	Roof Live (1.25)	Comments
0 - Self Weight (PLF)	0 to 7'	N/A	2.8	--	
1 - Uniform (PSF)	0 to 7'	24"	17	20	Typed on the member

Shear, Moment and Deflection

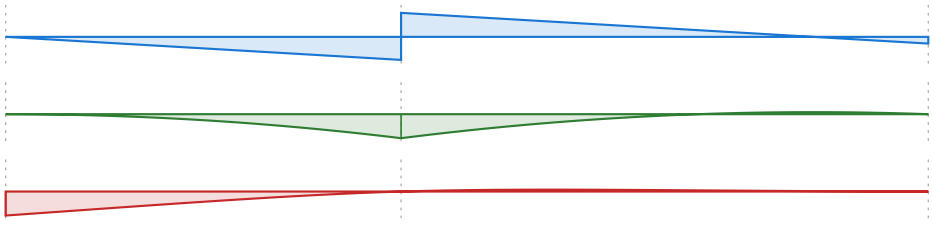

Shear (lbs)
D+Lr
max 240 @ 3'

Moment (ft-lbs)
D+Lr
max -346 @ 3'

Deflection (in)
D+Lr
0.012 in down @ 0 (shear incl.)
limit 0.4 in on 2L (cantilever)

Rafters #15

PASSED

(1) 2x4 SP No. 2 (1 1/2" x 3 1/2") @ 24" o.c.

Controls: Deflection 87% used

Level: Roof | Member type: Rafter (Roof Rafter) | Length: 7' | 2018 IRC | 2018 NDS | ASD

Section adequacy 12.9% (capacity to spare)

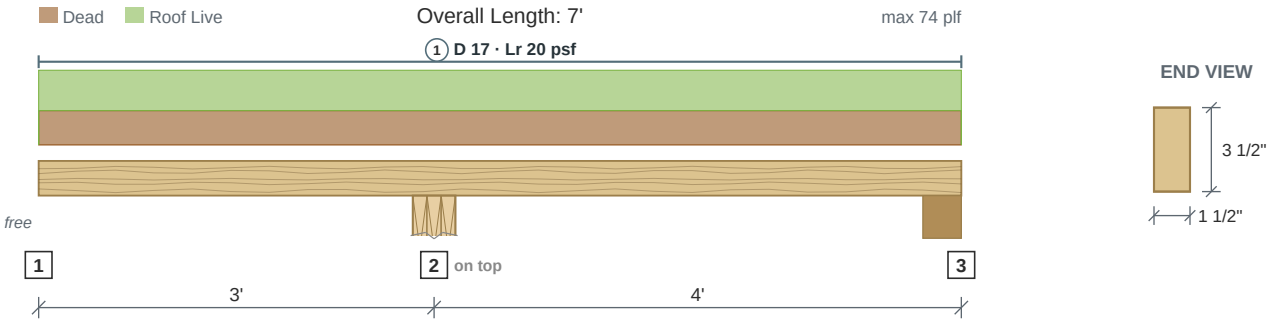

Drawing is conceptual. Locations are measured from the left end of the member; all dimensions are horizontal.

Design Results	Actual @ Location	Allowed	Result	LDF	Load Combination
Member Reaction (lbs)	461 @ 3'	3,284 (3 1/2")	Passed (14% used)	--	
Shear (lbs)	202 @ 3' 5 1/4"	766	Passed (26% used)	1.25	D+Lr
Neg Moment (Ft-lbs)	-338 @ 3'	393	Passed (86% used)	1.25	D+Lr
Live Load Defl. (in)	0.185 @ 0	0.3	Passed (2L/388)	--	Lr
Total Load Defl. (in)	0.349 @ 0	0.4	Passed (2L/207)	--	D+Lr

- Deflection criteria: roof live or snow alone L/240 (IRC Table R301.7); dead plus live L/180 (this member's own limit).
- Overhang deflection criteria: LL (2L/240) and TL (2L/180) -- a cantilever is limited on twice its length.
- Bending adjustment factors: CD = 1.25, Cr = 1.15, CL = 0.974 (D+Lr).
- Beam stability (NDS 3.3.3) governs bending: negative moment 338 lbf-ft, 3.00-7.00 ft, CL 0.974 (unbraced 4.0 ft).
- Member self weight of 1.2 plf is included.
- Calculations per NDS 2018, ASD, every load combination with its own load duration factor.

	Bearing Length		Loads to Supports (lbs)			
Supports	Provided	Required	Dead	Roof Live	Total	Load goes to
1 @ 0	--	--	--	--	--	free end (cantilever tip)
2 @ 3'	3 1/2"	3/16"	216	245	**461**	Header #9, Header #22 (bears on top)
3 @ 7'	3 1/2"	1/16"	31	35	**66**	not linked

Total = the governing ASD combination at that support ("up": the governing uplift, where another combination lifts it); the category columns are service loads.

Lateral Bracing	Bracing Intervals	Comments
Top Edge (Lu)	continuous	braced by the sheathing
Bottom Edge (Lu)	4' o/c	governs C_L here: the bottom edge is in compression

Vertical Loads	Location	Trib. Width	Dead (0.90)	Roof Live (1.25)	Comments
0 - Self Weight (PLF)	0 to 7'	N/A	1.2	--	
1 - Uniform (PSF)	0 to 7'	24"	17	20	Typed on the member

Shear, Moment and Deflection

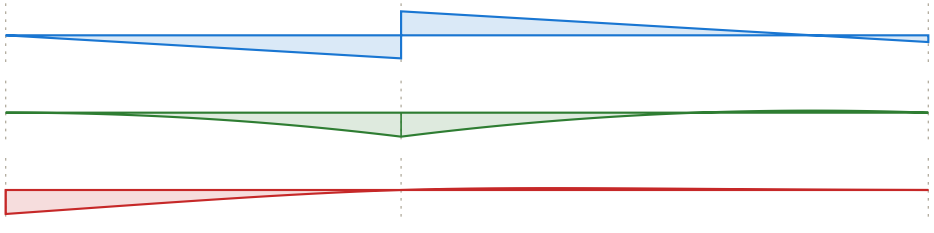

Shear (lbs)
D+Lr
max 235 @ 3'

Moment (ft-lbs)
D+Lr
max -338 @ 3'

Deflection (in)
D+Lr
0.349 in down @ 0
limit 0.4 in on 2L (cantilever)

Trusses #1

Roof truss (generic) @ 24" o.c.

Level: Roof | Length: 19' | 2018 IRC | 2018 NDS | ASD

LOADS ONLY

Generic member for linked loads
no member size or design check

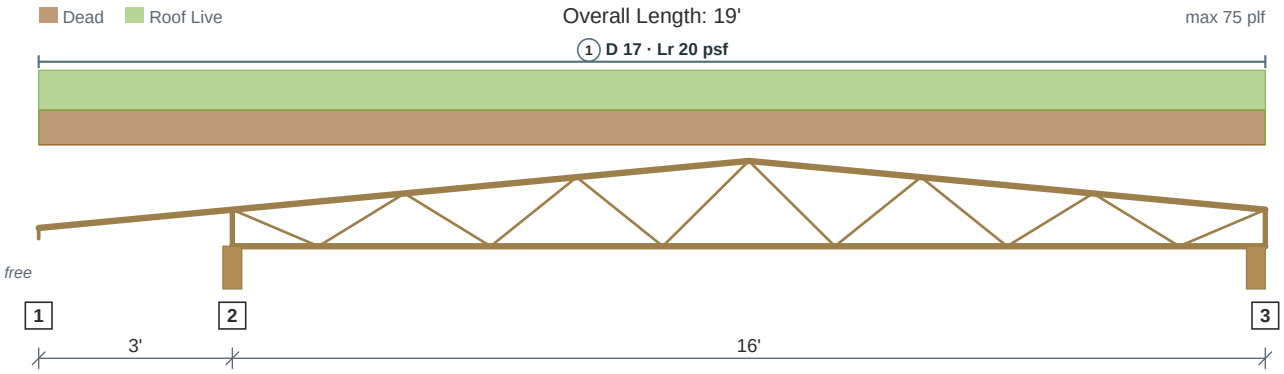

Drawing is conceptual. Locations are measured from the left end of the member; all dimensions are horizontal.

- Generic roof trusses @ 24" o.c., modeled so the loads they carry reach the members and walls that support them as linked loads. The size in the model is a placeholder, so no size or design check is shown; the trusses themselves are designed by the truss manufacturer.

	Loads to Supports (lbs)			
Supports	**Dead**	**Roof Live**	**Total**	**Load goes to**
1 @ 0	--	--	--	free end (cantilever tip)
2 @ 3'	395	451	**847**	Header #3, Footing #1 (a framed wall down to the foundation)
3 @ 19'	271	309	**579**	Header #2, Header #19, Footing - WD-#2, Footing #7 (a framed wall down to the foundation)

Total = the governing ASD combination at that support ("up": the governing uplift, where another combination lifts it); the category columns are service loads.

Vertical Loads	Location	Trib. Width	Dead (0.90)	Roof Live (1.25)	Comments
1 - Uniform (PSF)	0 to 19'	24"	17	20	Typed on the member

Trusses #2

Roof truss (generic) @ 24" o.c.

Level: Roof | Length: 27' | 2018 IRC | 2018 NDS | ASD

LOADS ONLY

Generic member for linked loads
no member size or design check

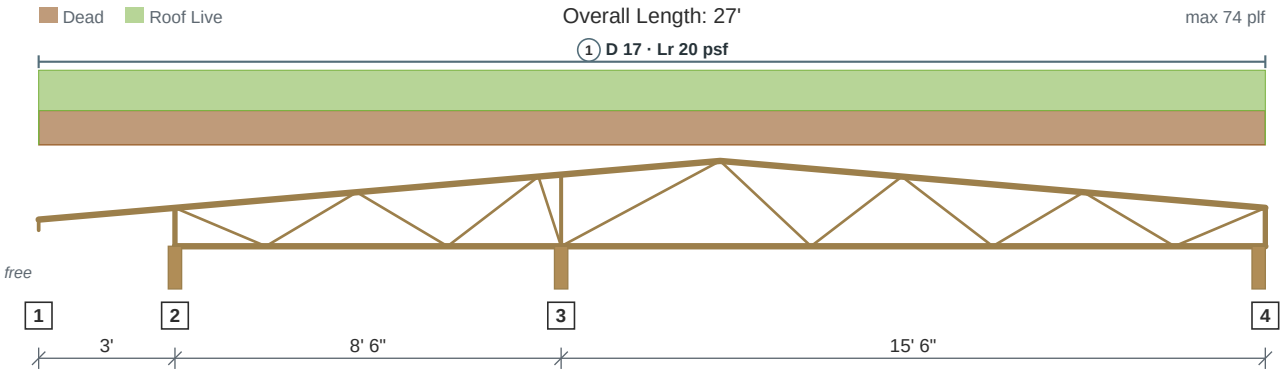

Drawing is conceptual. Locations are measured from the left end of the member; all dimensions are horizontal.

- Generic roof trusses @ 24" o.c., modeled so the loads they carry reach the members and walls that support them as linked loads. The size in the model is a placeholder, so no size or design check is shown; the trusses themselves are designed by the truss manufacturer.

	Loads to Supports (lbs)			
Supports	**Dead**	**Roof Live**	**Total**	**Load goes to**
1 @ 0	--	--	--	free end (cantilever tip)
2 @ 3'	178	209	**387**	Header #5 (bears on top)
3 @ 11' 6"	527	618	**1,144**	Header #4 (bears on top)
4 @ 27'	216	254	**470**	Header #6 (on top or in a hanger? not set -- checked as bearing on top)

Total = the governing ASD combination at that support ("up": the governing uplift, where another combination lifts it); the category columns are service loads.

Vertical Loads	Location	Trib. Width	Dead (0.90)	Roof Live (1.25)	Comments
1 - Uniform (PSF)	0 to 27'	24"	17	20	Typed on the member

Trusses #3

Roof truss (generic) @ 24" o.c.

Level: Roof | Length: 22' | 2018 IRC | 2018 NDS | ASD

LOADS ONLY

Generic member for linked loads
no member size or design check

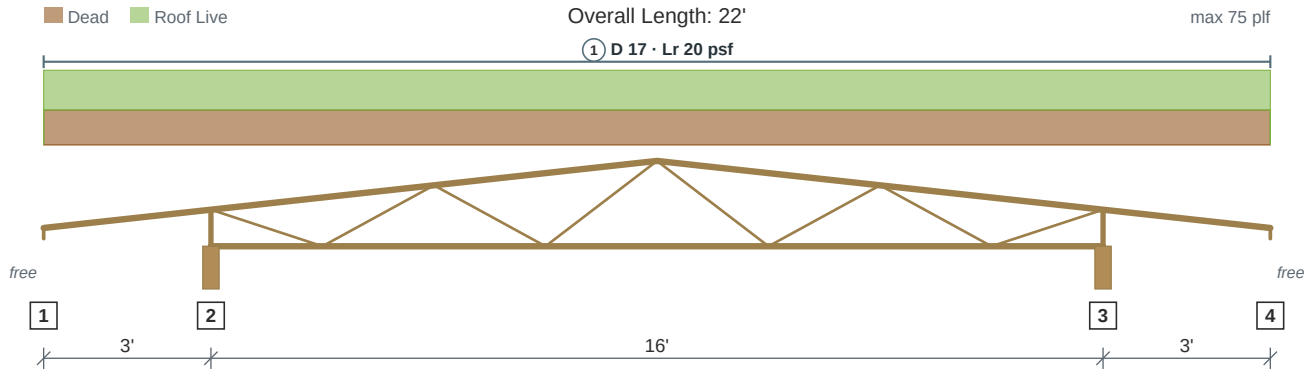

Drawing is conceptual. Locations are measured from the left end of the member; all dimensions are horizontal.

- Generic roof trusses @ 24" o.c., modeled so the loads they carry reach the members and walls that support them as linked loads. The size in the model is a placeholder, so no size or design check is shown; the trusses themselves are designed by the truss manufacturer.

	Loads to Supports (lbs)			
Supports	**Dead**	**Roof Live**	**Total**	**Load goes to**
1 @ 0	--	--	--	free end (cantilever tip)
2 @ 3'	386	440	**826**	Header #7, Beam #10, Footing #6 (a framed wall down to the foundation)
3 @ 19'	386	440	**826**	Header #20, Beam #11 (bears on top)
4 @ 22'	--	--	--	free end (cantilever tip)

Total = the governing ASD combination at that support ("up": the governing uplift, where another combination lifts it); the category columns are service loads.

Vertical Loads	Location	Trib. Width	Dead (0.90)	Roof Live (1.25)	Comments
1 - Uniform (PSF)	0 to 22'	24"	17	20	Typed on the member

Trusses #4

Roof truss (generic) @ 24" o.c.

Level: Roof | Length: 17' | 2018 IRC | 2018 NDS | ASD

LOADS ONLY

Generic member for linked loads
no member size or design check

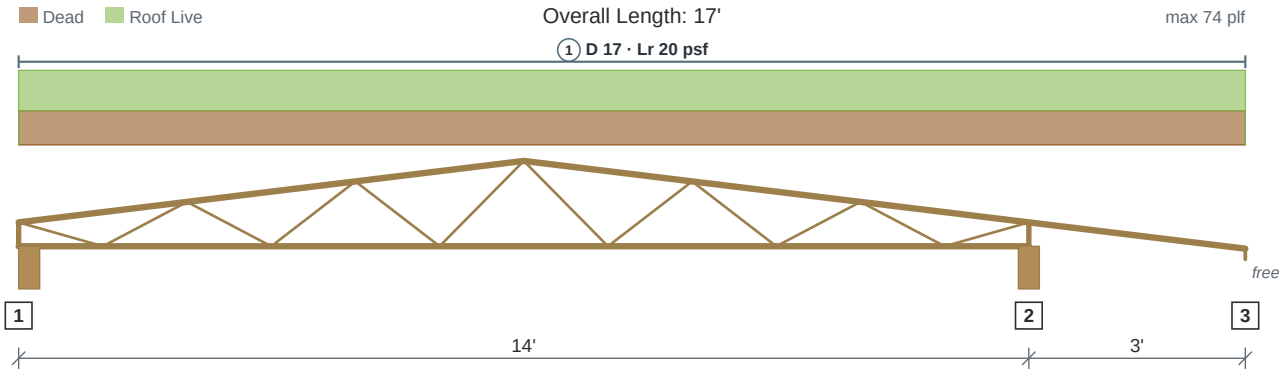

Drawing is conceptual. Locations are measured from the left end of the member; all dimensions are horizontal.

- Generic roof trusses @ 24" o.c., modeled so the loads they carry reach the members and walls that support them as linked loads. The size in the model is a placeholder, so no size or design check is shown; the trusses themselves are designed by the truss manufacturer.

	Loads to Supports (lbs)			
Supports	**Dead**	**Roof Live**	**Total**	**Load goes to**
1 @ 0	227	267	**494**	Header #14, Footing #9 (a framed wall down to the foundation)
2 @ 14'	351	413	**764**	Footing #10 (a framed wall down to the foundation)
3 @ 17'	--	--	--	free end (cantilever tip)

Total = the governing ASD combination at that support ("up": the governing uplift, where another combination lifts it); the category columns are service loads.

Vertical Loads	Location	Trib. Width	Dead (0.90)	Roof Live (1.25)	Comments
1 - Uniform (PSF)	0 to 17'	24"	17	20	Typed on the member

Trusses #5

Roof truss (generic) @ 24" o.c.

Level: Roof | Length: 17' | 2018 IRC | 2018 NDS | ASD

LOADS ONLY

Generic member for linked loads
no member size or design check

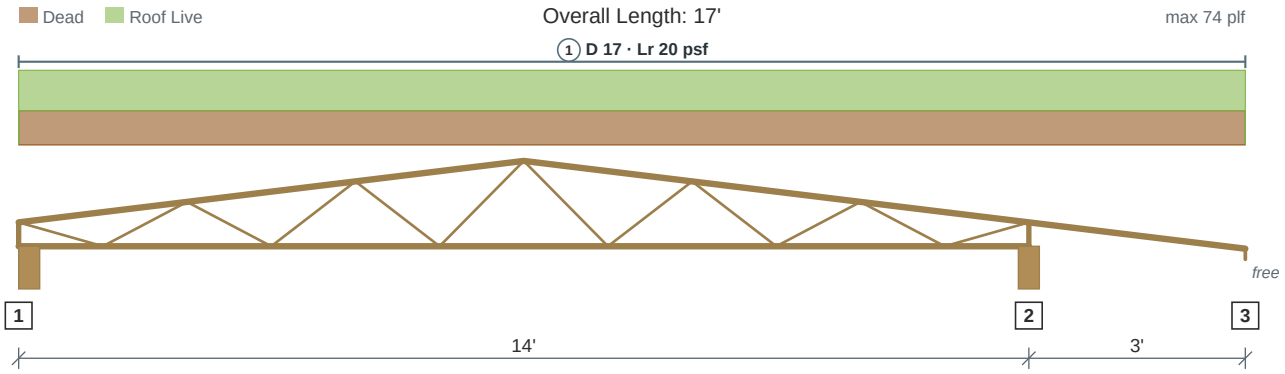

Drawing is conceptual. Locations are measured from the left end of the member; all dimensions are horizontal.

- Generic roof trusses @ 24" o.c., modeled so the loads they carry reach the members and walls that support them as linked loads. The size in the model is a placeholder, so no size or design check is shown; the trusses themselves are designed by the truss manufacturer.

	Loads to Supports (lbs)			
Supports	**Dead**	**Roof Live**	**Total**	**Load goes to**
1 @ 0	227	267	**494**	not linked
2 @ 14'	351	413	**764**	not linked
3 @ 17'	--	--	--	free end (cantilever tip)

Total = the governing ASD combination at that support ("up": the governing uplift, where another combination lifts it); the category columns are service loads.

Vertical Loads	Location	Trib. Width	Dead (0.90)	Roof Live (1.25)	Comments
1 - Uniform (PSF)	0 to 17'	24"	17	20	Typed on the member

Trusses #6

Roof truss (generic) @ 24" o.c.

Level: Roof | Length: 34' | 2018 IRC | 2018 NDS | ASD

LOADS ONLY

Generic member for linked loads
no member size or design check

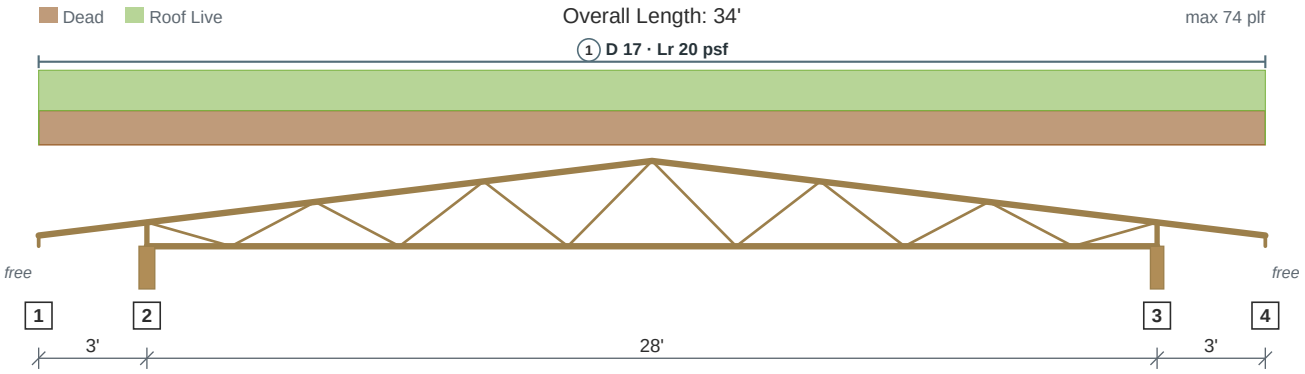

Drawing is conceptual. Locations are measured from the left end of the member; all dimensions are horizontal.

- Generic roof trusses @ 24" o.c., modeled so the loads they carry reach the members and walls that support them as linked loads. The size in the model is a placeholder, so no size or design check is shown; the trusses themselves are designed by the truss manufacturer.

	Loads to Supports (lbs)			
Supports	**Dead**	**Roof Live**	**Total**	**Load goes to**
1 @ 0	--	--	--	free end (cantilever tip)
2 @ 3'	578	680	**1,258**	Header #16, Header #18 (bears on top)
3 @ 31'	578	680	**1,258**	Header #15, Footing #11, Footing #12 (a framed wall down to the foundation)
4 @ 34'	--	--	--	free end (cantilever tip)

Total = the governing ASD combination at that support ("up": the governing uplift, where another combination lifts it); the category columns are service loads.

Vertical Loads	Location	Trib. Width	Dead (0.90)	Roof Live (1.25)	Comments
1 - Uniform (PSF)	0 to 34'	24"	17	20	Typed on the member

Trusses #7

Roof truss (generic) @ 24" o.c.

Level: Roof | Length: 20' | 2018 IRC | 2018 NDS | ASD

LOADS ONLY

Generic member for linked loads
no member size or design check

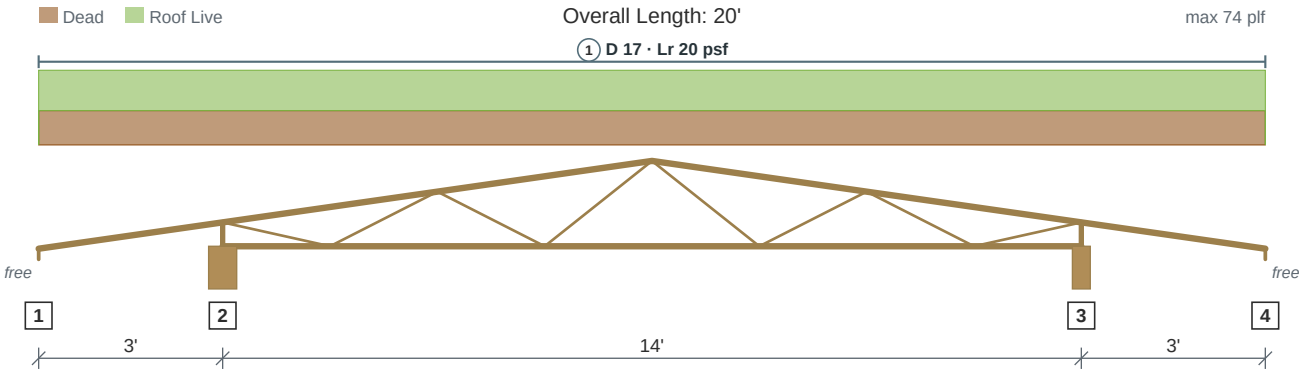

Drawing is conceptual. Locations are measured from the left end of the member; all dimensions are horizontal.

- Generic roof trusses @ 24" o.c., modeled so the loads they carry reach the members and walls that support them as linked loads. The size in the model is a placeholder, so no size or design check is shown; the trusses themselves are designed by the truss manufacturer.

	Loads to Supports (lbs)			
Supports	**Dead**	**Roof Live**	**Total**	**Load goes to**
1 @ 0	--	--	--	free end (cantilever tip)
2 @ 3'	340	400	**740**	Beam #8 (bears on top)
3 @ 17'	340	400	**740**	Bearing wall (marked)
4 @ 20'	--	--	--	free end (cantilever tip)

Total = the governing ASD combination at that support ("up": the governing uplift, where another combination lifts it); the category columns are service loads.

Vertical Loads	Location	Trib. Width	Dead (0.90)	Roof Live (1.25)	Comments
1 - Uniform (PSF)	0 to 20'	24"	17	20	Typed on the member

Trusses #8

Roof truss (generic) @ 24" o.c.

Level: Roof | Length: 17' | 2018 IRC | 2018 NDS | ASD

LOADS ONLY

Generic member for linked loads
no member size or design check

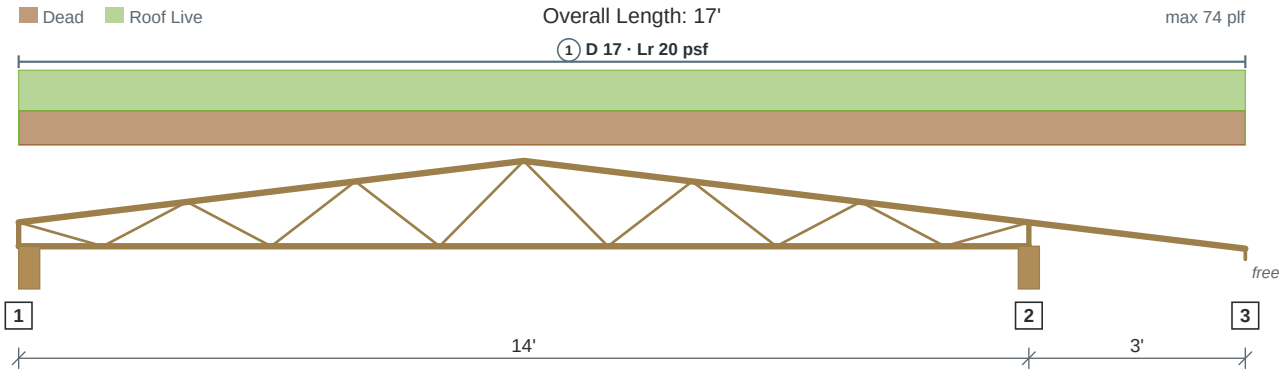

Drawing is conceptual. Locations are measured from the left end of the member; all dimensions are horizontal.

- Generic roof trusses @ 24" o.c., modeled so the loads they carry reach the members and walls that support them as linked loads. The size in the model is a placeholder, so no size or design check is shown; the trusses themselves are designed by the truss manufacturer.

	Loads to Supports (lbs)			
Supports	**Dead**	**Roof Live**	**Total**	**Load goes to**
1 @ 0	227	267	**494**	not linked
2 @ 14'	351	413	**764**	not linked
3 @ 17'	--	--	--	free end (cantilever tip)

Total = the governing ASD combination at that support ("up": the governing uplift, where another combination lifts it); the category columns are service loads.

Vertical Loads	Location	Trib. Width	Dead (0.90)	Roof Live (1.25)	Comments
1 - Uniform (PSF)	0 to 17'	24"	17	20	Typed on the member

Trusses #9

Roof truss (generic) @ 24" o.c.

Level: Roof | Length: 39' | 2018 IRC | 2018 NDS | ASD

LOADS ONLY

Generic member for linked loads
no member size or design check

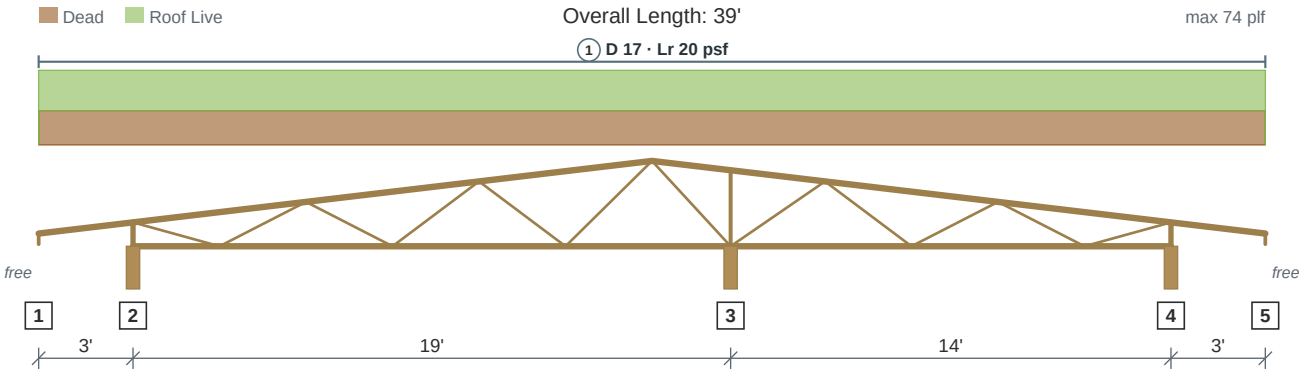

Drawing is conceptual. Locations are measured from the left end of the member; all dimensions are horizontal.

- Generic roof trusses @ 24" o.c., modeled so the loads they carry reach the members and walls that support them as linked loads. The size in the model is a placeholder, so no size or design check is shown; the trusses themselves are designed by the truss manufacturer.

	Loads to Supports (lbs)			
Supports	**Dead**	**Roof Live**	**Total**	**Load goes to**
1 @ 0	--	--	--	free end (cantilever tip)
2 @ 3'	372	438	**810**	Header #2, Header #6, Header #19, Footing - WD-#2, Footing #5 (a framed wall down to the foundation)
3 @ 22'	686	807	**1,493**	Beam #2, Header #25, Footing - WD-#3 (a framed wall down to the foundation)
4 @ 36'	268	315	**583**	Header #12 (bears on top)
5 @ 39'	--	--	--	free end (cantilever tip)

Total = the governing ASD combination at that support ("up": the governing uplift, where another combination lifts it); the category columns are service loads.

Vertical Loads	Location	Trib. Width	Dead (0.90)	Roof Live (1.25)	Comments
1 - Uniform (PSF)	0 to 39'	24"	17	20	Typed on the member

Trusses #10

Roof truss (generic) @ 24" o.c.

Level: Roof | Length: 20' | 2018 IRC | 2018 NDS | ASD

LOADS ONLY

Generic member for linked loads
no member size or design check

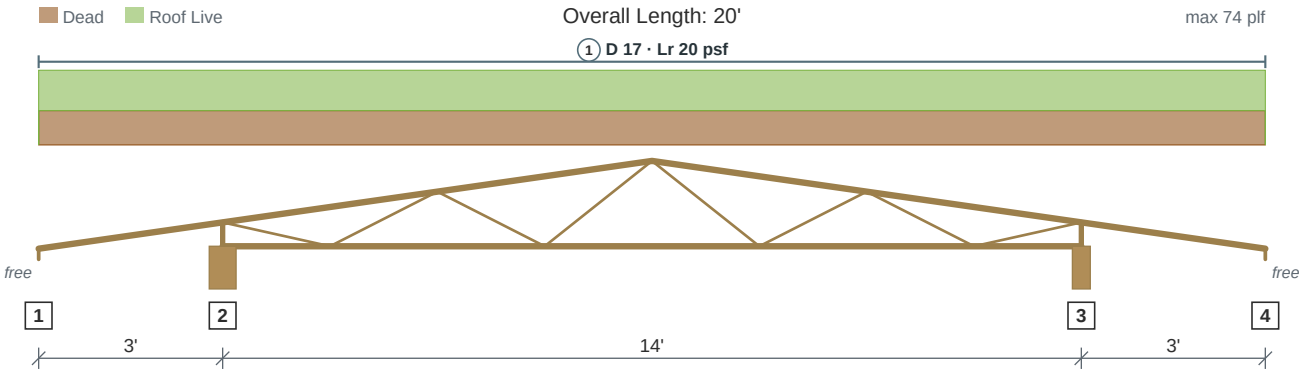

Drawing is conceptual. Locations are measured from the left end of the member; all dimensions are horizontal.

- Generic roof trusses @ 24" o.c., modeled so the loads they carry reach the members and walls that support them as linked loads. The size in the model is a placeholder, so no size or design check is shown; the trusses themselves are designed by the truss manufacturer.

	Loads to Supports (lbs)			
Supports	**Dead**	**Roof Live**	**Total**	**Load goes to**
1 @ 0	--	--	--	free end (cantilever tip)
2 @ 3'	340	400	**740**	Header #21 (bears on top)
3 @ 17'	340	400	**740**	Header #11, Header #24 (bears on top)
4 @ 20'	--	--	--	free end (cantilever tip)

Total = the governing ASD combination at that support ("up": the governing uplift, where another combination lifts it); the category columns are service loads.

Vertical Loads	Location	Trib. Width	Dead (0.90)	Roof Live (1.25)	Comments
1 - Uniform (PSF)	0 to 20'	24"	17	20	Typed on the member

Deck Joists #11

PASSED

(1) 2x8 DF-L(N) No. 2 (1 1/2" x 7 1/4") @ 16" o.c.

Controls: Moment 65% used

Level: Floor - 1st Level | Member type: Joist (Floor Joist) | Length: 26' | 2018 IRC | 2018 NDS | ASD

Section adequacy 35.1% (capacity to spare)

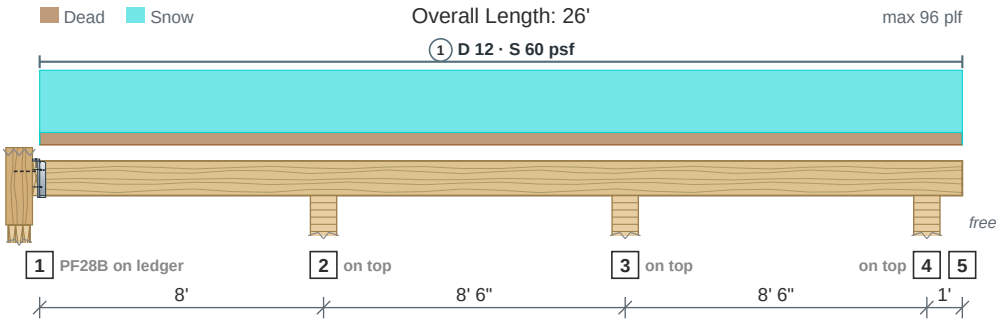

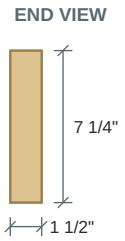

Drawing is conceptual. Locations are measured from the left end of the member; all dimensions are horizontal.

Design Results	Actual @ Location	Allowed	Result	LDF	Load Combination
Member Reaction (lbs)	312 @ 0	1,172 (1 1/4")	Passed (27% used)	--	
Shear (lbs)	414 @ 17' 4"	1,501	Passed (28% used)	1.15	D+S
Neg Moment (Ft-lbs)	-713 @ 16' 6"	1,099	Passed (65% used)	1.15	D+S
Live Load Defl. (in)	0.025 @ 26'	0.1	Passed (2L/959)	--	S
Total Load Defl. (in)	0.031 @ 26'	0.1	Passed (2L/779)	--	D+S

- Deflection criteria: roof live or snow alone L/240 (IRC Table R301.7); dead plus live L/240 (this member's own limit).
- Overhang deflection criteria: LL (2L/240) and TL (2L/240) -- a cantilever is limited on twice its length.
- Bending adjustment factors: CD = 1.15, CF = 1.20, Cr = 1.15, CL = 0.744 (D+S).
- Beam stability (NDS 3.3.3) governs bending: negative moment 713 lbf-ft, 8.00-16.50 ft, CL 0.744 (unbraced 8.5 ft).
- Member self weight of 2.5 plf is included.
- Calculations per NDS 2018, ASD, every load combination with its own load duration factor.

	Bearing Length		Loads to Supports (lbs)			
Supports	**Provided**	**Required**	**Dead**	**Snow**	**Total**	**Load goes to**
1 @ 0	1 1/4" seat	5/16"	59	253	**312**	Header #22 (hung on the 2x8 HF No. 2 ledger (not set: assumed) on a stud wall standing on it, in a PF28B top flange, 71%)
2 @ 8'	5 1/2"	9/16"	167	721	**888**	Beam #13 (bears on top)
3 @ 16' 6"	5 1/2"	5/8"	173	749	**922**	Beam #14 (bears on top)
4 @ 25'	5 1/2"	1/16"	82	357	**439**	Beam #15 (bears on top)
5 @ 26'	--	--	--	--	--	free end (cantilever tip)

Total = the governing ASD combination at that support ("up": the governing uplift, where another combination lifts it); the category columns are service loads.
Ledger at support 1 (LEDGER Deck Joists #11-1): the 2x8 HF No. 2 ledger (not set: assumed) on 2x6 DF-L studs at 16 in., 1/2" sheathing between, wet service: (3) 1/2 x 4-1/2 lags at each stud (16 in. o.c.), from 2" below the ledger's top; 10% to spare at D+S (NDS 12.3, across the gap per AWC TR12; 11.3, C_M 0.7). IRC Table R507.9.1.3(1): 23 in. at a 6'1" to 8' joist span -- not this deck: the table is for a 2x solid-sawn band joist; its loads (dead 12 psf, snow 60 psf) are past the table's 40 psf live, 10 psf dead, 40 psf snow. Not checked here: The deck's lateral load connection (IRC R507.9.2: hold-downs at the ledger).

Lateral Bracing	Bracing Intervals	Comments
Top Edge (Lu)	continuous	braced by the sheathing
Bottom Edge (Lu)	8' 6" o/c	governs C_L here: the bottom edge is in compression

Vertical Loads	Location	Trib. Width	Dead (0.90)	Snow (1.15)	Comments
0 - Self Weight (PLF)	0 to 26'	N/A	2.5	--	
1 - Uniform (PSF)	0 to 26'	16"	12	60	Typed on the member

Shear, Moment and Deflection

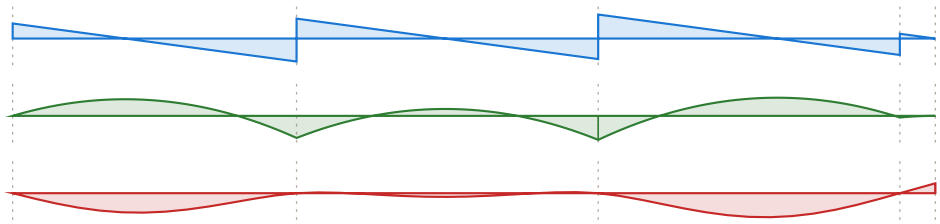

Shear (lbs)
D+S
max 497 @ 16' 6"

Moment (ft-lbs)
D+S
max -713 @ 16' 6"

Deflection (in)
D+S
0.031 in up @ 26'
limit 0.1 in on 2L (cantilever)

Deck Joists #12

PASSED

(1) 2x8 DF-L(N) No. 2 (1 1/2" x 7 1/4") @ 16" o.c.

Controls: Moment 59% used

Level: Floor - 1st Level | Member type: Joist (Floor Joist) | Length: 9' 6" | 2018 IRC | 2018 NDS | ASD

Section adequacy 41.5% (capacity to spare)

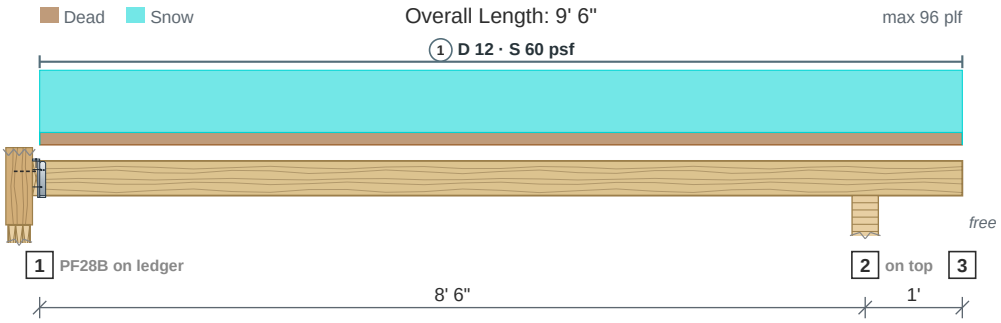

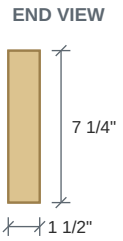

Drawing is conceptual. Locations are measured from the left end of the member; all dimensions are horizontal.

Design Results	Actual @ Location	Allowed	Result	LDF	Load Combination
Member Reaction (lbs)	413 @ 0	1,172 (1 1/4")	Passed (35% used)	--	
Shear (lbs)	413 @ 0	1,501	Passed (27% used)	1.15	D+S
Moment (Ft-lbs)	865 @ 4' 2 3/16"	1,477	Passed (59% used)	1.15	D+S
Live Load Defl. (in)	0.044 @ 9' 6"	0.1	Passed (2L/550)	--	S
Total Load Defl. (in)	0.054 @ 9' 6"	0.1	Passed (2L/447)	--	D+S

- Deflection criteria: roof live or snow alone L/240 (IRC Table R301.7); dead plus live L/240 (this member's own limit).
- Overhang deflection criteria: LL (2L/240) and TL (2L/240) -- a cantilever is limited on twice its length.
- Bending adjustment factors: CD = 1.15, CF = 1.20, Cr = 1.15, CL = 1.00 (D+S).
- Beam stability: each moment checked against the bracing of its compression edge (CL = 1.00 where braced).
- Member self weight of 2.5 plf is included.
- Calculations per NDS 2018, ASD, every load combination with its own load duration factor.

	Bearing Length		Loads to Supports (lbs)			
Supports	**Provided**	**Required**	**Dead**	**Snow**	**Total**	**Load goes to**
1 @ 0	1 1/4" seat	7/16"	77	335	**413**	Header #23 (hung on the 2x8 SP No. 2 ledger on a stud wall standing on it, in a PF28B top flange, 69%)
2 @ 8' 6"	5 1/2"	3/16"	98	425	**523**	Beam #16 (bears on top)
3 @ 9' 6"	--	--	--	--	--	free end (cantilever tip)

Total = the governing ASD combination at that support ("up": the governing uplift, where another combination lifts it); the category columns are service loads.
Ledger at support 1 (LEDGER Deck Joists #12-1): the 2x8 SP No. 2 ledger on 2x6 DF-L studs at 16 in., 1/2" sheathing between, wet service: (3) 1/2 x 4-1/2 lags at each stud (16 in. o.c.), from 2" below the ledger's top; 4% to spare at D+S (NDS 12.3, across the gap per AWC TR12; 11.3, C_M 0.7). IRC Table R507.9.1.3(1): 18 in. at a 8'1" to 10' joist span -- not this deck: the table is for a 2x solid-sawn band joist; its loads (dead 12 psf, snow 60 psf) are past the table's 40 psf live, 10 psf dead, 40 psf snow. Not checked here: The deck's lateral load connection (IRC R507.9.2: hold-downs at the ledger).

Lateral Bracing	Bracing Intervals	Comments
Top Edge (Lu)	continuous	braced by the sheathing
Bottom Edge (Lu)	8' 6" o/c	used for C_L only where the bottom edge is in compression

Vertical Loads	Location	Trib. Width	Dead (0.90)	Snow (1.15)	Comments
0 - Self Weight (PLF)	0 to 9' 6"	N/A	2.5	--	
1 - Uniform (PSF)	0 to 9' 6"	16"	12	60	Typed on the member

Shear, Moment and Deflection

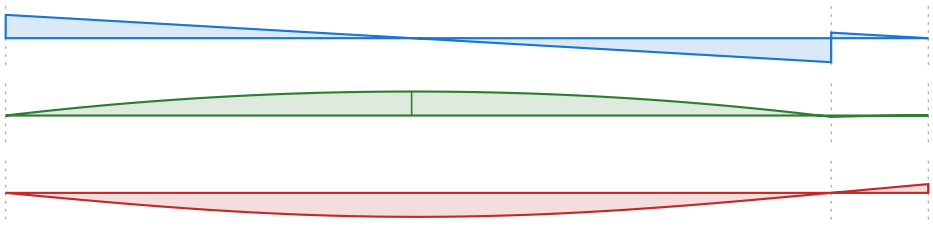

Shear (lbs)
D+S
max -424 @ 8' 6"

Moment (ft-lbs)
D+S
max 865 @ 4' 2 3/16"

Deflection (in)
D+S
0.054 in up @ 9' 6"
limit 0.1 in on 2L (cantilever)

Deck Joists #13

PASSED

(1) 2x8 DF-L(N) No. 2 (1 1/2" x 7 1/4") @ 16" o.c.

Controls: Moment 59% used

Level: Floor - 1st Level | Member type: Joist (Floor Joist) | Length: 9' 6" | 2018 IRC | 2018 NDS | ASD

Section adequacy 41.5% (capacity to spare)

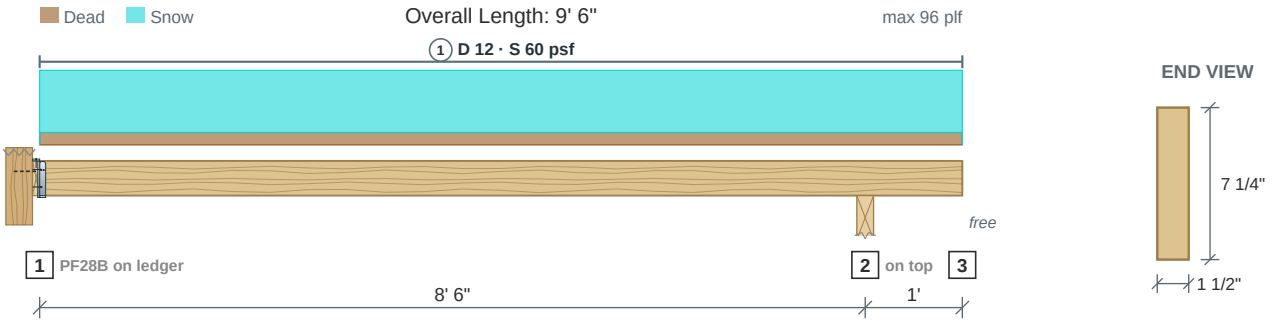

Drawing is conceptual. Locations are measured from the left end of the member; all dimensions are horizontal.

Design Results	Actual @ Location	Allowed	Result	LDF	Load Combination
Member Reaction (lbs)	413 @ 0	1,172 (1 1/4")	Passed (35% used)	--	
Shear (lbs)	413 @ 0	1,501	Passed (27% used)	1.15	D+S
Moment (Ft-lbs)	865 @ 4' 2 3/16"	1,477	Passed (59% used)	1.15	D+S
Live Load Defl. (in)	0.044 @ 9' 6"	0.1	Passed (2L/550)	--	S
Total Load Defl. (in)	0.054 @ 9' 6"	0.1	Passed (2L/447)	--	D+S

- Deflection criteria: roof live or snow alone L/240 (IRC Table R301.7); dead plus live L/240 (this member's own limit).
- Overhang deflection criteria: LL (2L/240) and TL (2L/240) -- a cantilever is limited on twice its length.
- Bending adjustment factors: CD = 1.15, CF = 1.20, Cr = 1.15, CL = 1.00 (D+S).
- Beam stability: each moment checked against the bracing of its compression edge (CL = 1.00 where braced).
- Member self weight of 2.5 plf is included.
- Calculations per NDS 2018, ASD, every load combination with its own load duration factor.

	Bearing Length		Loads to Supports (lbs)			
Supports	**Provided**	**Required**	**Dead**	**Snow**	**Total**	**Load goes to**
1 @ 0	1 1/4" seat	7/16"	77	335	**413**	not linked (hung on the 2x8 SP No. 2 ledger, in a PF28B top flange, 69%)
2 @ 8' 6"	3 1/2"	3/16"	98	425	**523**	Beam #17, Beam #18 (bears on top)
3 @ 9' 6"	--	--	--	--	--	free end (cantilever tip)

Total = the governing ASD combination at that support ("up": the governing uplift, where another combination lifts it); the category columns are service loads.
Ledger at support 1 (LEDGER Deck Joists #13-1): the 2x8 SP No. 2 ledger on a 2x SPF rim board (not set: assumed), 1/2" sheathing between, wet service: 5/8 through-bolts, 2 rows staggered @ 11 in. o.c., 2 1/2" and 4 3/4" below the ledger's top, 2 1/2" from its ends; 6% to spare at D+S (NDS 12.3, across the gap per AWC TR12; 11.3, C_M 0.7). IRC Table R507.9.1.3(1): 34 in. at a 8'1" to 10' joist span -- not this deck: the table is for 1/2 in. lags and bolts; its loads (dead 12 psf, snow 60 psf) are past the table's 40 psf live, 10 psf dead, 40 psf snow. Not checked here: The deck's lateral load connection (IRC R507.9.2: hold-downs at the ledger).

Lateral Bracing	Bracing Intervals	Comments
Top Edge (Lu)	continuous	braced by the sheathing
Bottom Edge (Lu)	8' 6" o/c	used for C_L only where the bottom edge is in compression

Vertical Loads	Location	Trib. Width	Dead (0.90)	Snow (1.15)	Comments
0 - Self Weight (PLF)	0 to 9' 6"	N/A	2.5	--	
1 - Uniform (PSF)	0 to 9' 6"	16"	12	60	Typed on the member

Shear, Moment and Deflection

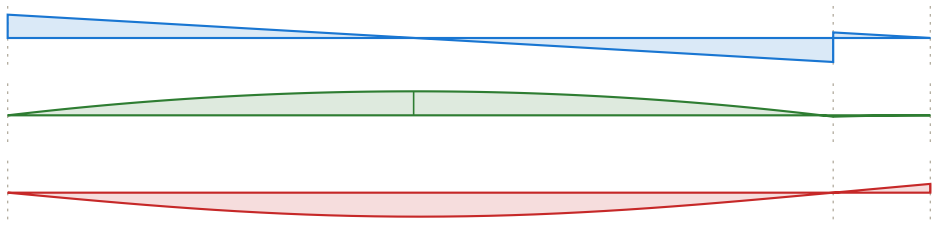

Shear (lbs)
D+S
max -424 @ 8' 6"

Moment (ft-lbs)
D+S
max 865 @ 4' 2 3/16"

Deflection (in)
D+S
0.054 in up @ 9' 6"
limit 0.1 in on 2L (cantilever)

Joists #1

(1) 18" Weyerhaeuser TJI 360 @ 24" o.c.

Level: Floor - 1st Level | Member type: Joist (Floor Joist) | Length: 16' | 2018 IRC | 2018 NDS | ASD

PASSED

Controls: Bearing 57% used
Section adequacy 42.8% (capacity to spare)

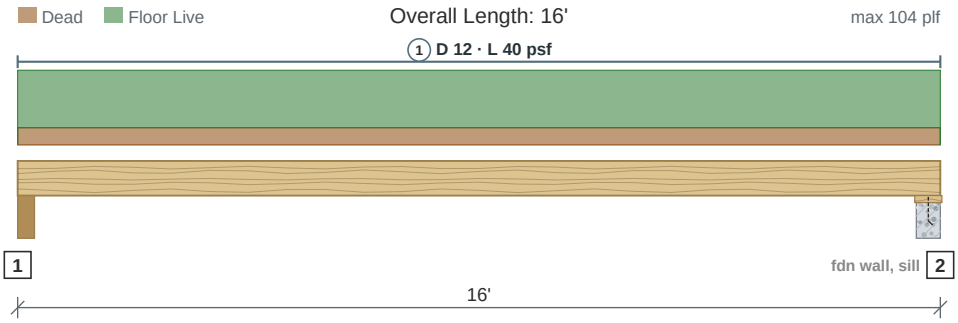

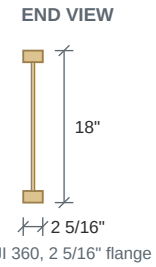

Drawing is conceptual. Locations are measured from the left end of the member; all dimensions are horizontal.

Design Results	Actual @ Location	Allowed	Result	LDF	Load Combination
Member Reaction (lbs)	862 @ 0	1,505 (3 1/2")	Passed (57% used)	--	D+L
Shear (lbs)	862 @ 0	2,425	Passed (36% used)	1.00	D+L
Moment (Ft-lbs)	3,446 @ 8'	9,465	Passed (36% used)	1.00	D+L
Live Load Defl. (in)	0.139 @ 8'	0.533	Passed (L/1,381)	--	L
Total Load Defl. (in)	0.187 @ 8'	0.8	Passed (L/1,026)	--	D+L

- Deflection criteria: floor live alone L/360 (IRC Table R301.7); dead plus live L/240 (this member's own limit).
- Member self weight of 3.7 plf is included.
- Calculations per NDS 2018 and Weyerhaeuser TJ-4000 / ICC-ES ESR-1153, ASD, every load combination with its own load duration factor.

	Bearing Length		Loads to Supports (lbs)			
Supports	**Provided**	**Required**	**Dead**	**Floor Live**	**Total**	**Load goes to**
1 @ 0	3 1/2"	--	222	640	**862**	not linked
2 @ 16'	3 1/2"	--	222	640	**862**	Footing #7 (on the foundation wall, on its mud sill)

Total = the governing ASD combination at that support ("up": the governing uplift, where another combination lifts it); the category columns are service loads.

Lateral Bracing	Bracing Intervals	Comments
Top Flange (Lu)	continuous	braced by the sheathing
Bottom Flange (Lu)	16' o/c	bracing per the manufacturer's details

Vertical Loads	Location	Trib. Width	Dead (0.90)	Floor Live (1.00)	Comments
0 - Self Weight (PLF)	0 to 16'	N/A	3.7	--	
1 - Uniform (PSF)	0 to 16'	24"	12	40	Typed on the member

Shear, Moment and Deflection

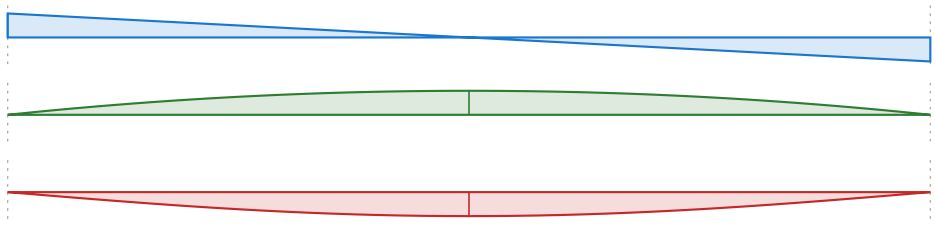

Shear (lbs)
D+L
max 862 @ 0

Moment (ft-lbs)
D+L
max 3,446 @ 8'

Deflection (in)
D+L
0.187 in down @ 8' (shear incl.)
limit 0.8 in on the span

Joists #2

PASSED

(1) 18" Weyerhaeuser TJI 360 @ 24" o.c.

Controls: Bearing 50% used

Level: Floor - 1st Level | Member type: Joist (Floor Joist) | Length: 14' | 2018 IRC | 2018 NDS | ASD

Section adequacy 49.9% (capacity to spare)

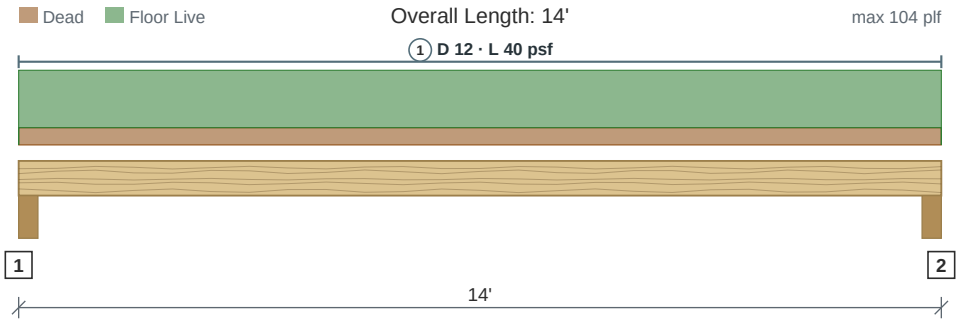

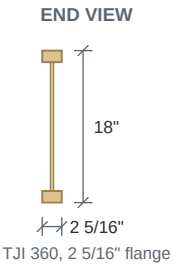

Drawing is conceptual. Locations are measured from the left end of the member; all dimensions are horizontal.

Design Results	Actual @ Location	Allowed	Result	LDF	Load Combination
Member Reaction (lbs)	754 @ 0	1,505 (3 1/2")	Passed (50% used)	--	D+L
Shear (lbs)	754 @ 0	2,425	Passed (31% used)	1.00	D+L
Moment (Ft-lbs)	2,639 @ 7'	9,465	Passed (28% used)	1.00	D+L
Live Load Defl. (in)	0.087 @ 7'	0.467	Passed (L/1,932)	--	L
Total Load Defl. (in)	0.117 @ 7'	0.7	Passed (L/1,435)	--	D+L

- Deflection criteria: floor live alone L/360 (IRC Table R301.7); dead plus live L/240 (this member's own limit).
- Member self weight of 3.7 plf is included.
- Calculations per NDS 2018 and Weyerhaeuser TJ-4000 / ICC-ES ESR-1153, ASD, every load combination with its own load duration factor.

	Bearing Length		Loads to Supports (lbs)			
Supports	**Provided**	**Required**	**Dead**	**Floor Live**	**Total**	**Load goes to**
1 @ 0	3 1/2"	--	194	560	**754**	not linked
2 @ 14'	3 1/2"	--	194	560	**754**	not linked

Total = the governing ASD combination at that support ("up": the governing uplift, where another combination lifts it); the category columns are service loads.

Lateral Bracing	Bracing Intervals	Comments
Top Flange (Lu)	continuous	braced by the sheathing
Bottom Flange (Lu)	14' o/c	bracing per the manufacturer's details

Vertical Loads	Location	Trib. Width	Dead (0.90)	Floor Live (1.00)	Comments
0 - Self Weight (PLF)	0 to 14'	N/A	3.7	--	
1 - Uniform (PSF)	0 to 14'	24"	12	40	Typed on the member

Shear, Moment and Deflection

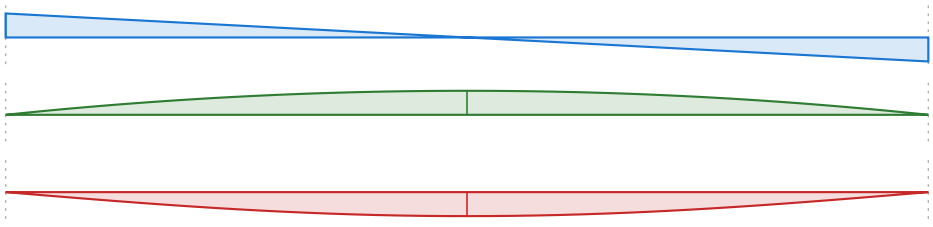

Shear (lbs)
D+L
max 754 @ 0

Moment (ft-lbs)
D+L
max 2,639 @ 7'

Deflection (in)
D+L
0.117 in down @ 7' (shear incl.)
limit 0.7 in on the span

Joists #3

PASSED

(1) 18" Weyerhaeuser TJI 360 @ 24" o.c.

Level: Floor - 1st Level | Member type: Joist (Floor Joist) | Length: 49' | 2018 IRC | 2018 NDS | ASD

Controls: Bearing 86% used
Section adequacy 13.7% (capacity to spare)

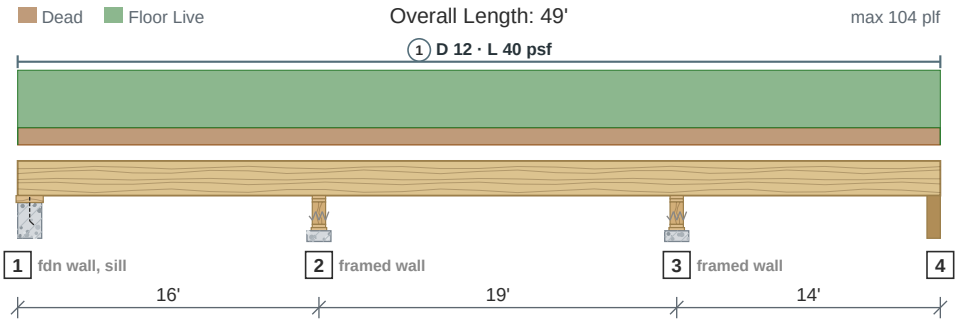

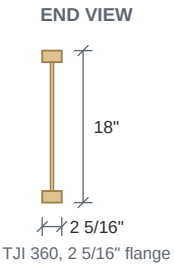

Drawing is conceptual. Locations are measured from the left end of the member; all dimensions are horizontal.

Design Results	Actual @ Location	Allowed	Result	LDF	Load Combination
Member Reaction (lbs)	2,124 @ 16'	2,460 (3 1/2")	Passed (86% used)	--	D+L
Shear (lbs)	1,075 @ 16'	2,425	Passed (44% used)	1.00	D+L
Moment (Ft-lbs)	3,418 @ 6' 1 1/2"	9,465	Passed (36% used)	1.00	D+L
Live Load Defl. (in)	0.076 @ 6' 10 5/16"	0.533	Passed (L/2,533)	--	L
Total Load Defl. (in)	0.102 @ 6' 10 5/16"	0.8	Passed (L/1,881)	--	D+L

- Deflection criteria: floor live alone L/360 (IRC Table R301.7); dead plus live L/240 (this member's own limit).
- Member self weight of 3.7 plf is included.
- Calculations per NDS 2018 and Weyerhaeuser TJ-4000 / ICC-ES ESR-1153, ASD, every load combination with its own load duration factor.

	Bearing Length		Loads to Supports (lbs)			
Supports	**Provided**	**Required**	**Dead**	**Floor Live**	**Total**	**Load goes to**
1 @ 0	3 1/2"	--	167	481	**648**	Footing #1, Footing #5 (on the foundation wall, on its mud sill)
2 @ 16'	3 1/2"	--	546	1,578	**2,124**	Header #19, Footing - WD-#2 (a framed wall down to the foundation)
3 @ 35'	3 1/2"	--	504	1,457	**1,961**	not linked (framed wall)
4 @ 49'	3"	--	140	404	**544**	not linked

Total = the governing ASD combination at that support ("up": the governing uplift, where another combination lifts it); the category columns are service loads.

Lateral Bracing	Bracing Intervals	Comments
Top Flange (Lu)	continuous	braced by the sheathing
Bottom Flange (Lu)	19' o/c	bracing per the manufacturer's details

Vertical Loads	Location	Trib. Width	Dead (0.90)	Floor Live (1.00)	Comments
0 - Self Weight (PLF)	0 to 49'	N/A	3.7	--	
1 - Uniform (PSF)	0 to 49'	24"	12	40	Typed on the member

Shear, Moment and Deflection

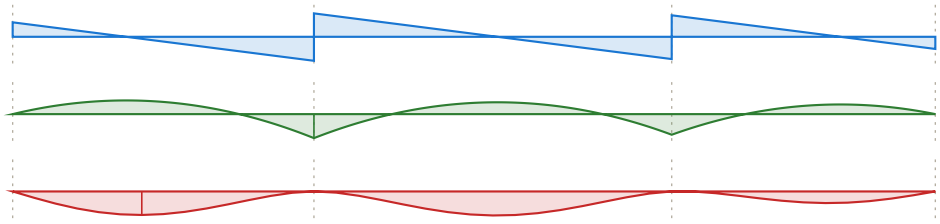

Shear (lbs)
D+L
max -1,075 @ 16'

Moment (ft-lbs)
D+L
max -3,417 @ 16'

Deflection (in)
D+L
0.102 in down @ 6' 10 5/16" (shear incl.)
limit 0.8 in on the span

Joists #4

PASSED

(1) 18" Weyerhaeuser TJI 360 @ 24" o.c.

Controls: Bearing 41% used

Level: Floor - 1st Level | Member type: Joist (Floor Joist) | Length: 11' 6" | 2018 IRC | 2018 NDS | ASD

Section adequacy 58.9% (capacity to spare)

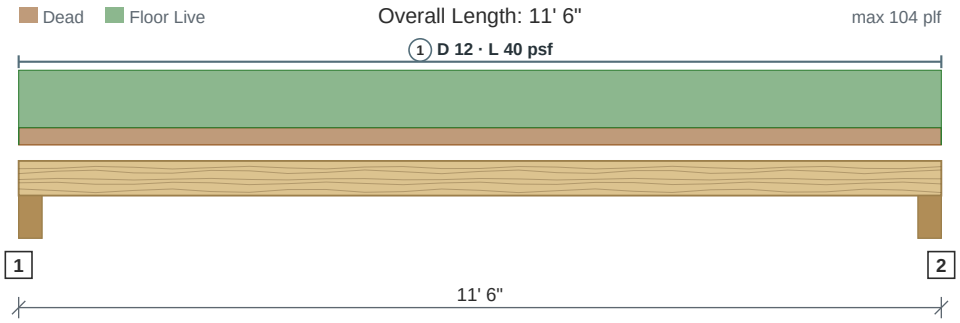

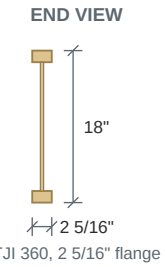

Drawing is conceptual. Locations are measured from the left end of the member; all dimensions are horizontal.

Design Results	Actual @ Location	Allowed	Result	LDF	Load Combination
Member Reaction (lbs)	619 @ 0	1,505 (3 1/2")	Passed (41% used)	--	D+L
Shear (lbs)	619 @ 0	2,425	Passed (26% used)	1.00	D+L
Moment (Ft-lbs)	1,780 @ 5' 9"	9,465	Passed (19% used)	1.00	D+L
Live Load Defl. (in)	0.045 @ 5' 9"	0.383	Passed (L/3,088)	--	L
Total Load Defl. (in)	0.06 @ 5' 9"	0.575	Passed (L/2,294)	--	D+L

- Deflection criteria: floor live alone L/360 (IRC Table R301.7); dead plus live L/240 (this member's own limit).
- Member self weight of 3.7 plf is included.
- Calculations per NDS 2018 and Weyerhaeuser TJ-4000 / ICC-ES ESR-1153, ASD, every load combination with its own load duration factor.

	Bearing Length		Loads to Supports (lbs)			
Supports	**Provided**	**Required**	**Dead**	**Floor Live**	**Total**	**Load goes to**
1 @ 0	3 1/2"	--	159	460	**619**	not linked
2 @ 11' 6"	3 1/2"	--	159	460	**619**	not linked

Total = the governing ASD combination at that support ("up": the governing uplift, where another combination lifts it); the category columns are service loads.

Lateral Bracing	Bracing Intervals	Comments
Top Flange (Lu)	continuous	braced by the sheathing
Bottom Flange (Lu)	11' 6" o/c	bracing per the manufacturer's details

Vertical Loads	Location	Trib. Width	Dead (0.90)	Floor Live (1.00)	Comments
0 - Self Weight (PLF)	0 to 11' 6"	N/A	3.7	--	
1 - Uniform (PSF)	0 to 11' 6"	24"	12	40	Typed on the member

Shear, Moment and Deflection

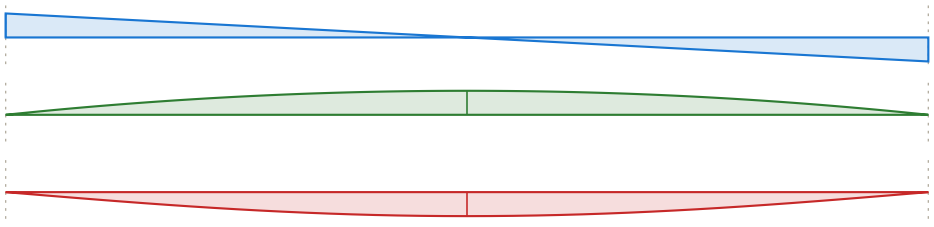

Shear (lbs)
D+L
max 619 @ 0

Moment (ft-lbs)
D+L
max 1,780 @ 5' 9"

Deflection (in)
D+L
0.06 in down @ 5' 9" (shear incl.)
limit 0.575 in on the span

Joists #5

(1) 18" Weyerhaeuser TJI 360 @ 24" o.c.

Level: Floor - 1st Level | Member type: Joist (Floor Joist) | Length: 33' | 2018 IRC | 2018 NDS | ASD

PASSED

Controls: Bearing 92% used
Section adequacy 8% (capacity to spare)

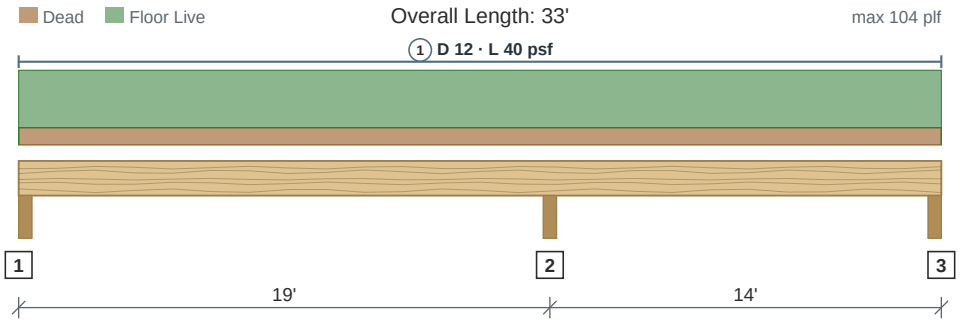

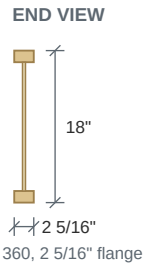

Drawing is conceptual. Locations are measured from the left end of the member; all dimensions are horizontal.

Design Results	Actual @ Location	Allowed	Result	LDF	Load Combination
Member Reaction (lbs)	2,263 @ 19'	2,460 (3 1/2")	Passed (92% used)	--	D+L
Shear (lbs)	1,229 @ 19'	2,425	Passed (51% used)	1.00	D+L
Moment (Ft-lbs)	3,918 @ 7' 7 1/16"	9,465	Passed (41% used)	1.00	D+L
Live Load Defl. (in)	0.148 @ 8' 8 1/2"	0.633	Passed (L/1,541)	--	L
Total Load Defl. (in)	0.199 @ 8' 8 1/2"	0.95	Passed (L/1,145)	--	D+L

- Deflection criteria: floor live alone L/360 (IRC Table R301.7); dead plus live L/240 (this member's own limit).
- Member self weight of 3.7 plf is included.
- Calculations per NDS 2018 and Weyerhaeuser TJ-4000 / ICC-ES ESR-1153, ASD, every load combination with its own load duration factor.

	Bearing Length		Loads to Supports (lbs)			
Supports	Provided	Required	Dead	Floor Live	Total	Load goes to
1 @ 0	3 1/2"	--	210	607	**817**	not linked
2 @ 19'	3 1/2"	--	582	1,681	**2,263**	not linked
3 @ 33'	3"	--	122	352	**474**	not linked

Total = the governing ASD combination at that support ("up": the governing uplift, where another combination lifts it); the category columns are service loads.

Lateral Bracing	Bracing Intervals	Comments
Top Flange (Lu)	continuous	braced by the sheathing
Bottom Flange (Lu)	19' o/c	bracing per the manufacturer's details

Vertical Loads	Location	Trib. Width	Dead (0.90)	Floor Live (1.00)	Comments
0 - Self Weight (PLF)	0 to 33'	N/A	3.7	--	
1 - Uniform (PSF)	0 to 33'	24"	12	40	Typed on the member

Shear, Moment and Deflection

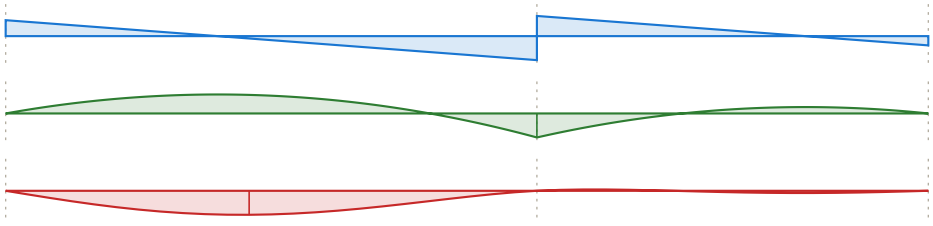

Shear (lbs)
D+L
max -1,229 @ 19'

Moment (ft-lbs)
D+L
max -3,918 @ 19'

Deflection (in)
D+L
0.199 in down @ 8' 8 1/2" (shear incl.)
limit 0.95 in on the span

Joists #6

PASSED

(1) 18" Weyerhaeuser TJI 360 @ 24" o.c.

Controls: Bearing 86% used

Level: Floor - 1st Level | Member type: Joist (Floor Joist) | Length: 49' | 2018 IRC | 2018 NDS | ASD

Section adequacy 13.7% (capacity to spare)

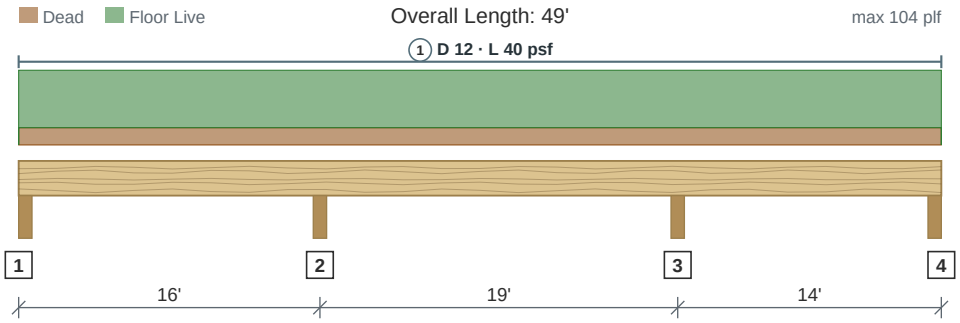

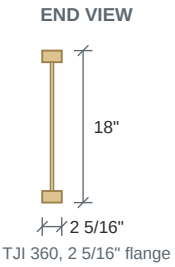

Drawing is conceptual. Locations are measured from the left end of the member; all dimensions are horizontal.

Design Results	Actual @ Location	Allowed	Result	LDF	Load Combination
Member Reaction (lbs)	2,124 @ 16'	2,460 (3 1/2")	Passed (86% used)	--	D+L
Shear (lbs)	1,075 @ 16'	2,425	Passed (44% used)	1.00	D+L
Moment (Ft-lbs)	3,418 @ 6' 1 1/2"	9,465	Passed (36% used)	1.00	D+L
Live Load Defl. (in)	0.076 @ 6' 10 5/16"	0.533	Passed (L/2,533)	--	L
Total Load Defl. (in)	0.102 @ 6' 10 5/16"	0.8	Passed (L/1,881)	--	D+L

- Deflection criteria: floor live alone L/360 (IRC Table R301.7); dead plus live L/240 (this member's own limit).
- Member self weight of 3.7 plf is included.
- Calculations per NDS 2018 and Weyerhaeuser TJ-4000 / ICC-ES ESR-1153, ASD, every load combination with its own load duration factor.

	Bearing Length		Loads to Supports (lbs)			
Supports	**Provided**	**Required**	**Dead**	**Floor Live**	**Total**	**Load goes to**
1 @ 0	3 1/2"	--	167	481	**648**	not linked
2 @ 16'	3 1/2"	--	546	1,578	**2,124**	not linked
3 @ 35'	3 1/2"	--	504	1,457	**1,961**	not linked
4 @ 49'	3"	--	140	404	**544**	not linked

Total = the governing ASD combination at that support ("up": the governing uplift, where another combination lifts it); the category columns are service loads.

Lateral Bracing	Bracing Intervals	Comments
Top Flange (Lu)	continuous	braced by the sheathing
Bottom Flange (Lu)	19' o/c	bracing per the manufacturer's details

Vertical Loads	Location	Trib. Width	Dead (0.90)	Floor Live (1.00)	Comments
0 - Self Weight (PLF)	0 to 49'	N/A	3.7	--	
1 - Uniform (PSF)	0 to 49'	24"	12	40	Typed on the member

Shear, Moment and Deflection

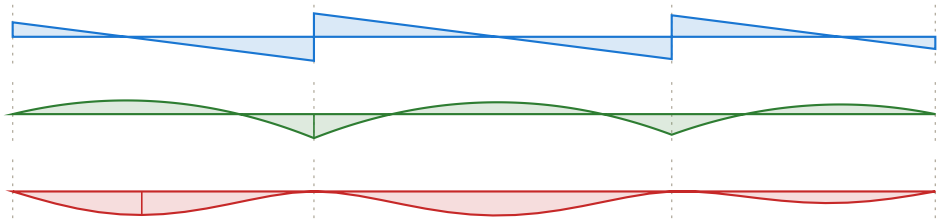

Shear (lbs)
D+L
max -1,075 @ 16'

Moment (ft-lbs)
D+L
max -3,417 @ 16'

Deflection (in)
D+L
0.102 in down @ 6' 10 5/16" (shear incl.)
limit 0.8 in on the span

Joists #7

PASSED

(1) 18" Weyerhaeuser TJI 360 @ 24" o.c.

Controls: Bearing 81% used

Level: Floor - 1st Level | Member type: Joist (Floor Joist) | Length: 57' | 2018 IRC | 2018 NDS | ASD

Section adequacy 18.9% (capacity to spare)

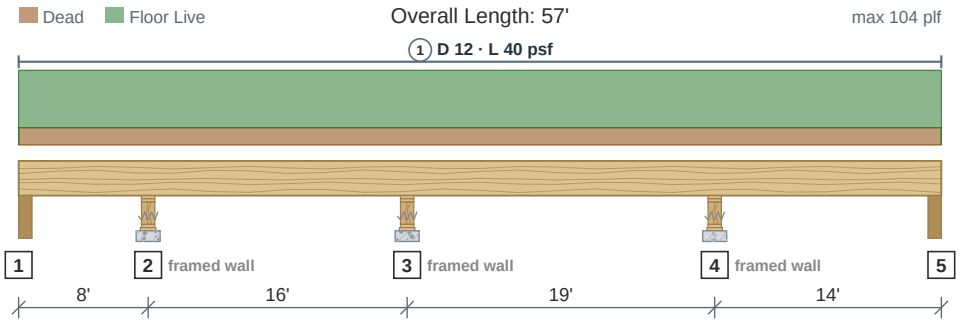

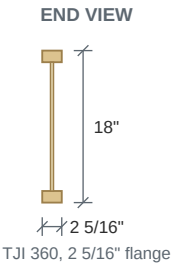

Drawing is conceptual. Locations are measured from the left end of the member; all dimensions are horizontal.

Design Results	Actual @ Location	Allowed	Result	LDF	Load Combination
Member Reaction (lbs)	1,996 @ 43'	2,460 (3 1/2")	Passed (81% used)	--	D+L
Shear (lbs)	1,024 @ 43'	2,425	Passed (42% used)	1.00	D+L
Moment (Ft-lbs)	3,046 @ 33' 7 9/16"	9,465	Passed (32% used)	1.00	D+L
Live Load Defl. (in)	0.081 @ 33' 6"	0.633	Passed (L/2,818)	--	L
Total Load Defl. (in)	0.109 @ 33' 6"	0.95	Passed (L/2,093)	--	D+L

- Deflection criteria: floor live alone L/360 (IRC Table R301.7); dead plus live L/240 (this member's own limit).
- Member self weight of 3.7 plf is included.
- Calculations per NDS 2018 and Weyerhaeuser TJ-4000 / ICC-ES ESR-1153, ASD, every load combination with its own load duration factor.

	Bearing Length		Loads to Supports (lbs)			
Supports	**Provided**	**Required**	**Dead**	**Floor Live**	**Total**	**Load goes to**
1 @ 0	3 1/2"	--	60	174	**234**	not linked
2 @ 8'	3 1/2"	--	360	1,039	**1,399**	not linked (framed wall)
3 @ 24'	3 1/2"	--	508	1,467	**1,974**	not linked (framed wall)
4 @ 43'	3 1/2"	--	513	1,482	**1,996**	Header #25, Footing - WD-#3 (a framed wall down to the foundation)
5 @ 57'	3"	--	138	398	**536**	not linked

Total = the governing ASD combination at that support ("up": the governing uplift, where another combination lifts it); the category columns are service loads.

Lateral Bracing	Bracing Intervals	Comments
Top Flange (Lu)	continuous	braced by the sheathing
Bottom Flange (Lu)	19' o/c	bracing per the manufacturer's details

Vertical Loads	Location	Trib. Width	Dead (0.90)	Floor Live (1.00)	Comments
0 - Self Weight (PLF)	0 to 57'	N/A	3.7	--	
1 - Uniform (PSF)	0 to 57'	24"	12	40	Typed on the member

Shear, Moment and Deflection

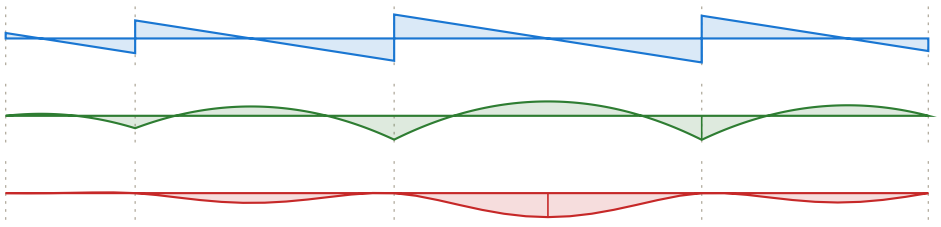

Shear (lbs)
D+L
max -1,024 @ 43'

Moment (ft-lbs)
D+L
max -3,046 @ 43'

Deflection (in)
D+L
0.109 in down @ 33' 6" (shear incl.)
limit 0.95 in on the span

Joists #8

(1) 18" Weyerhaeuser TJI 360 @ 24" o.c.

Level: Floor - 1st Level | Member type: Joist (Floor Joist) | Length: 24' | 2018 IRC | 2018 NDS | ASD

PASSED

Controls: Bearing 72% used

Section adequacy 27.8% (capacity to spare)

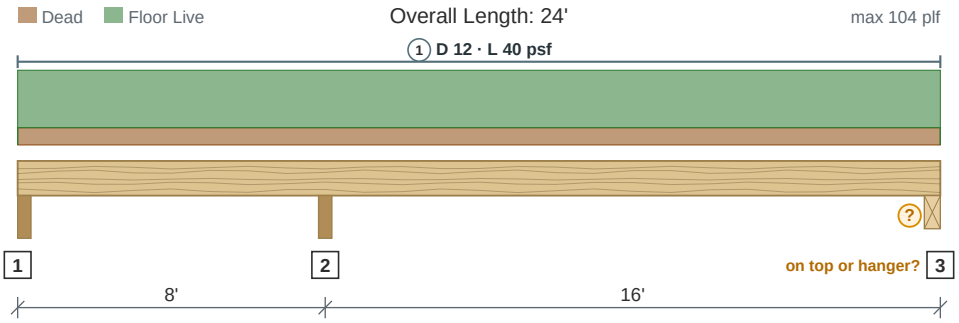

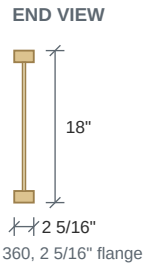

Drawing is conceptual. Locations are measured from the left end of the member; all dimensions are horizontal.

Design Results	Actual @ Location	Allowed	Result	LDF	Load Combination
Member Reaction (lbs)	1,777 @ 8'	2,460 (3 1/2")	Passed (72% used)	--	D+L
Shear (lbs)	1,023 @ 8'	2,425	Passed (42% used)	1.00	D+L
Moment (Ft-lbs)	2,585 @ 17' 6 1/4"	9,465	Passed (27% used)	1.00	D+L
Live Load Defl. (in)	0.083 @ 16' 10 11/16"	0.533	Passed (L/2,304)	--	L
Total Load Defl. (in)	0.112 @ 16' 10 11/16"	0.8	Passed (L/1,711)	--	D+L

- Deflection criteria: floor live alone L/360 (IRC Table R301.7); dead plus live L/240 (this member's own limit).
- Member self weight of 3.7 plf is included.
- Calculations per NDS 2018 and Weyerhaeuser TJ-4000 / ICC-ES ESR-1153, ASD, every load combination with its own load duration factor.

	Bearing Length		Loads to Supports (lbs)			
Supports	Provided	Required	Dead	Floor Live	Total	Load goes to
1 @ 0	3 1/2"	--	28	80	**108**	not linked
2 @ 8'	3 1/2"	--	457	1,320	**1,777**	not linked
3 @ 24'	3 1/2"	--	180	520	**700**	Header #20 (on top or in a hanger? not set -- checked as bearing on top)

Total = the governing ASD combination at that support ("up": the governing uplift, where another combination lifts it); the category columns are service loads.

Lateral Bracing	Bracing Intervals	Comments
Top Flange (Lu)	continuous	braced by the sheathing
Bottom Flange (Lu)	16' o/c	bracing per the manufacturer's details

Vertical Loads	Location	Trib. Width	Dead (0.90)	Floor Live (1.00)	Comments
0 - Self Weight (PLF)	0 to 24'	N/A	3.7	--	
1 - Uniform (PSF)	0 to 24'	24"	12	40	Typed on the member

Shear, Moment and Deflection

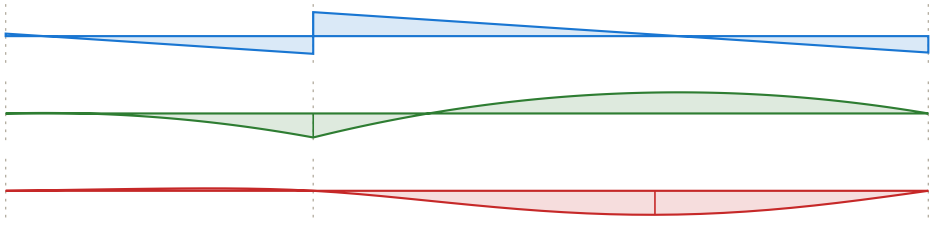

Shear (lbs)
D+L
max 1,023 @ 8'

Moment (ft-lbs)
D+L
max -2,585 @ 8'

Deflection (in)
D+L
0.112 in down @ 16' 10 11/16" (shear incl.)
limit 0.8 in on the span

Joists #9

PASSED

(1) 18" Weyerhaeuser TJI 360 @ 24" o.c.

Controls: Bearing 57% used

Level: Floor - 1st Level | Member type: Joist (Floor Joist) | Length: 16' | 2018 IRC | 2018 NDS | ASD

Section adequacy 42.8% (capacity to spare)

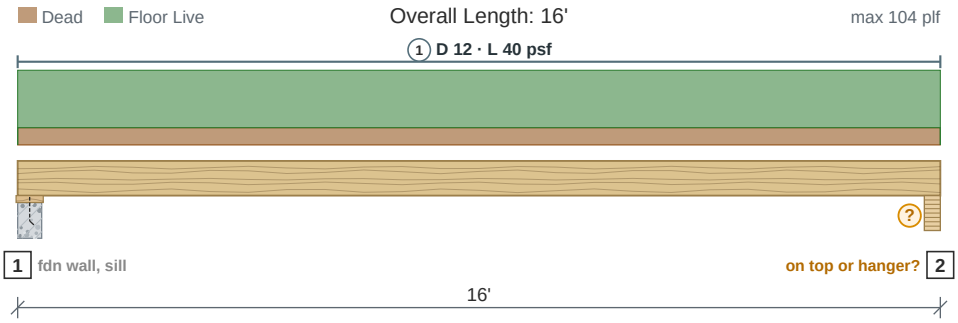

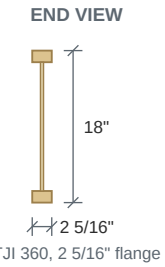

Drawing is conceptual. Locations are measured from the left end of the member; all dimensions are horizontal.

Design Results	Actual @ Location	Allowed	Result	LDF	Load Combination
Member Reaction (lbs)	862 @ 0	1,505 (3 1/2")	Passed (57% used)	--	D+L
Shear (lbs)	862 @ 0	2,425	Passed (36% used)	1.00	D+L
Moment (Ft-lbs)	3,446 @ 8'	9,465	Passed (36% used)	1.00	D+L
Live Load Defl. (in)	0.139 @ 8'	0.533	Passed (L/1,381)	--	L
Total Load Defl. (in)	0.187 @ 8'	0.8	Passed (L/1,026)	--	D+L

- Deflection criteria: floor live alone L/360 (IRC Table R301.7); dead plus live L/240 (this member's own limit).
- Member self weight of 3.7 plf is included.
- Calculations per NDS 2018 and Weyerhaeuser TJ-4000 / ICC-ES ESR-1153, ASD, every load combination with its own load duration factor.

	Bearing Length		Loads to Supports (lbs)			
Supports	**Provided**	**Required**	**Dead**	**Floor Live**	**Total**	**Load goes to**
1 @ 0	3 1/2"	--	222	640	**862**	Beam #10, Footing #6 (on the foundation wall, on its mud sill)
2 @ 16'	5 1/2"	--	222	640	**862**	Beam #11 (on top or in a hanger? not set -- checked as bearing on top)

Total = the governing ASD combination at that support ("up": the governing uplift, where another combination lifts it); the category columns are service loads.

Lateral Bracing	Bracing Intervals	Comments
Top Flange (Lu)	continuous	braced by the sheathing
Bottom Flange (Lu)	16' o/c	bracing per the manufacturer's details

Vertical Loads	Location	Trib. Width	Dead (0.90)	Floor Live (1.00)	Comments
0 - Self Weight (PLF)	0 to 16'	N/A	3.7	--	
1 - Uniform (PSF)	0 to 16'	24"	12	40	Typed on the member

Shear, Moment and Deflection

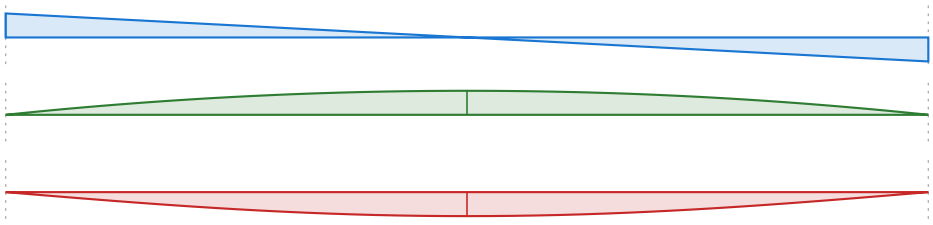

Shear (lbs)
D+L
max 862 @ 0

Moment (ft-lbs)
D+L
max 3,446 @ 8'

Deflection (in)
D+L
0.187 in down @ 8' (shear incl.)
limit 0.8 in on the span

Joists #10

PASSED

(1) 18" Weyerhaeuser TJI 360 @ 24" o.c.

Controls: Bearing 50% used

Level: Floor - 1st Level | Member type: Joist (Floor Joist) | Length: 14' | 2018 IRC | 2018 NDS | ASD

Section adequacy 49.9% (capacity to spare)

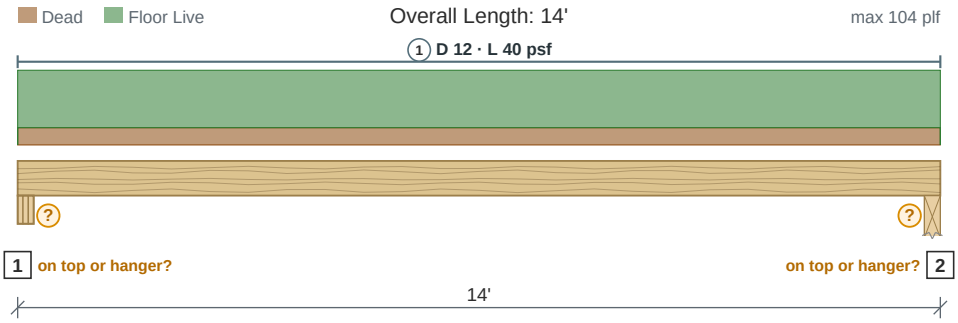

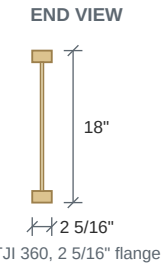

Drawing is conceptual. Locations are measured from the left end of the member; all dimensions are horizontal.

Design Results	Actual @ Location	Allowed	Result	LDF	Load Combination
Member Reaction (lbs)	754 @ 0	1,505 (5 1/4")	Passed (50% used)	--	D+L
Shear (lbs)	754 @ 0	2,425	Passed (31% used)	1.00	D+L
Moment (Ft-lbs)	2,639 @ 7'	9,465	Passed (28% used)	1.00	D+L
Live Load Defl. (in)	0.087 @ 7'	0.467	Passed (L/1,932)	--	L
Total Load Defl. (in)	0.117 @ 7'	0.7	Passed (L/1,435)	--	D+L

- Deflection criteria: floor live alone L/360 (IRC Table R301.7); dead plus live L/240 (this member's own limit).
- Member self weight of 3.7 plf is included.
- Calculations per NDS 2018 and Weyerhaeuser TJ-4000 / ICC-ES ESR-1153, ASD, every load combination with its own load duration factor.

	Bearing Length		Loads to Supports (lbs)			
Supports	**Provided**	**Required**	**Dead**	**Floor Live**	**Total**	**Load goes to**
1 @ 0	5 1/4"	--	194	560	**754**	Header #21 (on top or in a hanger? not set -- checked as bearing on top)
2 @ 14'	3 1/2"	--	194	560	**754**	Header #24 (on top or in a hanger? not set -- checked as bearing on top)

Total = the governing ASD combination at that support ("up": the governing uplift, where another combination lifts it); the category columns are service loads.

Lateral Bracing	Bracing Intervals	Comments
Top Flange (Lu)	continuous	braced by the sheathing
Bottom Flange (Lu)	14' o/c	bracing per the manufacturer's details

Vertical Loads	Location	Trib. Width	Dead (0.90)	Floor Live (1.00)	Comments
0 - Self Weight (PLF)	0 to 14'	N/A	3.7	--	
1 - Uniform (PSF)	0 to 14'	24"	12	40	Typed on the member

Shear, Moment and Deflection

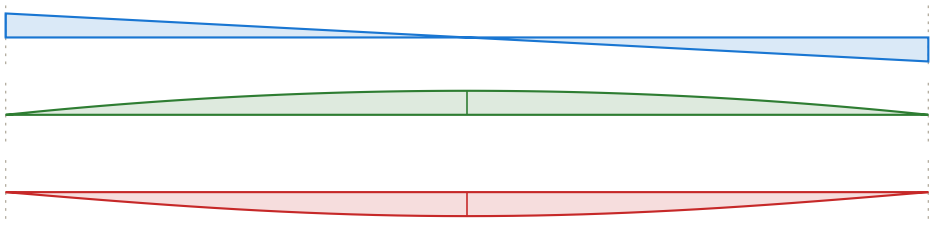

Shear (lbs)
D+L
max 754 @ 0

Moment (ft-lbs)
D+L
max 2,639 @ 7'

Deflection (in)
D+L
0.117 in down @ 7' (shear incl.)
limit 0.7 in on the span

Joists #14

PASSED

(1) 16" Weyerhaeuser TJI 360 @ 24" o.c.

Level: Floor - 1st Level | Member type: Joist (Floor Joist) | Length: 16' 6" | 2018 IRC | 2018 NDS | ASD

Controls: Bearing 59% used
Section adequacy 41.1% (capacity to spare)

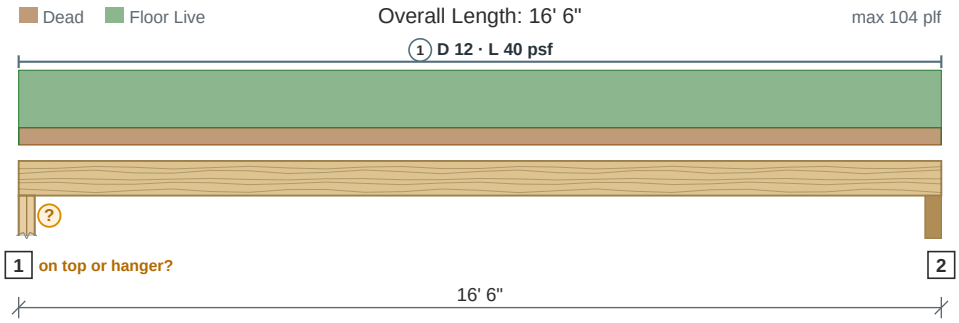

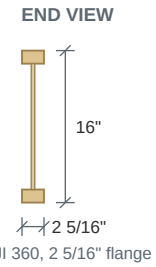

Drawing is conceptual. Locations are measured from the left end of the member; all dimensions are horizontal.

Design Results	Actual @ Location	Allowed	Result	LDF	Load Combination
Member Reaction (lbs)	887 @ 0	1,505 (3 1/2")	Passed (59% used)	--	D+L
Shear (lbs)	887 @ 0	2,190	Passed (40% used)	1.00	D+L
Moment (Ft-lbs)	3,658 @ 8' 3"	8,405	Passed (44% used)	1.00	D+L
Live Load Defl. (in)	0.197 @ 8' 3"	0.55	Passed (L/1,005)	--	L
Total Load Defl. (in)	0.265 @ 8' 3"	0.825	Passed (L/748)	--	D+L

- Deflection criteria: floor live alone L/360 (IRC Table R301.7); dead plus live L/240 (this member's own limit).
- Member self weight of 3.5 plf is included.
- Calculations per NDS 2018 and Weyerhaeuser TJ-4000 / ICC-ES ESR-1153, ASD, every load combination with its own load duration factor.

	Bearing Length		Loads to Supports (lbs)			
Supports	**Provided**	**Required**	**Dead**	**Floor Live**	**Total**	**Load goes to**
1 @ 0	3 1/2"	--	227	660	**887**	Beam #19 (on top or in a hanger? not set -- checked as bearing on top)
2 @ 16' 6"	3 1/2"	--	227	660	**887**	not linked

Total = the governing ASD combination at that support ("up": the governing uplift, where another combination lifts it); the category columns are service loads.

Lateral Bracing	Bracing Intervals	Comments
Top Flange (Lu)	continuous	braced by the sheathing
Bottom Flange (Lu)	16' 6" o/c	bracing per the manufacturer's details

Vertical Loads	Location	Trib. Width	Dead (0.90)	Floor Live (1.00)	Comments
0 - Self Weight (PLF)	0 to 16' 6"	N/A	3.5	--	
1 - Uniform (PSF)	0 to 16' 6"	24"	12	40	Typed on the member

Shear, Moment and Deflection

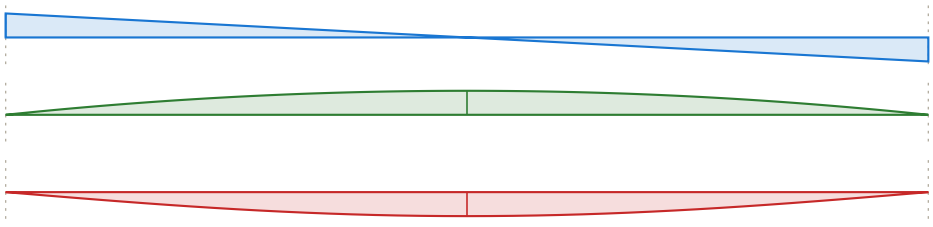

Shear (lbs)
D+L
max 887 @ 0

Moment (ft-lbs)
D+L
max 3,658 @ 8' 3"

Deflection (in)
D+L
0.265 in down @ 8' 3" (shear incl.)
limit 0.825 in on the span

Joists #15

PASSED

(1) 18" Weyerhaeuser TJI 560 @ 24" o.c.

Controls: Bearing 44% used

Level: Floor - 1st Level | Member type: Joist (Floor Joist) | Length: 14' | 2018 IRC | 2018 NDS | ASD

Section adequacy 55.8% (capacity to spare)

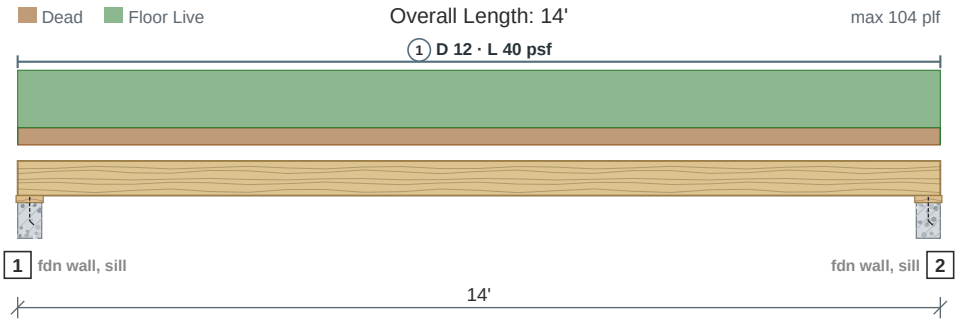

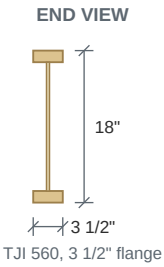

Drawing is conceptual. Locations are measured from the left end of the member; all dimensions are horizontal.

Design Results	Actual @ Location	Allowed	Result	LDF	Load Combination
Member Reaction (lbs)	762 @ 0	1,725 (3 1/2")	Passed (44% used)	--	D+L
Shear (lbs)	762 @ 0	3,030	Passed (25% used)	1.00	D+L
Moment (Ft-lbs)	2,666 @ 7'	14,550	Passed (18% used)	1.00	D+L
Live Load Defl. (in)	0.062 @ 7'	0.467	Passed (L/2,704)	--	L
Total Load Defl. (in)	0.084 @ 7'	0.7	Passed (L/1,989)	--	D+L

- Deflection criteria: floor live alone L/360 (IRC Table R301.7); dead plus live L/240 (this member's own limit).
- Member self weight of 4.8 plf is included.
- Calculations per NDS 2018 and Weyerhaeuser TJ-4000 / ICC-ES ESR-1153, ASD, every load combination with its own load duration factor.

	Bearing Length		Loads to Supports (lbs)			
Supports	**Provided**	**Required**	**Dead**	**Floor Live**	**Total**	**Load goes to**
1 @ 0	3 1/2"	--	202	560	**762**	Footing #9 (on the foundation wall, on its mud sill)
2 @ 14'	3 1/2"	--	202	560	**762**	Footing #10 (on the foundation wall, on its mud sill)

Total = the governing ASD combination at that support ("up": the governing uplift, where another combination lifts it); the category columns are service loads.

Lateral Bracing	Bracing Intervals	Comments
Top Flange (Lu)	continuous	braced by the sheathing
Bottom Flange (Lu)	14' o/c	bracing per the manufacturer's details

Vertical Loads	Location	Trib. Width	Dead (0.90)	Floor Live (1.00)	Comments
0 - Self Weight (PLF)	0 to 14'	N/A	4.8	--	
1 - Uniform (PSF)	0 to 14'	24"	12	40	Typed on the member

Shear, Moment and Deflection

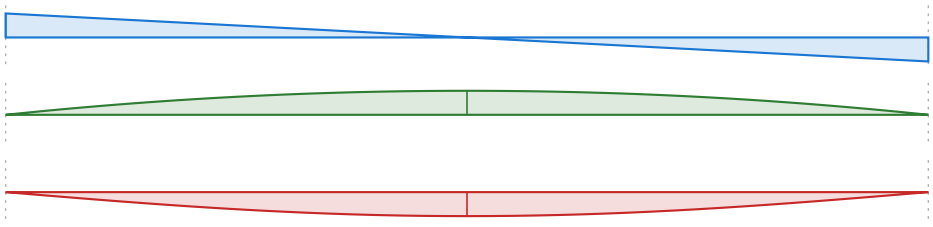

Shear (lbs)
D+L
max 762 @ 0

Moment (ft-lbs)
D+L
max 2,666 @ 7'

Deflection (in)
D+L
0.084 in down @ 7' (shear incl.)
limit 0.7 in on the span

New Hip Beam

(1) 14" Weyerhaeuser TJI 110

Level: Roof | Member type: Beam (Hip Beam) | Length: 5' 7 7/8" | 2018 IRC | 2018 NDS | ASD

PASSED

Controls: Bearing 13% used

Section adequacy 86.8% (capacity to spare)

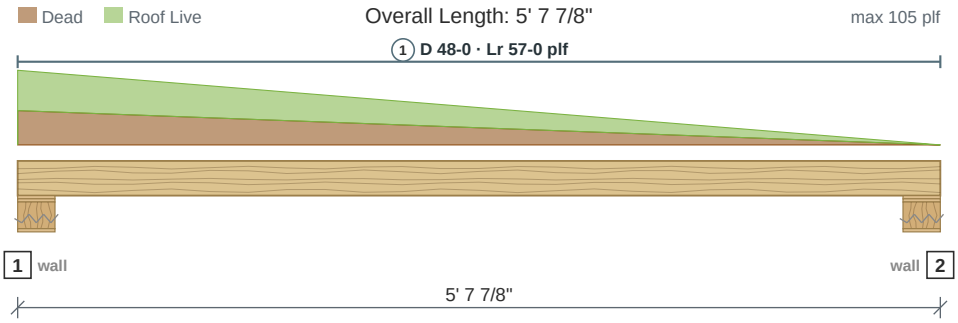

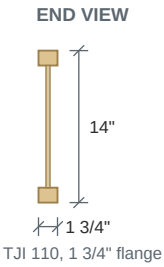

Drawing is conceptual. Locations are measured from the left end of the member; all dimensions are horizontal.

Design Results	Actual @ Location	Allowed	Result	LDF	Load Combination
Member Reaction (lbs)	205 @ 0	1,553 (3")	Passed (13% used)	--	D+Lr
Shear (lbs)	205 @ 0	2,325	Passed (9% used)	1.25	D+Lr
Moment (Ft-lbs)	226 @ 2' 4 7/8"	4,675	Passed (5% used)	1.25	D+Lr
Live Load Defl. (in)	0.003 @ 2' 8 1/4"	0.283	Passed (L/9999+)	--	Lr
Total Load Defl. (in)	0.007 @ 2' 8 1/4"	0.377	Passed (L/9999+)	--	D+Lr

- Deflection criteria: roof live or snow alone L/240 (IRC Table R301.7); dead plus live L/180 (this member's own limit).
- Member self weight of 2.8 plf is included.
- Calculations per NDS 2018 and Weyerhaeuser TJ-4000 / ICC-ES ESR-1153, ASD, every load combination with its own load duration factor.

	Bearing Length		Loads to Supports (lbs)			
Supports	Provided	Required	Dead	Roof Live	Total	Load goes to
1 @ 0	3"	--	99	107	**205**	Bearing wall (marked)
2 @ 5' 7 7/8"	3"	--	53	53	**107**	Bearing wall (marked)

Total = the governing ASD combination at that support ("up": the governing uplift, where another combination lifts it); the category columns are service loads.

Lateral Bracing	Bracing Intervals	Comments
Top Flange (Lu)	continuous	braced by the sheathing
Bottom Flange (Lu)	5' 7 7/8" o/c	bracing per the manufacturer's details

Vertical Loads	Location	Trib. Width	Dead (0.90)	Roof Live (1.25)	Comments
0 - Self Weight (PLF)	0 to 5' 7 7/8"	N/A	2.8	--	
1 - Trapezoidal (PLF)	0 to 5' 7 7/8"	N/A	48.1 - 0	56.6 - 0	Typed on the member

Shear, Moment and Deflection

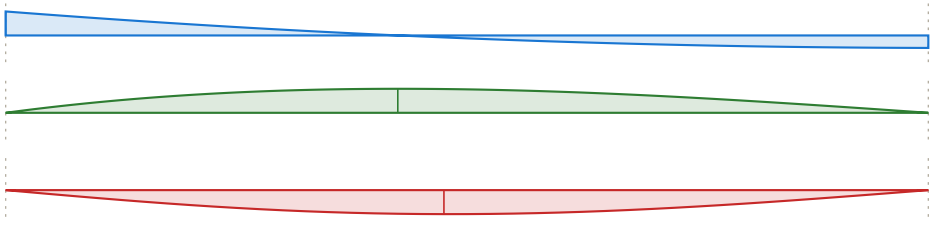

Shear (lbs)
D+Lr
max 205 @ 0

Moment (ft-lbs)
D+Lr
max 226 @ 2' 4 7/8"

Deflection (in)
D+Lr
0.007 in down @ 2' 8 1/4" (shear incl.)
limit 0.377 in on the span

Outlookers

PASSED

(1) 2x6 SP No. 2 (1 1/2" x 5 1/2") @ 24" o.c.

Controls: Moment 39% used

Level: Roof | Member type: Outlooker (Roof Rafter) | Length: 5' | 2018 IRC | 2018 NDS | ASD

Section adequacy 61% (capacity to spare)

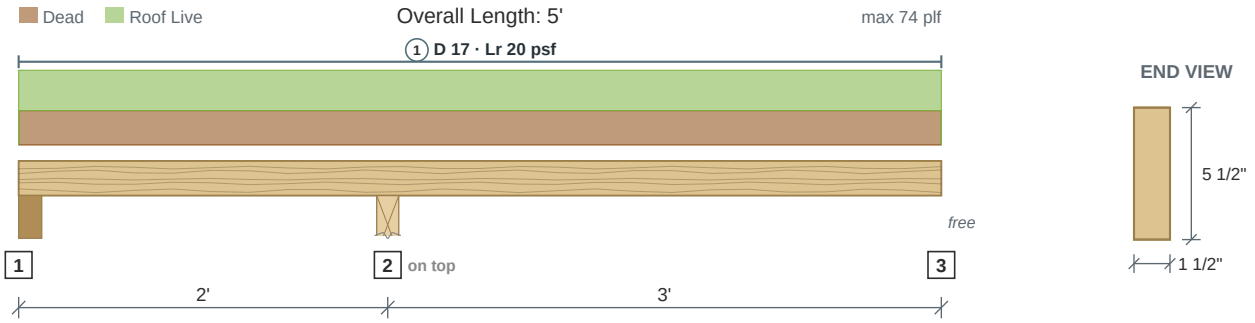

Drawing is conceptual. Locations are measured from the left end of the member; all dimensions are horizontal.

Design Results	Actual @ Location	Allowed	Result	LDF	Load Combination
Member Reaction (lbs)	474 @ 2'	4,979 (5 1/2")	Passed (10% used)	--	
Shear (lbs)	194 @ 1' 3 3/4"	1,203	Passed (16% used)	1.25	D+Lr
Neg Moment (Ft-lbs)	-341 @ 2'	875	Passed (39% used)	1.25	D+Lr
Live Load Defl. (in)	0.043 @ 5'	0.3	Passed (2L/1,673)	--	Lr
Total Load Defl. (in)	0.082 @ 5'	0.4	Passed (2L/882)	--	D+Lr

- Deflection criteria: roof live or snow alone L/240 (IRC Table R301.7); dead plus live L/180 (this member's own limit).
- Overhang deflection criteria: LL (2L/240) and TL (2L/180) -- a cantilever is limited on twice its length.
- Bending adjustment factors: CD = 1.25, Cr = 1.15, CL = 0.966 (D+Lr).
- Beam stability (NDS 3.3.3) governs bending: negative moment 341 lbf-ft, 2.00-5.00 ft, CL 0.966 (unbraced 3.0 ft).
- Member self weight of 1.9 plf is included.
- Calculations per NDS 2018, ASD, every load combination with its own load duration factor.

	Bearing Length		Loads to Supports (lbs)			
Supports	**Provided**	**Required**	**Dead**	**Roof Live**	**Total**	**Load goes to**
1 @ 0	1 1/2"	1/8"	-45	-50	**-95**	not linked
2 @ 2'	5 1/2"	3/16"	224	250	**474**	Header #13, Beam #7, Header #17, Header #23 (bears on top)
3 @ 5'	--	--	--	--	--	free end (cantilever tip)

Total = the governing ASD combination at that support ("up": the governing uplift, where another combination lifts it); the category columns are service loads.

Lateral Bracing	Bracing Intervals	Comments
Top Edge (Lu)	continuous	braced by the sheathing
Bottom Edge (Lu)	3' o/c	governs C_L here: the bottom edge is in compression

Vertical Loads	Location	Trib. Width	Dead (0.90)	Roof Live (1.25)	Comments
0 - Self Weight (PLF)	0 to 5'	N/A	1.9	--	
1 - Uniform (PSF)	0 to 5'	24"	17	20	Typed on the member

Shear, Moment and Deflection

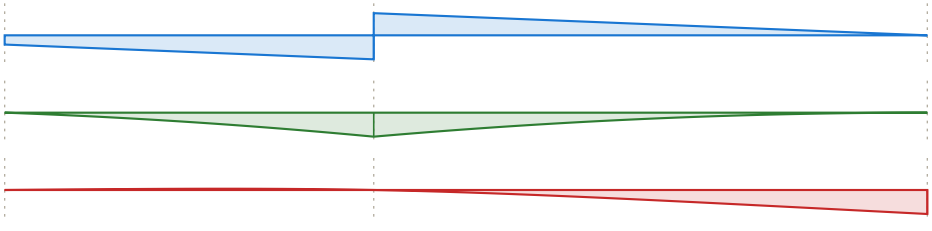

Shear (lbs)
D+Lr
max -247 @ 2'

Moment (ft-lbs)
D+Lr
max -341 @ 2'

Deflection (in)
D+Lr
0.082 in down @ 5'
limit 0.4 in on 2L (cantilever)

Footing #1

PASSED

Restrained Retaining Wall 7' retained -- 1' 9" x 11" footing, 10" concrete stem

Level: Basement | f'c 3,000 psi | Fy 60 ksi | bearing 1,500 psf | at-rest 35 psf/ft | ACI 318-19 | ASCE 7-16

Controls: Soil bearing, toe 96% used

Soil bearing 1,438 / 1,438 psf of 1,500

What Loads It

click a box to go to that member

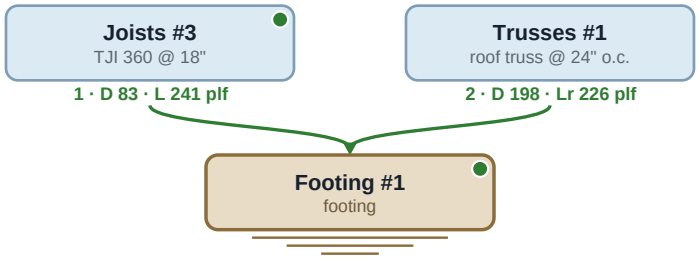

Design

as entered in the retaining wall, the links' loads on the stem

Wall & Soil	
Wall	Restrained at the top
Retained height	7'
Wall above the soil	2'
Top support	9'
Base	fixed
Allowable bearing	1,500 psf
At-rest pressure	35 psf/ft
Passive pressure	250 psf/ft
Soil density	140 pcf
Footing-soil friction	0.4

Loads	
On the stem (plf)	
Dead	281 plf
Floor live	241 plf
Roof live	226 plf
Required FS	overturning 1.5, sliding 1.5

Stem & Footing	
Stem	10" concrete
Stem vertical bars	#5 @ 16", centered
Stem horizontal bars	#4 @ 10"
Toe	5 1/2"
Heel (with the stem)	1' 3 1/2"
Footing thickness	11"
Toe bars (bottom)	#4 @ 10"
Heel bars (top)	none (plain)
Cover, bottom / top	2 3/4" / 2 3/4"
Sliding	a slab takes it

Construction Detail

the wall as built; bars, dowels, hooks and dimensions

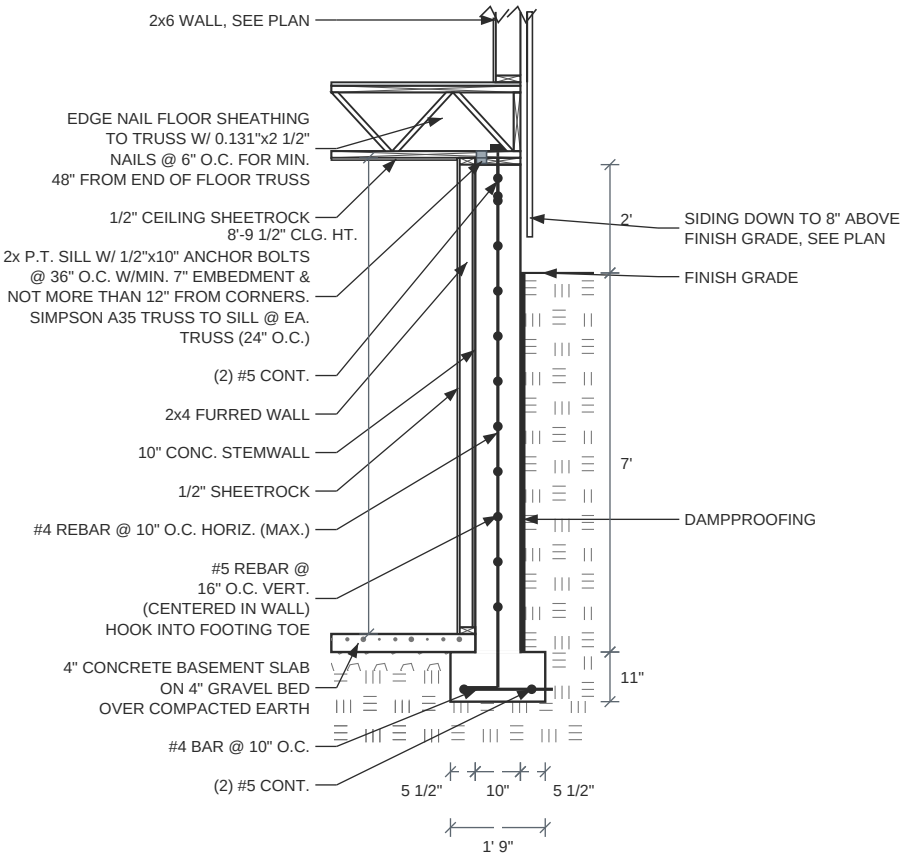

FOOTING #1 - RESTRAINED FOUNDATION DETAIL

Footing #1 (continued)

Restrained Retaining Wall | 7' retained -- 1' 9" x 11" footing, 10" concrete stem

Stability

service loads, ASCE 7 combinations

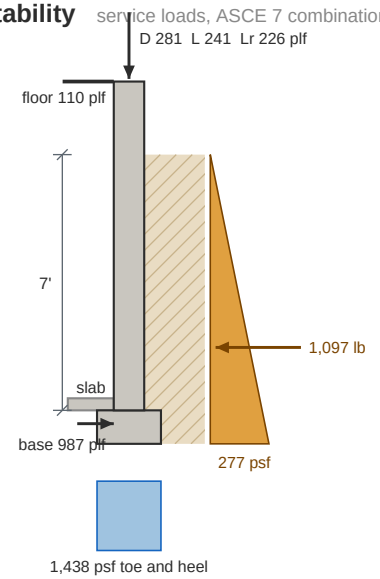

Reactions (service)	
Top support (the floor)	110 plf
Base, to the footing	987 plf
Moment into the footing	1,015 lb-ft
Base fixity	fixed
Top support height	9'

Sliding: the slab takes 987 plf at the top of the footing.
Bearing: 2,516 plf down, 0 in off center (middle third); toe 1,438 / heel 1,438 psf of 1,500 allowed.

Design Results	Actual	Allowed	Result	Method	Load Combination
Sliding (plf into the slab)	987	--	Passed (the slab takes it)	ASD	
Sill anchor bolts, 1/2" @ 36" o.c. (plf)	110	115	Passed (96%)	ASD	H, C_D 0.9
Floor tie, Simpson A35 at each truss @ 24" o.c. (lb)	219	531	Passed (41%)	ASD	H, C_D 0.9
Sheathing nails, 0.131" x 2 1/2" @ 6" o.c. over the first 48 in. of each truss (lb)	219	634	Passed (34%)	ASD	H, C_D 0.9
Soil bearing, toe (psf)	1,438	1,500	Passed (96%)	ASD	every load at full (D+L+Lr+S+H)
Soil bearing, heel (psf)	1,438	1,500	Passed (96%)	ASD	every load at full (D+L+Lr+S+H)
Stem at the top support: bending (lb-ft)	0	4,993	Passed (0%)	LRFD	1.2D+1.6L+0.5(Lr/S)+1.6H
Stem at the top support: shear (psi)	2.9	51.6	Passed (6%)	LRFD	1.2D+1.6L+0.5(Lr/S)+1.6H
Stem, max. between top and base: bending (lb-ft)	643	4,993	Passed (13%)	LRFD	1.2D+1.6L+0.5(Lr/S)+1.6H
Stem, max. between top and base: shear (psi)	0.0	51.6	Passed (0%)	LRFD	1.2D+1.6L+0.5(Lr/S)+1.6H
Stem at the base: bending (lb-ft)	1,624	4,993	Passed (33%)	LRFD	1.2D+1.6L+0.5(Lr/S)+1.6H
Stem at the base: shear (psi)	19.9	51.6	Passed (39%)	LRFD	1.2D+1.6L+0.5(Lr/S)+1.6H
Toe: bending (lb-ft)	167	8,386	Passed (2%)	LRFD	1.2D+1.6(Lr/S)+L+1.6H
Toe: one-way shear (psi)	0.0	44.6	Passed (0%)	LRFD	1.2D+1.6(Lr/S)+L+1.6H
Heel: bending (lb-ft) (plain concrete)	-44	2,218	Passed (2%)	LRFD	1.2D+1.6(Lr/S)+L+1.6H
Heel: one-way shear (psi)	1.8	43.8	Passed (4%)	LRFD	1.2D+1.6(Lr/S)+L+1.6H
Footing thickness (in)	11	9 min	Passed (82%)	ACI 13.3.1.2	

- Stem dowels #5: develop 16.4 in into the stem (ACI 318-19 25.4.2), standard hook 7.9 in into the footing (25.4.3), lap 21.4 in (25.5.2, Class B).
- Stability at service level: overturning about the toe and sliding with FS 1.5 and 1.5 (IBC 1807.2.3), soil bearing against the allowable; loads combined to ASCE 7-16.
- Lateral earth pressure as an equivalent fluid of 35 psf/ft on the heel side (IBC 1610.1) (at rest, the wall braced); passive 250 psf/ft in front of the toe, the top 12" ignored; friction 0.4.
- Stem and footing at strength level, ACI 318-19: flexure and one-way shear (22.5.5.1 with the bars' ratio), minimum steel 7.6.1.1 and 11.6.1, effective depth 13.3.1.2.
- The slab on the toe side takes all the sliding force at the top of the footing; the slab's own design is not part of this sheet.

Applied Loads	Location	Trib. Width	Dead	Floor Live	Roof Live	Comments
1 - Uniform (PLF)	--	N/A	197.6	--	225.6	Linked from: Trusses #1, Support 2
2 - Uniform (PLF)	--	N/A	83.3	240.7	--	Linked from: Joists #3, Support 1

Footing #4

PASSED

Restrained Retaining Wall 8' retained -- 2' x 11" footing, 10" concrete stem

Level: Basement | f'c 3,000 psi | Fy 60 ksi | bearing 1,500 psf | at-rest 35 psf/ft | ACI 318-19 | ASCE 7-16

Controls: Floor tie, Simpson A35 at each block @ 36" o.c. 99% used

Soil bearing 1,106 / 1,106 psf of 1,500

What Loads It

click a box to go to that member

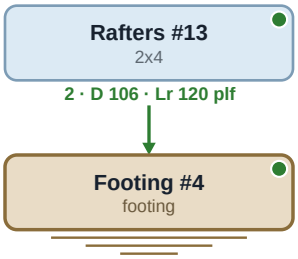

Design

as entered in the retaining wall, the links' loads on the stem

Wall & Soil	
Wall	Restrained at the top
Retained height	8'
Wall above the soil	1' 2 1/2"
Top support	9' 2 1/2"
Base	fixed
Allowable bearing	1,500 psf
At-rest pressure	35 psf/ft
Passive pressure	250 psf/ft
Soil density	140 pcf
Footing-soil friction	0.4

Loads	
On the stem (plf)	
Dead	106 plf
Roof live	120 plf
Required FS	overturning 1.5, sliding 1.5

Stem & Footing	
Stem	10" concrete
Stem vertical bars	#5 @ 16", centered
Stem horizontal bars	#4 @ 10"
Toe	7 1/2"
Heel (with the stem)	1' 4 1/2"
Footing thickness	11"
Toe bars (bottom)	#6 @ 18"
Heel bars (top)	#6 @ 18"
Cover, bottom / top	3" / 3"
Sliding	a slab takes it

Construction Detail

the wall as built; bars, dowels, hooks and dimensions

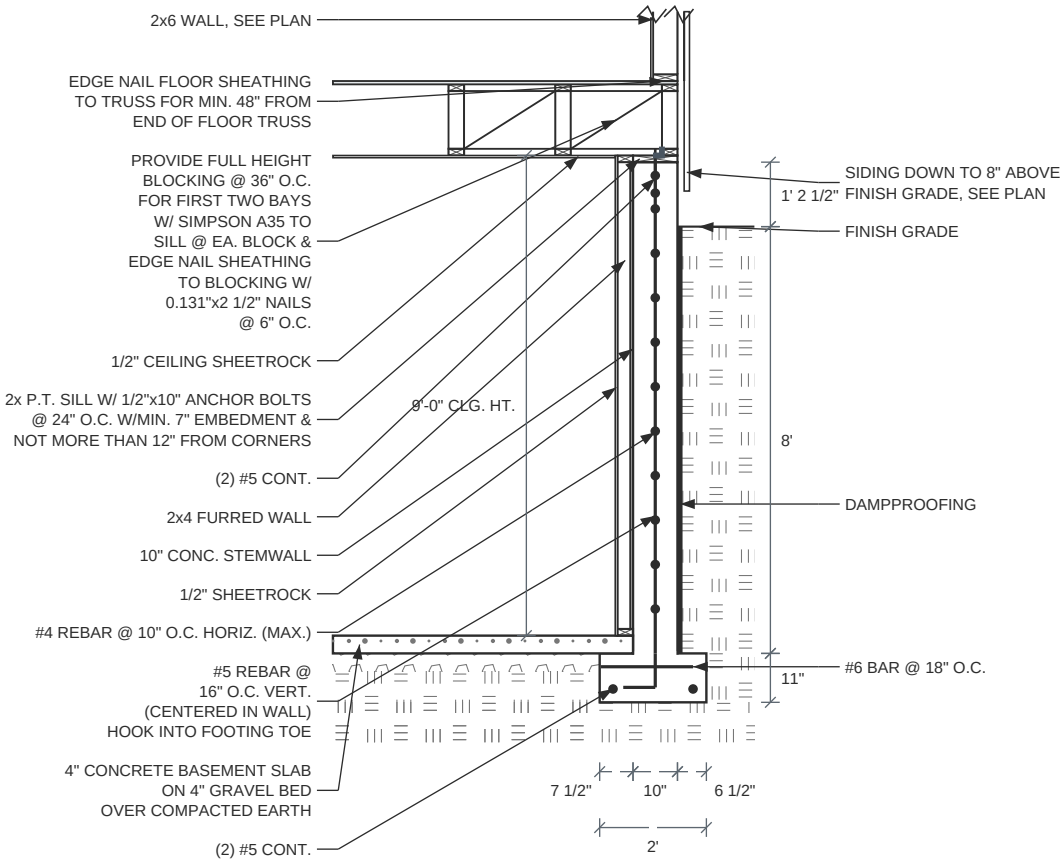

FOOTING #4 - RESTRAINED FOUNDATION DETAIL

Footing #4 (continued)

Restrained Retaining Wall | 8' retained -- 2' x 11" footing, 10" concrete stem

Stability

service loads, ASCE 7 combinations

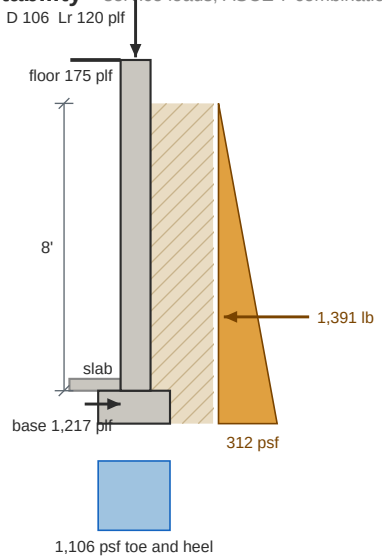

Reactions (service)	
Top support (the floor)	175 plf
Base, to the footing	1,217 plf
Moment into the footing	1,379 lb-ft
Base fixity	fixed
Top support height	9' 2 1/2"

Sliding: the slab takes 1,217 plf at the top of the footing.
Bearing: 2,211 plf down, 0 in off center (middle third); toe 1,106 / heel 1,106 psf of 1,500 allowed.

Design Results	Actual	Allowed	Result	Method	Load Combination
Sliding (plf into the slab)	1,217	--	Passed (the slab takes it)	ASD	
Sill anchor bolts, 1/2" @ 24" o.c. (plf)	175	184	Passed (95%)	ASD	H, C_D 0.9
Floor tie, Simpson A35 at each block @ 36" o.c. (lb)	524	531	Passed (99%)	ASD	H, C_D 0.9
Sheathing nails, 0.131" x 2 1/2" @ 6" o.c. over the blocking in the first two bays (lb)	524	555	Passed (94%)	ASD	H, C_D 0.9
Soil bearing, toe (psf)	1,106	1,500	Passed (74%)	ASD	every load at full (D+L+Lr+S+H)
Soil bearing, heel (psf)	1,106	1,500	Passed (74%)	ASD	every load at full (D+L+Lr+S+H)
Stem at the top support: bending (lb-ft)	0	4,993	Passed (0%)	LRFD	1.2D+1.6L+0.5(Lr/S)+1.6H
Stem at the top support: shear (psi)	4.7	51.6	Passed (9%)	LRFD	1.2D+1.6L+0.5(Lr/S)+1.6H
Stem, max. between top and base: bending (lb-ft)	926	4,993	Passed (19%)	LRFD	1.2D+1.6L+0.5(Lr/S)+1.6H
Stem, max. between top and base: shear (psi)	0.0	51.6	Passed (0%)	LRFD	1.2D+1.6L+0.5(Lr/S)+1.6H
Stem at the base: bending (lb-ft)	2,206	4,993	Passed (44%)	LRFD	1.2D+1.6L+0.5(Lr/S)+1.6H
Stem at the base: shear (psi)	25.2	51.6	Passed (49%)	LRFD	1.2D+1.6L+0.5(Lr/S)+1.6H
Toe: bending (lb-ft)	250	9,685	Passed (3%)	LRFD	1.4D
Toe: one-way shear (psi)	0.0	48.5	Passed (0%)	LRFD	1.4D
Heel: bending (lb-ft) (plain concrete)	43	2,218	Passed (2%)	LRFD	1.4D
Heel: one-way shear (psi)	1.5	43.8	Passed (3%)	LRFD	1.4D
Footing thickness (in)	11	9.4 min	Passed (85%)	ACI 13.3.1.2	

- Stem dowels #5: develop 16.4 in into the stem (ACI 318-19 25.4.2), standard hook 7.9 in into the footing (25.4.3), lap 21.4 in (25.5.2, Class B).
- Stability at service level: overturning about the toe and sliding with FS 1.5 and 1.5 (IBC 1807.2.3), soil bearing against the allowable; loads combined to ASCE 7-16.
- Lateral earth pressure as an equivalent fluid of 35 psf/ft on the heel side (IBC 1610.1) (at rest, the wall braced); passive 250 psf/ft in front of the toe, the top 12" ignored; friction 0.4.
- Stem and footing at strength level, ACI 318-19: flexure and one-way shear (22.5.5.1 with the bars' ratio), minimum steel 7.6.1.1 and 11.6.1, effective depth 13.3.1.2.
- The slab on the toe side takes all the sliding force at the top of the footing; the slab's own design is not part of this sheet.

Applied Loads	Location	Trib. Width	Dead	Roof Live	Comments
1 - Uniform (PLF)	--	N/A	105.9	120	Linked from: Rafters #13, Support 2

Footing #5

PASSED

Restrained Retaining Wall 5' retained -- 2' x 11" footing, 10" concrete stem

Level: Basement | f'c 3,000 psi | Fy 60 ksi | bearing 1,500 psf | at-rest 35 psf/ft | ACI 318-19 | ASCE 7-16

Controls: Soil bearing, toe 87% used

Soil bearing 1,310 / 1,310 psf of 1,500

What Loads It

click a box to go to that member

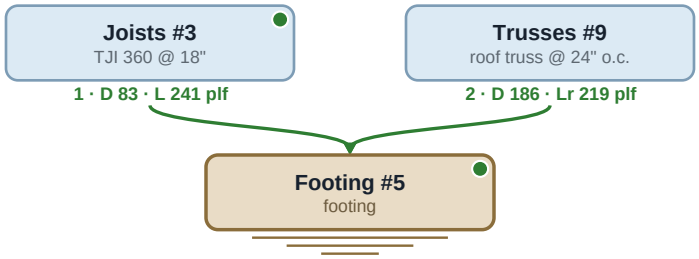

Design

as entered in the retaining wall, the links' loads on the stem

Wall & Soil	
Wall	Restrained at the top
Retained height	5'
Wall above the soil	4' 2 1/2"
Top support	9' 2 1/2"
Base	fixed
Allowable bearing	1,500 psf
At-rest pressure	35 psf/ft
Passive pressure	250 psf/ft
Soil density	140 pcf
Footing-soil friction	0.4

Loads	
On the stem (plf)	
Dead	269 plf
Floor live	241 plf
Roof live	219 plf
Surcharge over the heel	40 psf
Surcharge over the toe	40 psf
Required FS	overturning 1.5, sliding 1.5

Stem & Footing	
Stem	10" concrete
Stem vertical bars	#5 @ 16", centered
Stem horizontal bars	#4 @ 10"
Toe	6"
Heel (with the stem)	1' 6"
Footing thickness	11"
Toe bars (bottom)	#4 @ 8"
Heel bars (top)	none (plain)
Cover, bottom / top	3" / 3"
Sliding	a slab takes it

Construction Detail

the wall as built; bars, dowels, hooks and dimensions

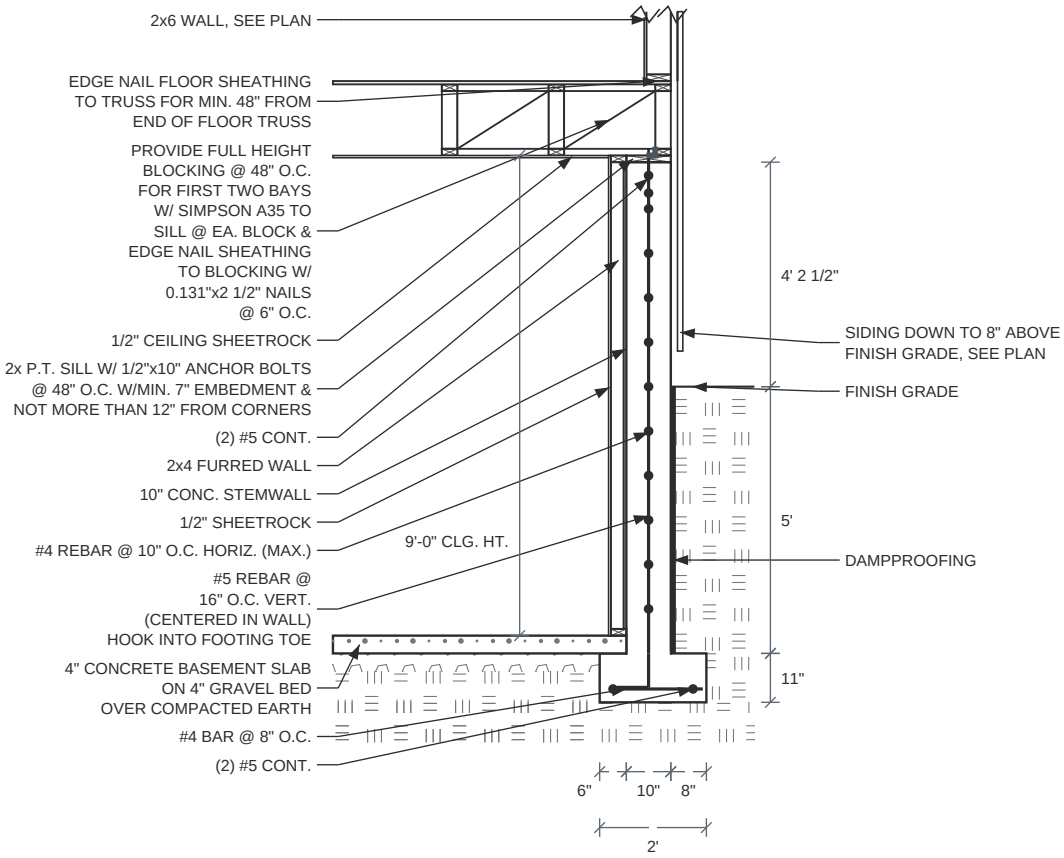

FOOTING #5 - RESTRAINED FOUNDATION DETAIL

Footing #5 (continued)

Restrained Retaining Wall | 5' retained -- 2' x 11" footing, 10" concrete stem

Stability

service loads, ASCE 7 combinations

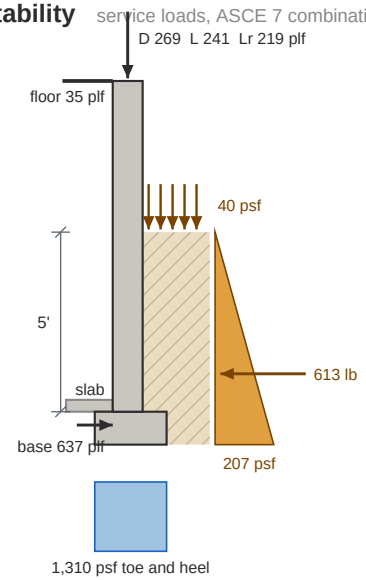

Reactions (service)	
Top support (the floor)	35 plf
Base, to the footing	637 plf
Moment into the footing	531 lb-ft
Base fixity	fixed
Top support height	9' 2 1/2"

Sliding: the slab takes 637 plf at the top of the footing.
Bearing: 2,621 plf down, 0 in off center (middle third); toe 1,310 / heel 1,310 psf of 1,500 allowed.

Design Results	Actual	Allowed	Result	Method	Load Combination
Sliding (plf into the slab)	637	--	Passed (the slab takes it)	ASD	
Sill anchor bolts, 1/2" @ 48" o.c. (plf)	35	95	Passed (37%)	ASD	H+L, C_D 1
Floor tie, Simpson A35 at each block @ 48" o.c. (lb)	140	590	Passed (24%)	ASD	H+L, C_D 1
Sheathing nails, 0.131" x 2 1/2" @ 6" o.c. over the blocking in the first two bays (lb)	140	616	Passed (23%)	ASD	H+L, C_D 1
Soil bearing, toe (psf)	1,310	1,500	Passed (87%)	ASD	every load at full (D+L+Lr+S+H)
Soil bearing, heel (psf)	1,310	1,500	Passed (87%)	ASD	every load at full (D+L+Lr+S+H)
Stem at the top support: bending (lb-ft)	0	4,993	Passed (0%)	LRFD	1.2D+1.6L+0.5(Lr/S)+1.6H
Stem at the top support: shear (psi)	0.9	51.6	Passed (2%)	LRFD	1.2D+1.6L+0.5(Lr/S)+1.6H
Stem, max. between top and base: bending (lb-ft)	276	4,993	Passed (6%)	LRFD	1.2D+1.6L+0.5(Lr/S)+1.6H
Stem, max. between top and base: shear (psi)	0.0	51.6	Passed (0%)	LRFD	1.2D+1.6L+0.5(Lr/S)+1.6H
Stem at the base: bending (lb-ft)	849	4,993	Passed (17%)	LRFD	1.2D+1.6L+0.5(Lr/S)+1.6H
Stem at the base: shear (psi)	12.1	51.6	Passed (23%)	LRFD	1.2D+1.6L+0.5(Lr/S)+1.6H
Toe: bending (lb-ft)	173	10,065	Passed (2%)	LRFD	1.2D+1.6(Lr/S)+L+1.6H
Toe: one-way shear (psi)	0.0	48.6	Passed (0%)	LRFD	1.2D+1.6(Lr/S)+L+1.6H
Heel: bending (lb-ft) (plain concrete)	-122	2,218	Passed (5%)	LRFD	1.2D+1.6(Lr/S)+L+1.6H
Heel: one-way shear (psi)	3.4	43.8	Passed (8%)	LRFD	1.2D+1.6(Lr/S)+L+1.6H
Footing thickness (in)	11	9.2 min	Passed (84%)	ACI 13.3.1.2	

- Stem dowels #5: develop 16.4 in into the stem (ACI 318-19 25.4.2), standard hook 7.9 in into the footing (25.4.3), lap 21.4 in (25.5.2, Class B).
- Stability at service level: overturning about the toe and sliding with FS 1.5 and 1.5 (IBC 1807.2.3), soil bearing against the allowable; loads combined to ASCE 7-16.
- Lateral earth pressure as an equivalent fluid of 35 psf/ft on the heel side (IBC 1610.1) (at rest, the wall braced); passive 250 psf/ft in front of the toe, the top 12" ignored; friction 0.4.
- Stem and footing at strength level, ACI 318-19: flexure and one-way shear (22.5.5.1 with the bars' ratio), minimum steel 7.6.1.1 and 11.6.1, effective depth 13.3.1.2.
- The slab on the toe side takes all the sliding force at the top of the footing; the slab's own design is not part of this sheet.

Applied Loads	Location	Trib. Width	Dead	Floor Live	Roof Live	Comments
1 - Uniform (PLF)	--	N/A	186	--	218.8	Linked from: Trusses #9, Support 2
2 - Uniform (PLF)	--	N/A	83.3	240.7	--	Linked from: Joists #3, Support 1

Footing #6

PASSED

Cantilevered Retaining Wall 4' retained -- 2' x 10" footing, 8" concrete stem

Level: Basement | f'c 3,000 psi | Fy 60 ksi | bearing 1,500 psf | EFP 35 psf/ft | ACI 318-19 | ASCE 7-16

Controls: Footing thickness 93% used

Soil bearing 1,184 / 372 psf of 1,500

What Loads It

click a box to go to that member

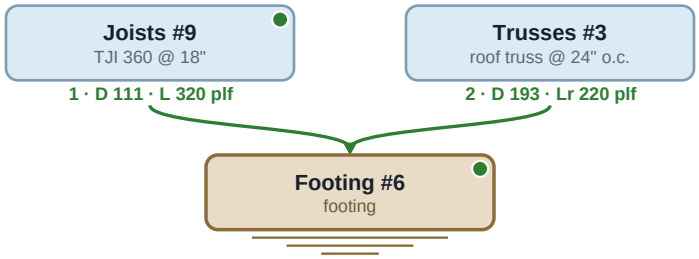

Design

as entered in the retaining wall, the links' loads on the stem

Wall & Soil	
Wall	Cantilevered
Retained height	4'
Wall above the soil	8"
Allowable bearing	1,500 psf
Active pressure	35 psf/ft
Passive pressure	250 psf/ft
Soil density	140 pcf
Footing-soil friction	0.4

Loads	
On the stem (plf)	
Dead	303 plf
Floor live	320 plf
Roof live	220 plf
Surcharge over the heel	40 psf
Surcharge over the toe	40 psf
Required FS	overturning 1.5, sliding 1.5

Stem & Footing	
Stem	8" concrete
Stem vertical bars	#4 @ 12", centered
Stem horizontal bars	#4 @ 12"
Toe	1'
Heel (with the stem)	1'
Footing thickness	10"
Toe bars (bottom)	#5 @ 16"
Heel bars (top)	#5 @ 16"
Cover, bottom / top	3" / 3"
Sliding	a slab takes it

Construction Detail

the wall as built; bars, dowels, hooks and dimensions

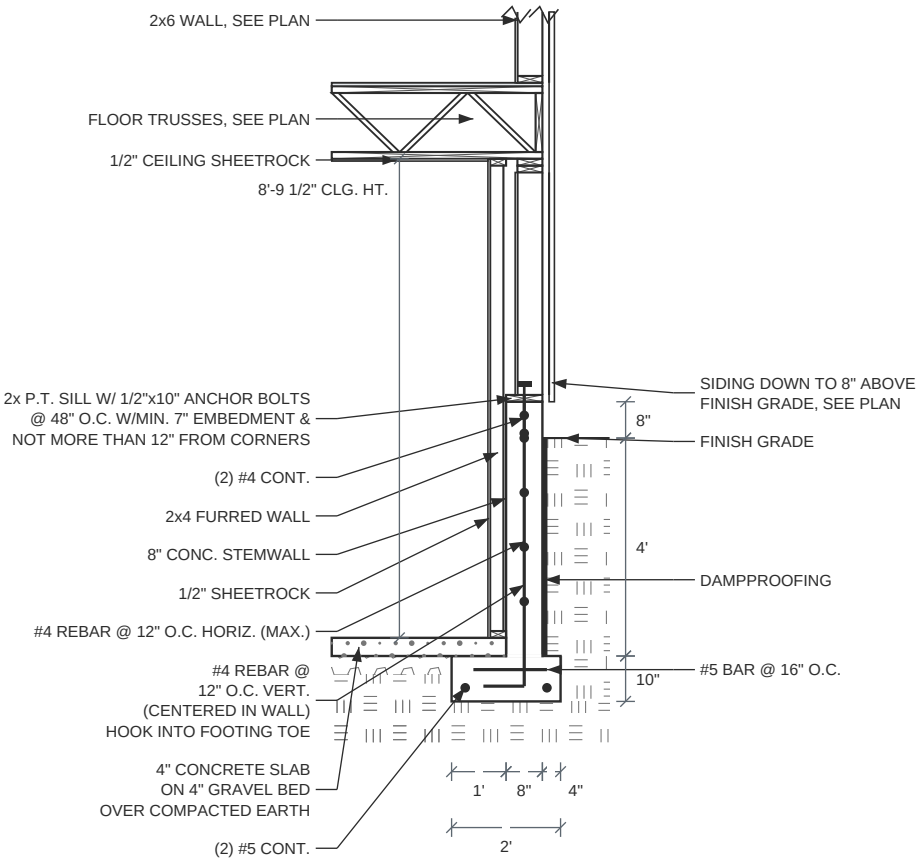

FOOTING #6 - CANTILEVERED FOUNDATION DETAIL

Footing #6 (continued)

Cantilevered Retaining Wall | 4' retained -- 2' x 10" footing, 8" concrete stem

Stability

service loads, ASCE 7 combinations

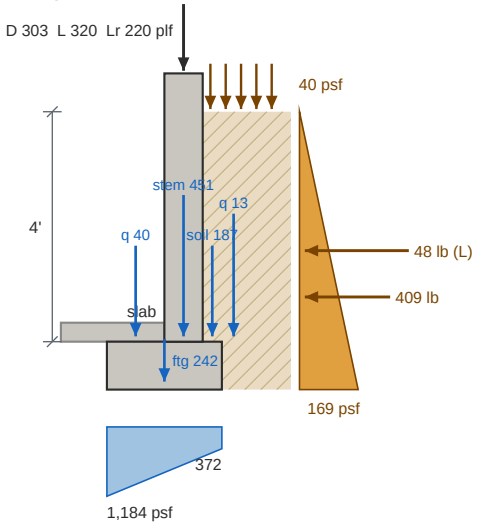

Overturning	Case	lb	Arm ft	lb-ft
HL Act Pres (ab water tbl)	H	409	1.61	659
Surcharge over Heel	L	48	2.42	117
Overturning M = 776 lb-ft				

Resisting	Case	lb	Arm ft	lb-ft
Soil Over HL (ab. water tbl)	H	187	1.83	342
Surcharge Over Heel	L	13	1.83	24
Axial Dead Load on Stem	D	304	1.33	405
Surcharge Over Toe	L	40	0.5	20
Stem Weight(s)	D	451	1.33	602
Footing Weight	D	242	1	242
Resisting M = 1,634 lb-ft				

Overturning FS 2.11 (1.5 required), D+L+H; about the toe at the footing's bottom.
Sliding: the slab takes 457 plf at the top of the footing.
Bearing: 1,556 plf down, 2.1 in off center (middle third); toe 1,184 / heel 372 psf of 1,500 allowed.
Tilt about 0.06 in at the top (subgrade modulus 250 pci).

Load Combination	Overturning FS	Toe (psf)	Heel (psf)	Sliding FS
D+H	2.41	969	214	slab
D+L+H	2.11	1,184	372	slab
D+(Lr/S)+H	2.41	969	434	slab
D+0.75L+0.75(Lr/S)+H	2.17	1,130	498	slab
D+0.75(0.6W)+0.75L+0.75(Lr/S)+H	2.17	1,130	498	slab
D+0.75L+0.75(0.7E)+0.75S+H	2.17	1,130	333	slab

Design Results	Actual	Allowed	Result	Method	Load Combination
Overturning (FS)	2.11	1.50	Passed (71%)	ASD	D+L+H
Sliding (plf into the slab)	457	--	Passed (the slab takes it)	ASD	D+L+H
Soil bearing, toe (psf)	1,184	1,500	Passed (79%)	ASD	D+L+H
Soil bearing, heel (psf)	372	1,500	Passed (25%)	ASD	D+L+H
Stem at the base: bending (lb-ft)	725	3,424	Passed (21%)	LRFD	1.2D+1.6L+0.5(Lr/S)+1.6H
Stem at the base: shear (psi)	10.7	52.9	Passed (20%)	LRFD	1.2D+1.6L+0.5(Lr/S)+1.6H
Toe: bending (lb-ft)	694	6,758	Passed (10%)	LRFD	1.2D+1.6L+0.5(Lr/S)+1.6H
Toe: one-way shear (psi)	8.1	46.9	Passed (17%)	LRFD	1.2D+1.6L+0.5(Lr/S)+1.6H
Heel: bending (lb-ft) (plain concrete)	38	1,753	Passed (2%)	LRFD	0.9D+1.0W+1.6H
Heel: one-way shear (psi)	2.4	43.8	Passed (5%)	LRFD	0.9D+1.0W+1.6H
Footing thickness (in)	10	9.3 min	Passed (93%)	ACI 13.3.1.2	

- Stem dowels #4: develop 13.1 in into the stem (ACI 318-19 25.4.2), standard hook 6 in into the footing (25.4.3), lap 17.1 in (25.5.2, Class B).
- Stability at service level: overturning about the toe and sliding with FS 1.5 and 1.5 (IBC 1807.2.3), soil bearing against the allowable; loads combined to ASCE 7-16.
- Lateral earth pressure as an equivalent fluid of 35 psf/ft on the heel side (IBC 1610.1); passive 250 psf/ft in front of the toe, the top 12" ignored; friction 0.4.
- Stem and footing at strength level, ACI 318-19: flexure and one-way shear (22.5.5.1 with the bars' ratio), minimum steel 7.6.1.1 and 11.6.1, effective depth 13.3.1.2.
- The slab on the toe side takes all the sliding force at the top of the footing; the slab's own design is not part of this sheet.

Applied Loads	Location	Trib. Width	Dead	Floor Live	Roof Live	Comments
1 - Uniform (PLF)	--	N/A	192.7	--	220	Linked from: Trusses #3, Support 2
2 - Uniform (PLF)	--	N/A	110.8	320	--	Linked from: Joists #9, Support 1

Footing #7

PASSED

Restrained Retaining Wall 10' 6" retained -- 2' x 11" footing, 10" concrete stem

Level: Basement | f'c 3,000 psi | Fy 60 ksi | bearing 1,500 psf | at-rest 35 psf/ft | ACI 318-19 | ASCE 7-16

Controls: Soil bearing, toe 99.7% used

Soil bearing 1,495 / 1,495 psf of 1,500

What Loads It

click a box to go to that member

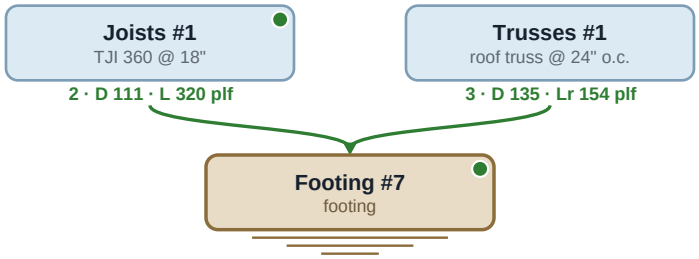

Design

as entered in the retaining wall, the links' loads on the stem

Wall & Soil	
Wall	Restrained at the top
Retained height	10' 6"
Wall above the soil	8"
Top support	10' 6"
Base	fixed
Allowable bearing	1,500 psf
At-rest pressure	35 psf/ft
Passive pressure	250 psf/ft
Soil density	140 pcf
Footing-soil friction	0.4

Loads	
On the stem (plf)	
Dead	246 plf
Floor live	320 plf
Roof live	154 plf
Surcharge over the heel	100 psf (garage slab)
Required FS	overturning 1.5, sliding 1.5

Stem & Footing	
Stem	10" concrete
Stem vertical bars	#5 @ 16", centered
Stem horizontal bars	#4 @ 10"
Toe	9"
Heel (with the stem)	1' 3"
Footing thickness	11"
Toe bars (bottom)	#4 @ 10"
Heel bars (top)	#4 @ 10"
Cover, bottom / top	3" / 3"
Sliding	a slab takes it

Construction Detail

the wall as built; bars, dowels, hooks and dimensions

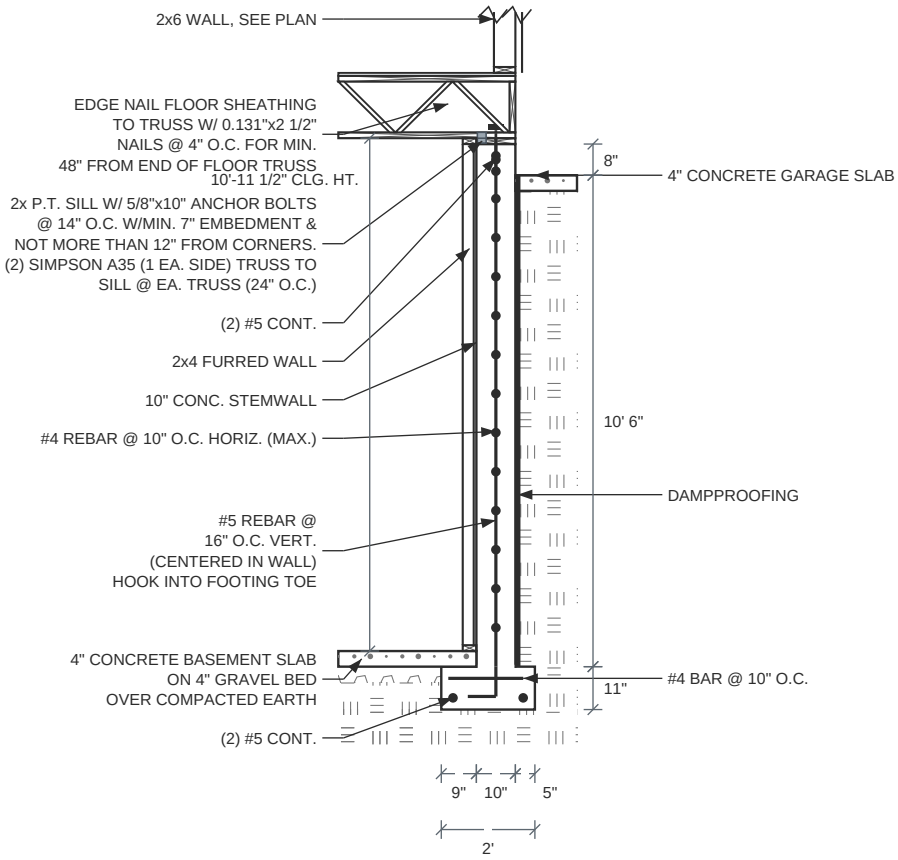

FOOTING #7 - RESTRAINED FOUNDATION DETAIL

Footing #7 (continued)

Restrained Retaining Wall | 10' 6" retained -- 2' x 11" footing, 10" concrete stem

Stability

service loads, ASCE 7 combinations

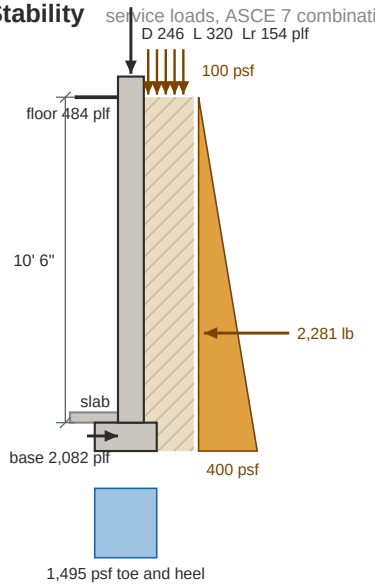

Reactions (service)	
Top support (the floor)	484 plf
Base, to the footing	2,082 plf
Moment into the footing	3,046 lb-ft
Base fixity	fixed
Top support height	10' 6"

Sliding: the slab takes 2,082 plf at the top of the footing.
Bearing: 2,990 plf down, 0 in off center (middle third); toe 1,495 / heel 1,495 psf of 1,500 allowed.

Design Results	Actual	Allowed	Result	Method	Load Combination
Sliding (plf into the slab)	2,082	--	Passed (the slab takes it)	ASD	
Sill anchor bolts, 5/8" @ 14" o.c. (plf)	484	496	Passed (98%)	ASD	H+L, C_D 1
Floor tie, (2) Simpson A35 at each truss @ 24" o.c. (lb)	484	590	Passed (82%)	ASD	H+L, C_D 1
Sheathing nails, 0.131" x 2 1/2" @ 4" o.c. over the first 48 in. of each truss (lb)	969	1,057	Passed (92%)	ASD	H+L, C_D 1
Soil bearing, toe (psf)	1,495	1,500	**Passed (99.7%)**	ASD	every load at full (D+L+Lr+S+H)
Soil bearing, heel (psf)	1,495	1,500	**Passed (99.7%)**	ASD	every load at full (D+L+Lr+S+H)
Stem at the top support: bending (lb-ft)	3	4,993	Passed (0%)	LRFD	1.2D+1.6L+0.5(Lr/S)+1.6H
Stem at the top support: shear (psi)	12.9	51.6	Passed (25%)	LRFD	1.2D+1.6L+0.5(Lr/S)+1.6H
Stem, max. between top and base: bending (lb-ft)	2,233	4,993	Passed (45%)	LRFD	1.2D+1.6L+0.5(Lr/S)+1.6H
Stem, max. between top and base: shear (psi)	0.0	51.6	Passed (0%)	LRFD	1.2D+1.6L+0.5(Lr/S)+1.6H
Stem at the base: bending (lb-ft)	4,873	4,993	Passed (98%)	LRFD	1.2D+1.6L+0.5(Lr/S)+1.6H
Stem at the base: shear (psi)	45.5	51.6	Passed (88%)	LRFD	1.2D+1.6L+0.5(Lr/S)+1.6H
Toe: bending (lb-ft)	465	8,116	Passed (6%)	LRFD	1.2D+1.6L+0.5(Lr/S)+1.6H
Toe: one-way shear (psi)	1.9	45.1	Passed (4%)	LRFD	1.2D+1.6L+0.5(Lr/S)+1.6H
Heel: bending (lb-ft) (plain concrete)	58	2,218	Passed (3%)	LRFD	1.4D
Heel: one-way shear (psi)	2.6	43.8	Passed (6%)	LRFD	1.4D
Footing thickness (in)	11	9.2 min	Passed (84%)	ACI 13.3.1.2	

- Stem dowels #5: develop 16.4 in into the stem (ACI 318-19 25.4.2), standard hook 7.9 in into the footing (25.4.3), lap 21.4 in (25.5.2, Class B).
- Stability at service level: overturning about the toe and sliding with FS 1.5 and 1.5 (IBC 1807.2.3), soil bearing against the allowable; loads combined to ASCE 7-16.
- Lateral earth pressure as an equivalent fluid of 35 psf/ft on the heel side (IBC 1610.1) (at rest, the wall braced); passive 250 psf/ft in front of the toe, the top 12" ignored; friction 0.4.
- Stem and footing at strength level, ACI 318-19: flexure and one-way shear (22.5.5.1 with the bars' ratio), minimum steel 7.6.1.1 and 11.6.1, effective depth 13.3.1.2.
- The slab on the toe side takes all the sliding force at the top of the footing; the slab's own design is not part of this sheet.

Applied Loads	Location	Trib. Width	Dead	Floor Live	Roof Live	Comments
1 - Uniform (PLF)	--	N/A	110.8	320	--	Linked from: Joists #1, Support 2
2 - Uniform (PLF)	--	N/A	135.3	--	154.4	Linked from: Trusses #1, Support 3

Footing #8

PASSED

Restrained Retaining Wall 10' 3" retained -- 2' x 11" footing, 10" concrete stem

Level: Basement | f'c 3,000 psi | Fy 60 ksi | bearing 1,500 psf | at-rest 35 psf/ft | ACI 318-19 | ASCE 7-16

Controls: Sheathing to framing, 0.131" x 2 1/2" @ 4" o.c. over the blocking in the first two bays 94% used

Soil bearing 1,301 / 1,301 psf of 1,500

What Loads It

click a box to go to that member

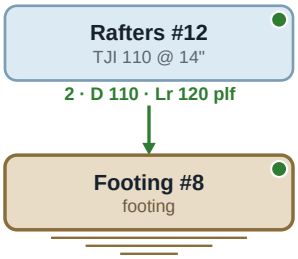

Design

as entered in the retaining wall, the links' loads on the stem

Wall & Soil	
Wall	Restrained at the top
Retained height	10' 3"
Wall above the soil	1"
Top support	10' 4"
Base	fixed
Allowable bearing	1,500 psf
At-rest pressure	35 psf/ft
Passive pressure	250 psf/ft
Soil density	140 pcf
Footing-soil friction	0.4

Loads	
On the stem (plf)	
Dead	110 plf
Roof live	120 plf
Surcharge over the heel	100 psf (garage slab)
Surcharge over the toe	40 psf
Required FS	overturning 1.5, sliding 1.5

Stem & Footing	
Stem	10" concrete
Stem vertical bars	#5 @ 16", centered
Stem horizontal bars	#4 @ 10"
Toe	7 1/2"
Heel (with the stem)	1' 4 1/2"
Footing thickness	11"
Toe bars (bottom)	#4 @ 8"
Heel bars (top)	#4 @ 8"
Cover, bottom / top	3" / 3"
Sliding	a slab takes it

Construction Detail

the wall as built; bars, dowels, hooks and dimensions

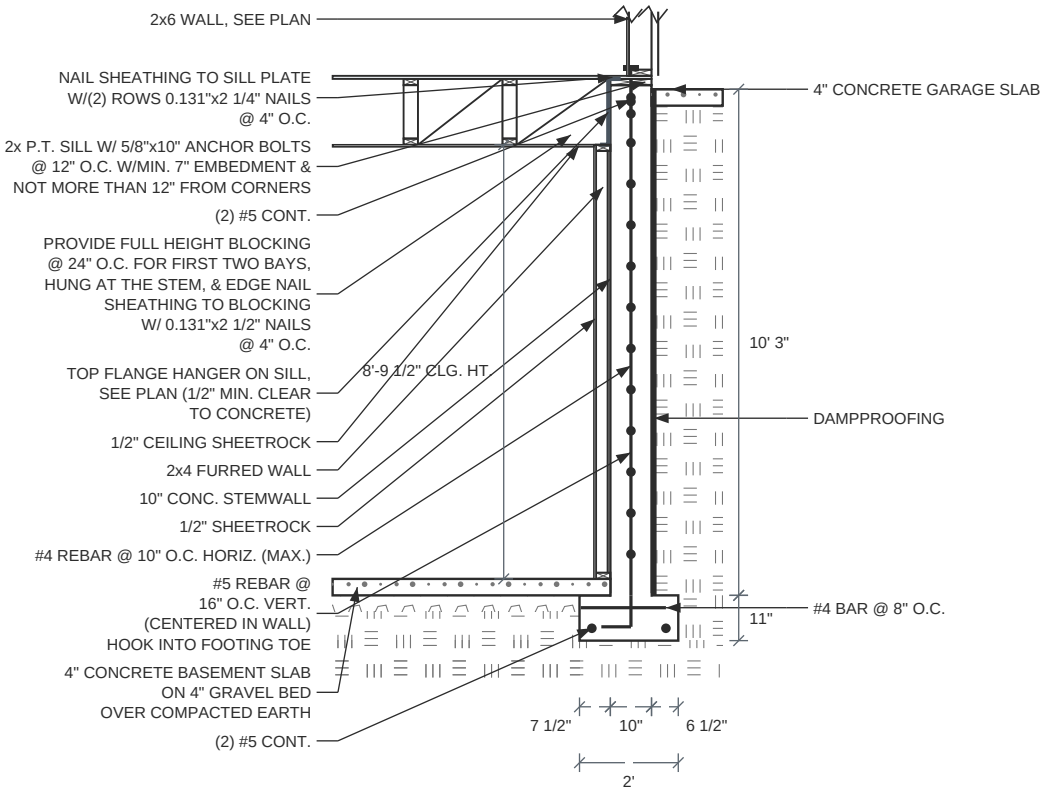

FOOTING #8 - RESTRAINED FOUNDATION DETAIL

Footing #8 (continued)

Restrained Retaining Wall | 10' 3" retained -- 2' x 11" footing, 10" concrete stem

Stability

service loads, ASCE 7 combinations

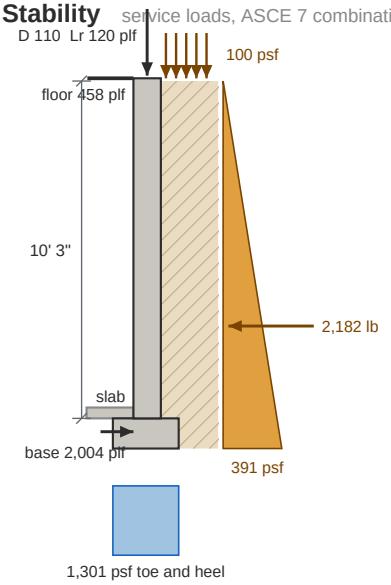

Reactions (service)	
Top support (the floor)	458 plf
Base, to the footing	2,004 plf
Moment into the footing	2,869 lb-ft
Base fixity	fixed
Top support height	10' 4"

Sliding: the slab takes 2,004 plf at the top of the footing.
Bearing: 2,601 plf down, 0 in off center (middle third); toe 1,301 / heel 1,301 psf of 1,500 allowed.

Design Results	Actual	Allowed	Result	Method	Load Combination
Sliding (plf into the slab)	2,004	--	Passed (the slab takes it)	ASD	
Sill anchor bolts, 5/8" @ 12" o.c. (plf)	457	530	Passed (86%)	ASD	H+L, C_D 1
Sheathing to sill, (2) rows 0.131" x 2 1/4" @ 4" o.c. (plf)	457	528	Passed (87%)	ASD	H+L, C_D 1
Sheathing to framing, 0.131" x 2 1/2" @ 4" o.c. over the blocking in the first two bays (lb)	915	969	Passed (94%)	ASD	H+L, C_D 1
Soil bearing, toe (psf)	1,301	1,500	Passed (87%)	ASD	every load at full (D+L+Lr+S+H)
Soil bearing, heel (psf)	1,301	1,500	Passed (87%)	ASD	every load at full (D+L+Lr+S+H)
Stem at the top support: bending (lb-ft)	0	4,993	Passed (0%)	LRFD	1.2D+1.6L+0.5(Lr/S)+1.6H
Stem at the top support: shear (psi)	12.2	51.6	Passed (24%)	LRFD	1.2D+1.6L+0.5(Lr/S)+1.6H
Stem, max. between top and base: bending (lb-ft)	2,099	4,993	Passed (42%)	LRFD	1.2D+1.6L+0.5(Lr/S)+1.6H
Stem, max. between top and base: shear (psi)	0.0	51.6	Passed (0%)	LRFD	1.2D+1.6L+0.5(Lr/S)+1.6H
Stem at the base: bending (lb-ft)	4,591	4,993	Passed (92%)	LRFD	1.2D+1.6L+0.5(Lr/S)+1.6H
Stem at the base: shear (psi)	43.7	51.6	Passed (85%)	LRFD	1.2D+1.6L+0.5(Lr/S)+1.6H
Toe: bending (lb-ft)	280	10,065	Passed (3%)	LRFD	1.4D
Toe: one-way shear (psi)	0.0	48.6	Passed (0%)	LRFD	1.4D
Heel: bending (lb-ft) (plain concrete)	99	2,218	Passed (4%)	LRFD	1.4D
Heel: one-way shear (psi)	3.4	43.8	Passed (8%)	LRFD	1.4D
Footing thickness (in)	11	9.2 min	Passed (84%)	ACI 13.3.1.2	

- Stem dowels #5: develop 16.4 in into the stem (ACI 318-19 25.4.2), standard hook 7.9 in into the footing (25.4.3), lap 21.4 in (25.5.2, Class B).
- Stability at service level: overturning about the toe and sliding with FS 1.5 and 1.5 (IBC 1807.2.3), soil bearing against the allowable; loads combined to ASCE 7-16.
- Lateral earth pressure as an equivalent fluid of 35 psf/ft on the heel side (IBC 1610.1) (at rest, the wall braced); passive 250 psf/ft in front of the toe, the top 12" ignored; friction 0.4.
- Stem and footing at strength level, ACI 318-19: flexure and one-way shear (22.5.5.1 with the bars' ratio), minimum steel 7.6.1.1 and 11.6.1, effective depth 13.3.1.2.
- The slab on the toe side takes all the sliding force at the top of the footing; the slab's own design is not part of this sheet.

Applied Loads	Location	Trib. Width	Dead	Roof Live	Comments
1 - Uniform (PLF)	--	N/A	110.4	120	Linked from: Rafters #12, Support 2

Footing #9

PASSED

Restrained Retaining Wall 3' 6" retained -- 2' x 10" footing, 8" concrete stem

Level: Basement | f'c 3,000 psi | Fy 60 ksi | bearing 1,500 psf | at-rest 35 psf/ft | ACI 318-19 | ASCE 7-16

Controls: Sill anchor bolts, 1/2" @ 38" o.c. 96% used

Soil bearing 572 / 1,306 psf of 1,500

What Loads It

click a box to go to that member

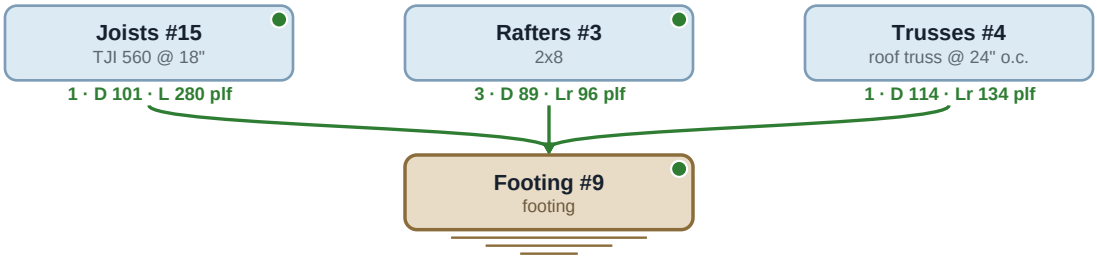

Design

as entered in the retaining wall, the links' loads on the stem

Wall & Soil	
Wall	Restrained at the top
Retained height	3' 6"
Wall above the soil	8"
Top support	3' 6"
Base	pinned
Allowable bearing	1,500 psf
At-rest pressure	35 psf/ft
Passive pressure	250 psf/ft
Soil density	140 pcf
Footing-soil friction	0.4

Loads	
On the stem (plf)	
Dead	303 plf
Floor live	280 plf
Roof live	230 plf
Surcharge over the heel	100 psf (garage slab)
Surcharge over the toe	40 psf
Required FS	overturning 1.5, sliding 1.5

Stem & Footing	
Stem	8" concrete
Stem vertical bars	#4 @ 12", centered
Stem horizontal bars	#4 @ 12"
Toe	8"
Heel (with the stem)	1' 4"
Footing thickness	10"
Toe bars (bottom)	#5 @ 16"
Heel bars (top)	none (plain)
Cover, bottom / top	3" / 3"
Sliding	friction + passive

Construction Detail

the wall as built; bars, dowels, hooks and dimensions

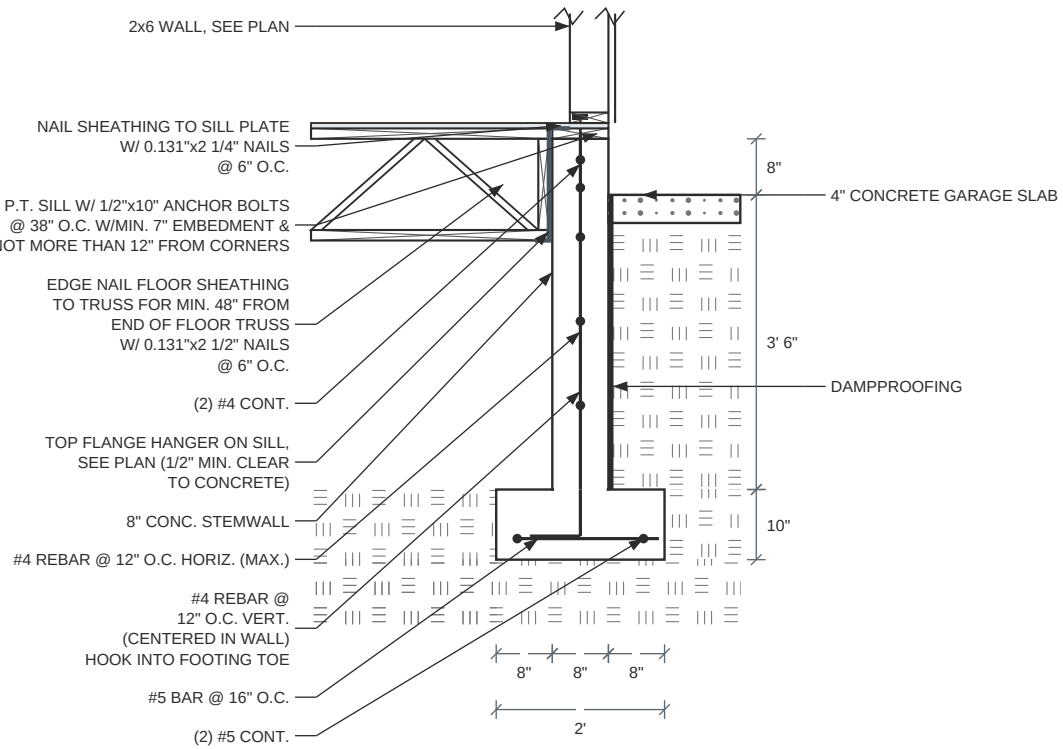

FOOTING #9 - RESTRAINED FOUNDATION DETAIL

Footing #9 (continued)

Restrained Retaining Wall | 3' 6" retained -- 2' x 10" footing, 8" concrete stem

Stability

service loads, ASCE 7 combinations

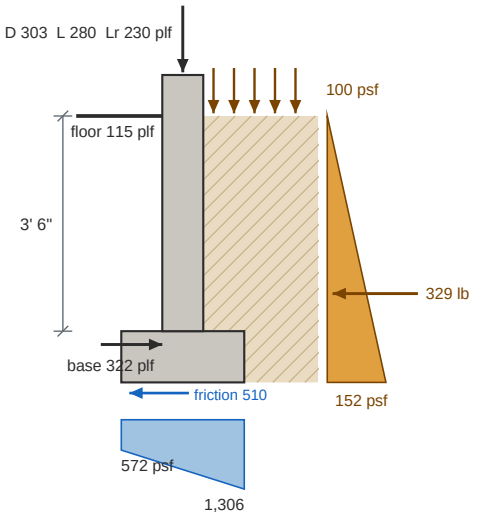

Reactions (service)	
Top support (the floor)	115 plf
Base, to the footing	322 plf
Moment into the footing	0 lb-ft
Base fixity	pinned
Top support height	3' 6"

Sliding FS 1.58 (1.5 required): pushing 322 plf; friction 510 + passive 0 plf.
Bearing: 1,878 plf down, 0 in off center (middle third); toe 572 / heel 1,306 psf of 1,500 allowed.

Design Results	Actual	Allowed	Result	Method	Load Combination
Sliding (FS)	1.58	1.50	Passed (95%)	ASD	
Sill anchor bolts, 1/2" @ 38" o.c. (plf)	115	121	Passed (96%)	ASD	H+L, C_D 1
Sheathing to sill, 0.131" x 2 1/4" @ 6" o.c. (plf)	115	176	Passed (66%)	ASD	H+L, C_D 1
Sheathing to framing, 0.131" x 2 1/2" @ 6" o.c. over the first 48 in. of each truss (lb)	231	704	Passed (33%)	ASD	H+L, C_D 1
Soil bearing, toe (psf)	572	1,500	Passed (38%)	ASD	every load at full (D+L+Lr+S+H)
Soil bearing, heel (psf)	1,306	1,500	Passed (87%)	ASD	every load at full (D+L+Lr+S+H)
Stem at the top support: bending (lb-ft)	0	3,424	Passed (0%)	LRFD	1.2D+1.6L+0.5(Lr/S)+1.6H
Stem at the top support: shear (psi)	3.8	52.9	Passed (7%)	LRFD	1.2D+1.6L+0.5(Lr/S)+1.6H
Stem, max. between top and base: bending (lb-ft)	214	3,424	Passed (6%)	LRFD	1.2D+1.6L+0.5(Lr/S)+1.6H
Stem, max. between top and base: shear (psi)	0.0	52.9	Passed (0%)	LRFD	1.2D+1.6L+0.5(Lr/S)+1.6H
Stem at the base: bending (lb-ft)	0	3,424	Passed (0%)	LRFD	1.2D+1.6L+0.5(Lr/S)+1.6H
Stem at the base: shear (psi)	6.2	52.9	Passed (12%)	LRFD	1.2D+1.6L+0.5(Lr/S)+1.6H
Toe: bending (lb-ft)	135	6,758	Passed (2%)	LRFD	1.2D+1.6(Lr/S)+L+1.6H
Toe: one-way shear (psi)	0.7	46.9	Passed (2%)	LRFD	1.2D+1.6(Lr/S)+L+1.6H
Heel: bending (lb-ft) (plain concrete)	-144	1,753	Passed (8%)	LRFD	1.2D+1.6(Lr/S)+L+1.6H
Heel: one-way shear (psi)	4.2	43.8	Passed (9%)	LRFD	1.2D+1.6(Lr/S)+L+1.6H
Footing thickness (in)	10	9.3 min	Passed (93%)	ACI 13.3.1.2	

- Stem dowels #4: develop 13.1 in into the stem (ACI 318-19 25.4.2), standard hook 6 in into the footing (25.4.3), lap 17.1 in (25.5.2, Class B).
- Stem dowels pinned at the base develop nothing there: the standard hook 3 in clear of the bottom of the footing (IRC R403.1.3), 5.6 in of footing needed, 10 in given.
- Stability at service level: overturning about the toe and sliding with FS 1.5 and 1.5 (IBC 1807.2.3), soil bearing against the allowable; loads combined to ASCE 7-16.
- Lateral earth pressure as an equivalent fluid of 35 psf/ft on the heel side (IBC 1610.1) (at rest, the wall braced); passive 250 psf/ft in front of the toe, the top 12" ignored; friction 0.4.
- Stem and footing at strength level, ACI 318-19: flexure and one-way shear (22.5.5.1 with the bars' ratio), minimum steel 7.6.1.1 and 11.6.1, effective depth 13.3.1.2.

Applied Loads	Location	Trib. Width	Dead	Floor Live	Roof Live	Comments
1 - Uniform (PLF)	--	N/A	89.2	--	96.4	Linked from: Rafters #3, Support 3
2 - Uniform (PLF)	--	N/A	113.5	--	133.6	Linked from: Trusses #4, Support 1
3 - Uniform (PLF)	--	N/A	100.8	280	--	Linked from: Joists #15, Support 1

Footing #10

PASSED

Continuous Footing 1' 4" wide x 8" deep -- Long.(2) #4 Bars, Transv:#4 @12(in) O.C.

Level: Basement | f'c 3,000 psi | rebar Fy 60 ksi | soil 1,500 psf | Concrete stem wall 6" | ACI 318-14

Controls: Soil Bearing Pressure 46% used

Adequacy 54.3% (capacity to spare)

WHAT LOADS IT

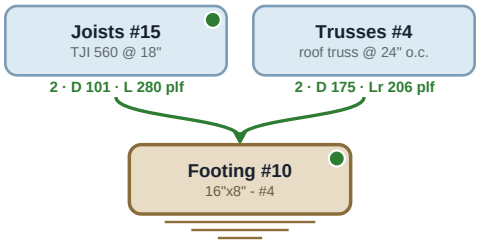

SECTION

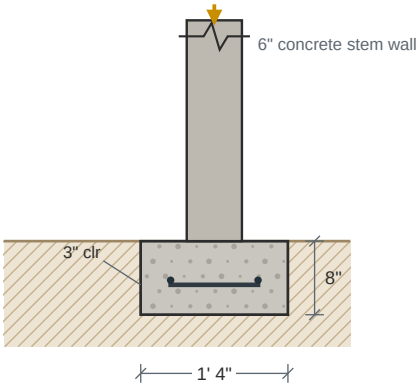

PLAN -- BOTTOM MAT

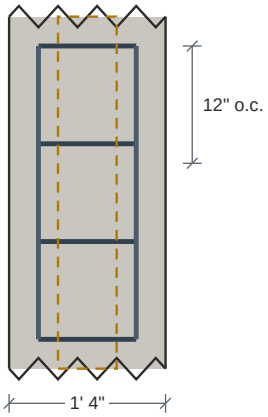

Long.(2) #4 Bars, Transv:#4 @12(in) O.C.

Carrying: Dead 276 plf Floor Live 280 plf Roof Live 206 plf

Design Results	Actual	Allowed	Result	Method	Load Combination
Soil Bearing Pressure (psf)	686	1,500	Passed (46% used)	ASD	D+0.75L+0.75Lr
Moment (ft-lbs/ft)	61	986	Passed (6% used)	LRFD	1.2D+1.6Lr+L
Minimum Thickness (in)	8"	8" min	Meets the minimum	code	ACI 318-14 Ch. 14

Footing Specification

as entered on the footing, and the mat the check selected

Geometry	
Stem wall	concrete
Footing width	1' 4"
Footing depth	8"
Stem wall width	6"
Stem wall height	24"
Stem wall density	145 pcf

Footing Properties	
Steel yield strength	60,000 psi
Concrete strength	3,000 psi
Soil bearing pressure	1,500 psf
Concrete density	145 pcf
Bottom reinf. cover	3"

Soil Properties	
Soil depth above footing	0

Reinforcement	
Bottom mat	Long.(2) #4 Bars, Transv:#4 @12(in) O.C.
Transverse	#4 @ 12" o.c.
Longitudinal	(2) #4
Selected for	moment and minimum steel
Plain concrete (no reinforcing)	No

- Soil bearing is checked at service level (ASD) and includes the footing's own weight and the stem wall's; shear, moment at strength level (LRFD), ACI 318-14, loads combined to ASCE 7-16.
- 8 in thick with 3 in cover, the #4 bottom bars have 4.75 in of effective depth -- under the 6 in ACI 318-14 13.3.1.2 asks to count them. Designed as plain concrete (Ch. 14, phi 0.60, the bottom 2 in not counted); the bars are nominal. The plain section carries it..

Applied Loads	Location	Trib. Width	Dead	Floor Live	Roof Live	Comments
1 - Uniform (PLF)	--	N/A	100.8	280	--	Linked from: Joists #15, Support 2
2 - Uniform (PLF)	--	N/A	175.5	--	206.4	Linked from: Trusses #4, Support 2

Footing #11

PASSED

Continuous Footing 1' 4" wide x 10" deep -- Long.(2) #4 Bars, Transv:#4 @10(in) O.C.

Level: Basement | f'c 3,000 psi | rebar Fy 60 ksi | soil 1,500 psf | Concrete stem wall 6" | ACI 318-14

Controls: Soil Bearing Pressure 47% used

Adequacy 53.2% (capacity to spare)

WHAT LOADS IT

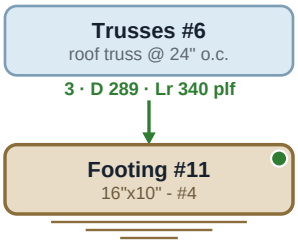

SECTION

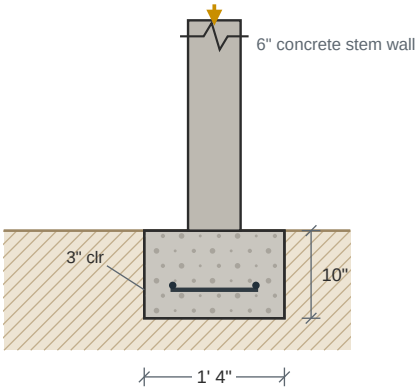

PLAN -- BOTTOM MAT

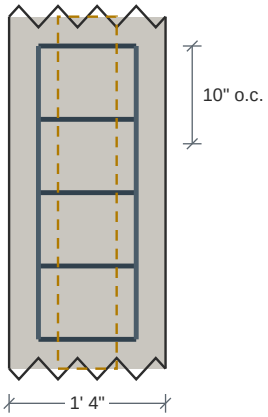

Long.(2) #4 Bars, Transv:#4 @10(in) O.C.

Carrying: Dead 289 plf Roof Live 340 plf

Design Results	Actual	Allowed	Result	Method	Load Combination
Soil Bearing Pressure (psf)	701	1,500	Passed (47% used)	ASD	D+Lr
One-Way Shear (lbs/ft)	0	6,655	Passed (0% used)	LRFD	1.2D+1.6Lr+L
Moment (ft-lbs/ft)	58	7,036	Passed (1% used)	LRFD	1.2D+1.6Lr+L
Depth Above Bars (in)	6 3/4"	6" min	Meets the minimum	code	ACI 318-14 13.3.1.2

Footing Specification

as entered on the footing, and the mat the check selected

Geometry	
Stem wall	concrete
Footing width	1' 4"
Footing depth	10"
Stem wall width	6"
Stem wall height	24"
Stem wall density	145 pcf

Footing Properties	
Steel yield strength	60,000 psi
Concrete strength	3,000 psi
Soil bearing pressure	1,500 psf
Concrete density	145 pcf
Bottom reinf. cover	3"

Soil Properties	
Soil depth above footing	0

Reinforcement	
Bottom mat	Long.(2) #4 Bars, Transv:#4 @10(in) O.C.
Transverse	#4 @ 10" o.c.
Longitudinal	(2) #4
Selected for	moment and minimum steel
Plain concrete (no reinforcing)	No

- Soil bearing is checked at service level (ASD) and includes the footing's own weight and the stem wall's; shear, moment at strength level (LRFD), ACI 318-14, loads combined to ASCE 7-16.
- Reinforcement is selected for the moment and for minimum steel (ACI 318-14: 0.0018 Ag for Grade 60), at no more than 3h or 18 in.

Applied Loads	Location	Trib. Width	Dead	Roof Live	Comments
1 - Uniform (PLF)	--	N/A	289	340	Linked from: Trusses #6, Support 3

Footing #12

PASSED

Continuous Footing 1' 4" wide x 10" deep -- Long.(2) #4 Bars, Transv:#4 @10(in) O.C.

Level: Basement | f'c 3,000 psi | rebar Fy 60 ksi | soil 1,500 psf | Concrete stem wall 6" | ACI 318-14

Controls: Soil Bearing Pressure 47% used

Adequacy 53.2% (capacity to spare)

WHAT LOADS IT

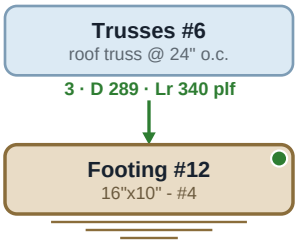

SECTION

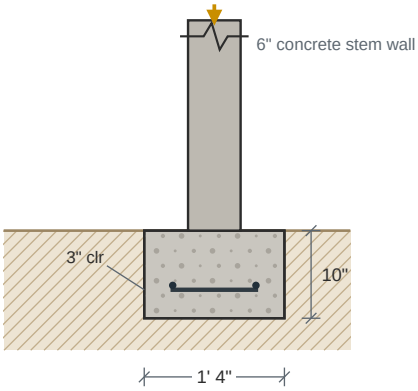

PLAN -- BOTTOM MAT

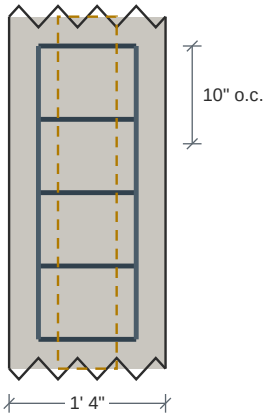

Long.(2) #4 Bars, Transv:#4 @10(in) O.C.

Carrying: Dead 289 plf Roof Live 340 plf

Design Results	Actual	Allowed	Result	Method	Load Combination
Soil Bearing Pressure (psf)	701	1,500	Passed (47% used)	ASD	D+Lr
One-Way Shear (lbs/ft)	0	6,655	Passed (0% used)	LRFD	1.2D+1.6Lr+L
Moment (ft-lbs/ft)	58	7,036	Passed (1% used)	LRFD	1.2D+1.6Lr+L
Depth Above Bars (in)	6 3/4"	6" min	Meets the minimum	code	ACI 318-14 13.3.1.2

Footing Specification

as entered on the footing, and the mat the check selected

Geometry	
Stem wall	concrete
Footing width	1' 4"
Footing depth	10"
Stem wall width	6"
Stem wall height	24"
Stem wall density	145 pcf

Footing Properties	
Steel yield strength	60,000 psi
Concrete strength	3,000 psi
Soil bearing pressure	1,500 psf
Concrete density	145 pcf
Bottom reinf. cover	3"

Soil Properties	
Soil depth above footing	0

Reinforcement	
Bottom mat	Long.(2) #4 Bars, Transv:#4 @10(in) O.C.
Transverse	#4 @ 10" o.c.
Longitudinal	(2) #4
Selected for	moment and minimum steel
Plain concrete (no reinforcing)	No

- Soil bearing is checked at service level (ASD) and includes the footing's own weight and the stem wall's; shear, moment at strength level (LRFD), ACI 318-14, loads combined to ASCE 7-16.
- Reinforcement is selected for the moment and for minimum steel (ACI 318-14: 0.0018 Ag for Grade 60), at no more than 3h or 18 in.

Applied Loads	Location	Trib. Width	Dead	Roof Live	Comments
1 - Uniform (PLF)	--	N/A	289	340	Linked from: Trusses #6, Support 3

Footing - WD-#2

PASSED

Continuous Footing 2' wide x 10" deep -- Long.(3) #4 Bars, Transv:#4 @10(in) O.C.

Level: Basement | f'c 3,000 psi | rebar Fy 60 ksi | soil 1,500 psf | wood framed wall on it | ACI 318-14

Controls: Soil Bearing Pressure 61% used

Adequacy 38.7% (capacity to spare)

What Loads It

click a box to go to that member

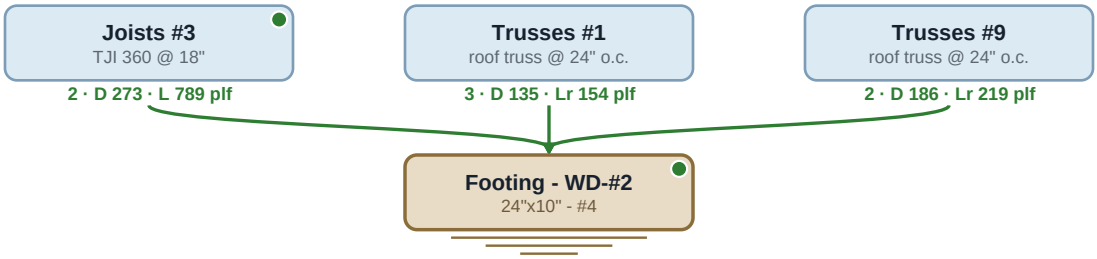

SECTION

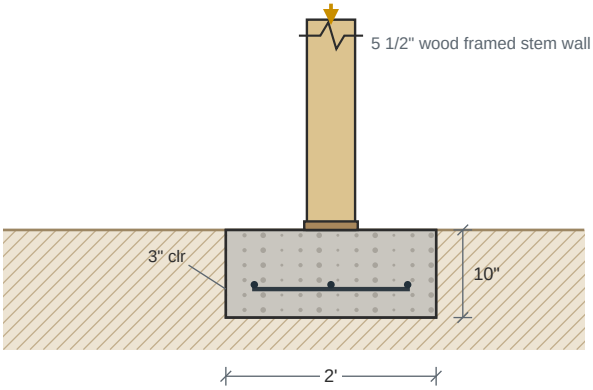

PLAN -- BOTTOM MAT

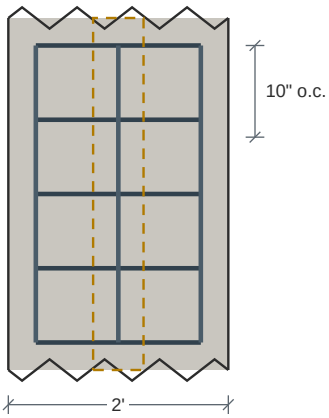

Long.(3) #4 Bars, Transv:#4 @10(in) O.C.

Carrying: Dead 594 plf Roof Live 373 plf Floor Live 789 plf

Design Results	Actual	Allowed	Result	Method	Load Combination
Soil Bearing Pressure (psf)	920	1,500	Passed (61% used)	ASD	D+0.75L+0.75Lr
One-Way Shear (lbs/ft)	225	6,655	Passed (3% used)	LRFD	1.2D+1.6L+0.5Lr
Moment (ft-lbs/ft)	424	7,036	Passed (6% used)	LRFD	1.2D+1.6L+0.5Lr
Depth Above Bars (in)	6 3/4"	6" min	Meets the minimum	code	ACI 318-14 13.3.1.2

Footing Specification

as entered on the footing, and the mat the check selected

Geometry	
Stem wall	wood framed wall
Footing width	2'
Footing depth	10"
Stem weight in the check	5 1/2" x 24" at 145 pcf (conservative for a wood wall)

Footing Properties	
Steel yield strength	60,000 psi
Concrete strength	3,000 psi
Soil bearing pressure	1,500 psf
Concrete density	145 pcf
Bottom reinf. cover	3"

Soil Properties	
Soil depth above footing	0

Reinforcement	
Bottom mat	Long.(3) #4 Bars, Transv:#4 @10(in) O.C.
Transverse	#4 @ 10" o.c.
Longitudinal	(3) #4
Selected for	moment and minimum steel
Plain concrete (no reinforcing)	No

- Soil bearing is checked at service level (ASD) and includes the footing's own weight and the stem wall's; shear, moment at strength level (LRFD), ACI 318-14, loads combined to ASCE 7-16.
- Reinforcement is selected for the moment and for minimum steel (ACI 318-14: 0.0018 Ag for Grade 60), at no more than 3h or 18 in.

Applied Loads	Location	Trib. Width	Dead	Floor Live	Roof Live	Comments
1 - Uniform (PLF)	--	N/A	135.3	--	154.4	Linked from: Trusses #1, Support 3
2 - Uniform (PLF)	--	N/A	273.1	788.8	--	Linked from: Joists #3, Support 2

Footing - WD-#2 (continued)

Continuous Footing | 2' wide x 10" deep -- Long.(3) #4 Bars, Transv:#4 @10(in) O.C.

Applied Loads	Location	Trib. Width	Dead	Floor Live	Roof Live	Comments
3 - Uniform (PLF)	--	N/A	186	--	218.8	Linked from: Trusses #9, Support 2

Footing - WD-#3

PASSED

Continuous Footing 1' 4" wide x 10" deep -- Long.(2) #4 Bars, Transv:#4 @10(in) O.C.

Level: Basement | f'c 3,000 psi | rebar Fy 60 ksi | soil 1,500 psf | wood framed wall on it | ACI 318-14

Controls: Soil Bearing Pressure 85% used

Adequacy 14.8% (capacity to spare)

WHAT LOADS IT

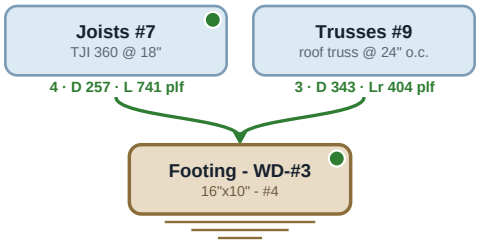

SECTION

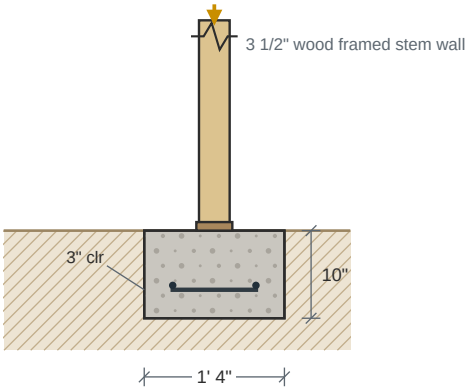

PLAN -- BOTTOM MAT

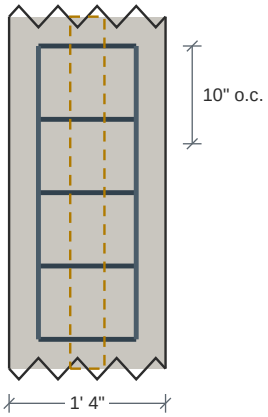

Long.(2) #4 Bars, Transv:#4 @10(in) O.C.

Carrying: Dead 600 plf Floor Live 741 plf Roof Live 404 plf

Design Results	Actual	Allowed	Result	Method	Load Combination
Soil Bearing Pressure (psf)	1,278	1,500	Passed (85% used)	ASD	D+0.75L+0.75Lr
One-Way Shear (lbs/ft)	0	6,655	Passed (0% used)	LRFD	1.2D+1.6L+0.5Lr
Moment (ft-lbs/ft)	279	7,036	Passed (4% used)	LRFD	1.2D+1.6L+0.5Lr
Depth Above Bars (in)	6 3/4"	6" min	Meets the minimum	code	ACI 318-14 13.3.1.2

Footing Specification

as entered on the footing, and the mat the check selected

Geometry	
Stem wall	wood framed wall
Footing width	1' 4"
Footing depth	10"
Stem weight in the check	3 1/2" x 24" at 145 pcf (conservative for a wood wall)

Footing Properties	
Steel yield strength	60,000 psi
Concrete strength	3,000 psi
Soil bearing pressure	1,500 psf
Concrete density	145 pcf
Bottom reinf. cover	3"

Soil Properties	
Soil depth above footing	0

Reinforcement	
Bottom mat	Long.(2) #4 Bars, Transv:#4 @10(in) O.C.
Transverse	#4 @ 10" o.c.
Longitudinal	(2) #4
Selected for	moment and minimum steel
Plain concrete (no reinforcing)	No

- Soil bearing is checked at service level (ASD) and includes the footing's own weight and the stem wall's; shear, moment at strength level (LRFD), ACI 318-14, loads combined to ASCE 7-16.
- Reinforcement is selected for the moment and for minimum steel (ACI 318-14: 0.0018 Ag for Grade 60), at no more than 3h or 18 in.

Applied Loads	Location	Trib. Width	Dead	Floor Live	Roof Live	Comments
1 - Uniform (PLF)	--	N/A	343	--	403.5	Linked from: Trusses #9, Support 3
2 - Uniform (PLF)	--	N/A	256.6	741.2	--	Linked from: Joists #7, Support 4

SpotFtg Bm #1-2

PASSED

Spot Footing 2' 6" x 2' 6" x 10" deep -- Bot. (3) #4 each way

Controls: Soil Bearing Pressure 72% used
Adequacy 27.8% (capacity to spare)

Level: Basement | f'c 3,000 psi | rebar Fy 60 ksi | soil 1,500 psf | in a foundation wall (3 1/2" x 24" stem, typed) | on it: concrete pier 5 1/2 x 5 1/2, as set on the pad | ACI 318-14

WHAT LOADS IT

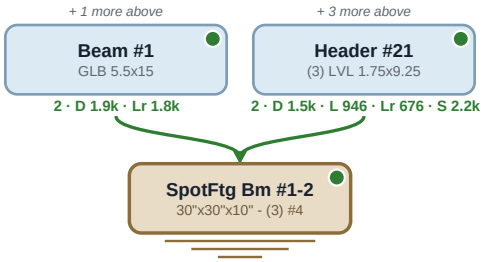

ELEVATION IN THE FOUNDATION WALL

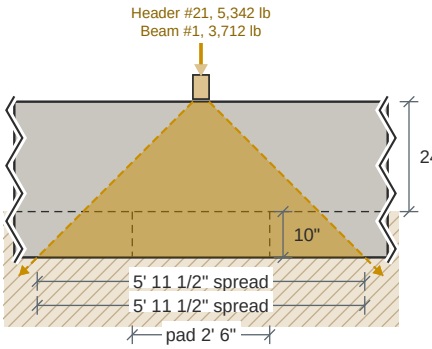

Concrete under the loads: bearing 18% used; where they overlap 38% (ACI 318-14 22.8)

PLAN -- BOTTOM MAT

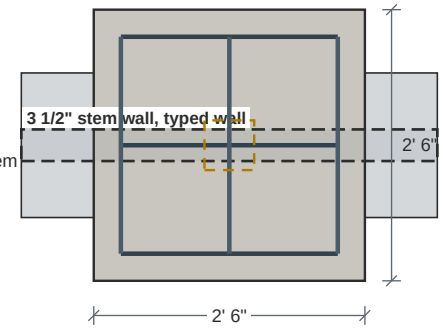

Bot. (3) #4 each way

Carrying: Dead 3,425 lb Roof Live 2,508 lb Floor Live 946 lb Snow 2,174 lb

Design Results	Actual	Allowed	Result	Method	Load Combination
Soil Bearing Pressure (psf)	1,083	1,500	Passed (72% used)	ASD	D+0.75L+0.75Lr
One-Way Shear X (lbs)	1,814	15,405	Passed (12% used)	LRFD	1.2D+1.6Lr+L
One-Way Shear Y (lbs)	1,814	15,405	Passed (12% used)	LRFD	1.2D+1.6Lr+L
Two-Way Shear (lbs)	7,619	51,267	Passed (15% used)	LRFD	1.2D+1.6Lr+L
Moment X (ft-lbs)	1,890	16,240	Passed (12% used)	LRFD	1.2D+1.6Lr+L
Moment Y (ft-lbs)	1,890	16,240	Passed (12% used)	LRFD	1.2D+1.6Lr+L
Crushing (lbs)	9,070	100,279	Passed (9% used)	LRFD	1.2D+1.6Lr+L
Depth Above Bars (in)	6 3/4"	6" min	Meets the minimum	code	ACI 318-14 13.3.1.2

Footing Specification

as entered on the footing, and the mat the check selected

Geometry	
Shape	Square
Bears on it	concrete pier 5 1/2 x 5 1/2, as set on the pad
Bearing size	5 1/2" x 5 1/2"
Footing width	2' 6"
Footing length	2' 6"
Footing depth	10"

Footing Properties	
Steel yield strength	60,000 psi
Concrete strength	3,000 psi
Soil bearing pressure	1,500 psf
Concrete density	145 pcf
Bottom reinf. cover	3"

Soil Properties	
Soil depth above footing	0

Reinforcement	
Bottom mat	Bot. (3) #4 each way
Bars along the width	(3) #4
Bars along the length	(3) #4
Selected for	moment and minimum steel
Plain concrete (no reinforcing)	No

- Soil bearing is checked at service level (ASD) and includes the footing's own weight; shear, moment and crushing at strength level (LRFD), ACI 318-14, loads combined to ASCE 7-16.
- Reinforcement is selected for the moment and for minimum steel (ACI 318-14: 0.0018 Ag for Grade 60), at no more than 3h or 18 in.

Applied Loads	Location	Trib. Width	Dead	Floor Live	Roof Live	Snow	Comments
1 - Point (lb)	--	N/A	1,880	--	1,832	--	Linked from: Beam #1, Support 2
2 - Point (lb)	--	N/A	1,545	946.2	675.9	2,174	Linked from: Header #21, Support 2

SpotFtg Bm #2-1

PASSED

Spot Footing 2' 6" x 2' 6" x 10" deep -- Bot. (3) #4 each way

Level: Basement | f'c 3,000 psi | rebar Fy 60 ksi | soil 1,500 psf | on it: Beam #2 in a beam pocket in a 2x6 wall, on a 6x6 post in it | ACI 318-14

Controls: Soil Bearing Pressure 95% used
Adequacy 5.4% (capacity to spare)

WHAT LOADS IT

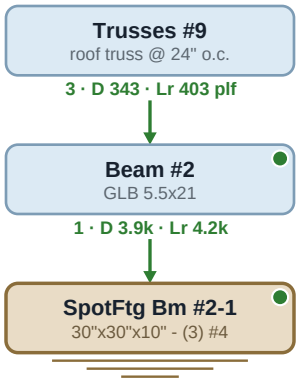

SECTION

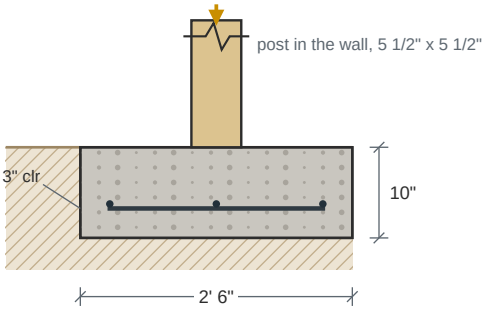

PLAN -- BOTTOM MAT

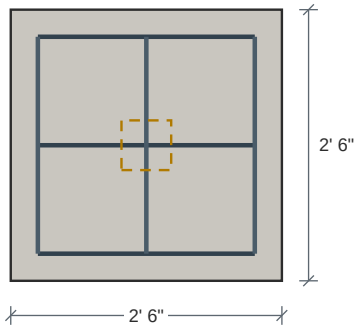

Bot. (3) #4 each way

Carrying: Dead 3,878 lb Roof Live 4,237 lb

Design Results	Actual	Allowed	Result	Method	Load Combination
Soil Bearing Pressure (psf)	1,419	1,500	Passed (95% used)	ASD	D+Lr
One-Way Shear X (lbs)	2,286	15,405	Passed (15% used)	LRFD	1.2D+1.6Lr+L
One-Way Shear Y (lbs)	2,286	15,405	Passed (15% used)	LRFD	1.2D+1.6Lr+L
Two-Way Shear (lbs)	9,603	51,267	Passed (19% used)	LRFD	1.2D+1.6Lr+L
Moment X (ft-lbs)	2,948	16,240	Passed (18% used)	LRFD	1.2D+1.6Lr+L
Moment Y (ft-lbs)	2,948	16,240	Passed (18% used)	LRFD	1.2D+1.6Lr+L
Crushing (lbs)	11,432	100,279	Passed (11% used)	LRFD	1.2D+1.6Lr+L
Depth Above Bars (in)	6 3/4"	6" min	Meets the minimum	code	ACI 318-14 13.3.1.2

Footing Specification

as entered on the footing, and the mat the check selected

Geometry	
Shape	Square
Bears on it	Beam #2 in a beam pocket in a 2x6 wall, on a 6x6 post in it
Bearing size	5 1/2" x 5 1/2"
Footing width	2' 6"
Footing length	2' 6"
Footing depth	10"

Footing Properties	
Steel yield strength	60,000 psi
Concrete strength	3,000 psi
Soil bearing pressure	1,500 psf
Concrete density	145 pcf
Bottom reinf. cover	3"

Soil Properties	
Soil depth above footing	0

Reinforcement	
Bottom mat	Bot. (3) #4 each way
Bars along the width	(3) #4
Bars along the length	(3) #4
Selected for	moment and minimum steel
Plain concrete (no reinforcing)	No

- Soil bearing is checked at service level (ASD) and includes the footing's own weight; shear, moment and crushing at strength level (LRFD), ACI 318-14, loads combined to ASCE 7-16.
- Reinforcement is selected for the moment and for minimum steel (ACI 318-14: 0.0018 Ag for Grade 60), at no more than 3h or 18 in.
- Wood on the concrete: the wood's own bearing -- a sill or plate in Fc-perp, a post's end grain in Fc -- can govern below the concrete value; it is not checked on this sheet.

Applied Loads	Location	Trib. Width	Dead	Roof Live	Comments
1 - Point (lb)	--	N/A	3,878	4,237	Linked from: Beam #2, Support 1

SpotFtg Bm #2-2

PASSED

Spot Footing 2' 6" x 2' 6" x 10" deep -- Bot. (3) #4 each way

Controls: Soil Bearing Pressure 95% used
Adequacy 5.4% (capacity to spare)

Level: Basement | f'c 3,000 psi | rebar Fy 60 ksi | soil 1,500 psf | on it: Beam #2 in a beam pocket in a 2x6 wall, on a 6x6 post in it | ACI 318-14

WHAT LOADS IT

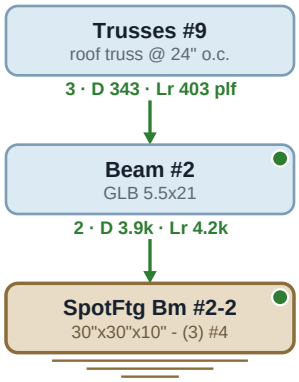

SECTION

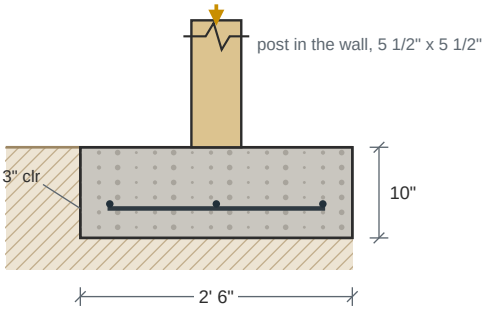

PLAN -- BOTTOM MAT

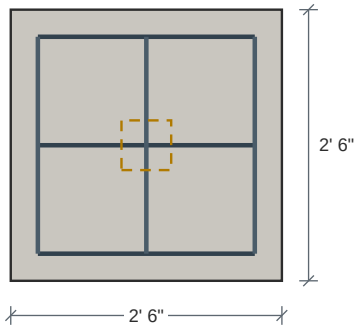

Bot. (3) #4 each way

Carrying: Roof Live 4,237 lb Dead 3,878 lb

Design Results	Actual	Allowed	Result	Method	Load Combination
Soil Bearing Pressure (psf)	1,419	1,500	Passed (95% used)	ASD	D+Lr
One-Way Shear X (lbs)	2,286	15,405	Passed (15% used)	LRFD	1.2D+1.6Lr+L
One-Way Shear Y (lbs)	2,286	15,405	Passed (15% used)	LRFD	1.2D+1.6Lr+L
Two-Way Shear (lbs)	9,603	51,267	Passed (19% used)	LRFD	1.2D+1.6Lr+L
Moment X (ft-lbs)	2,948	16,240	Passed (18% used)	LRFD	1.2D+1.6Lr+L
Moment Y (ft-lbs)	2,948	16,240	Passed (18% used)	LRFD	1.2D+1.6Lr+L
Crushing (lbs)	11,432	100,279	Passed (11% used)	LRFD	1.2D+1.6Lr+L
Depth Above Bars (in)	6 3/4"	6" min	Meets the minimum	code	ACI 318-14 13.3.1.2

Footing Specification

as entered on the footing, and the mat the check selected

Geometry	
Shape	Square
Bears on it	Beam #2 in a beam pocket in a 2x6 wall, on a 6x6 post in it
Bearing size	5 1/2" x 5 1/2"
Footing width	2' 6"
Footing length	2' 6"
Footing depth	10"

Footing Properties	
Steel yield strength	60,000 psi
Concrete strength	3,000 psi
Soil bearing pressure	1,500 psf
Concrete density	145 pcf
Bottom reinf. cover	3"

Soil Properties	
Soil depth above footing	0

Reinforcement	
Bottom mat	Bot. (3) #4 each way
Bars along the width	(3) #4
Bars along the length	(3) #4
Selected for	moment and minimum steel
Plain concrete (no reinforcing)	No

- Soil bearing is checked at service level (ASD) and includes the footing's own weight; shear, moment and crushing at strength level (LRFD), ACI 318-14, loads combined to ASCE 7-16.
- Reinforcement is selected for the moment and for minimum steel (ACI 318-14: 0.0018 Ag for Grade 60), at no more than 3h or 18 in.
- Wood on the concrete: the wood's own bearing -- a sill or plate in Fc-perp, a post's end grain in Fc -- can govern below the concrete value; it is not checked on this sheet.

Applied Loads	Location	Trib. Width	Dead	Roof Live	Comments
1 - Point (lb)	--	N/A	3,878	4,237	Linked from: Beam #2, Support 2

SpotFtg Bm #3-1

PASSED

Spot Footing 2' x 2' x 10" deep -- Bot. (3) #4 each way

Level: Basement | f'c 3,000 psi | rebar Fy 60 ksi | soil 1,500 psf | on it: concrete pier 7 1/2 x 7 1/2, as set on the pad | ACI 318-14

Controls: Soil Bearing Pressure 53% used
Adequacy 46.7% (capacity to spare)

WHAT LOADS IT

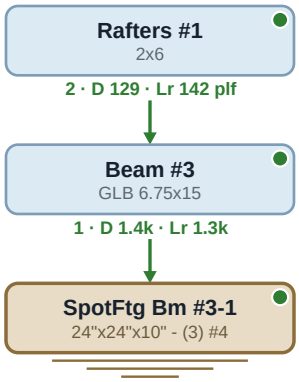

SECTION

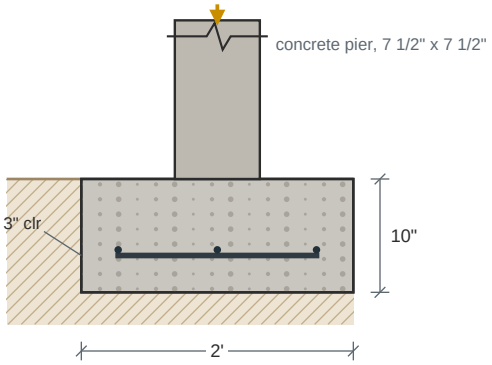

PLAN -- BOTTOM MAT

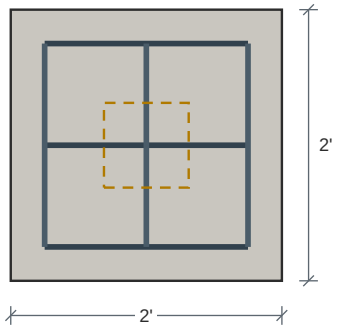

Bot. (3) #4 each way

Carrying: Roof Live 1,310 lb Dead 1,405 lb

Design Results	Actual	Allowed	Result	Method	Load Combination
Soil Bearing Pressure (psf)	800	1,500	Passed (53% used)	ASD	D+Lr
One-Way Shear X (lbs)	315	12,324	Passed (3% used)	LRFD	1.2D+1.6Lr+L
One-Way Shear Y (lbs)	315	12,324	Passed (3% used)	LRFD	1.2D+1.6Lr+L
Two-Way Shear (lbs)	2,495	59,811	Passed (4% used)	LRFD	1.2D+1.6Lr+L
Moment X (ft-lbs)	447	16,081	Passed (3% used)	LRFD	1.2D+1.6Lr+L
Moment Y (ft-lbs)	447	16,081	Passed (3% used)	LRFD	1.2D+1.6Lr+L
Crushing (lbs)	3,782	186,469	Passed (2% used)	LRFD	1.2D+1.6Lr+L
Depth Above Bars (in)	6 3/4"	6" min	Meets the minimum	code	ACI 318-14 13.3.1.2

Footing Specification

as entered on the footing, and the mat the check selected

Geometry	
Shape	Square
Bears on it	concrete pier 7 1/2 x 7 1/2, as set on the pad
Bearing size	7 1/2" x 7 1/2"
Footing width	2'
Footing length	2'
Footing depth	10"

Footing Properties	
Steel yield strength	60,000 psi
Concrete strength	3,000 psi
Soil bearing pressure	1,500 psf
Concrete density	145 pcf
Bottom reinf. cover	3"

Soil Properties and Post	
Soil depth above footing	0
Post	8x8 post
Post base	fabricated
Cap	(1) HL55, p. 315

Reinforcement	
Bottom mat	Bot. (3) #4 each way
Bars along the width	(3) #4
Bars along the length	(3) #4
Selected for	moment and minimum steel
Plain concrete (no reinforcing)	No

- Soil bearing is checked at service level (ASD) and includes the footing's own weight; shear, moment and crushing at strength level (LRFD), ACI 318-14, loads combined to ASCE 7-16.
- Reinforcement is selected for the moment and for minimum steel (ACI 318-14: 0.0018 Ag for Grade 60), at no more than 3h or 18 in.

Applied Loads	Location	Trib. Width	Dead	Roof Live	Comments
1 - Point (lb)	--	N/A	1,405	1,310	Linked from: Beam #3, Support 1

SpotFtg Bm #3-2

Spot Footing 2' x 2' x 10" deep -- Bot. (3) #4 each way

Level: Basement | f'c 3,000 psi | rebar Fy 60 ksi | soil 1,500 psf | on it: 8x8 post | ACI 318-14

PASSED

Controls: Soil Bearing Pressure 82% used

Adequacy 17.8% (capacity to spare)

WHAT LOADS IT

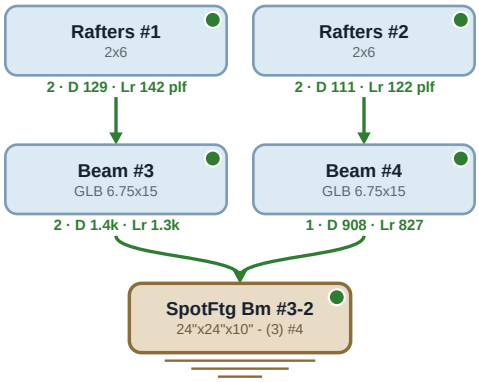

SECTION

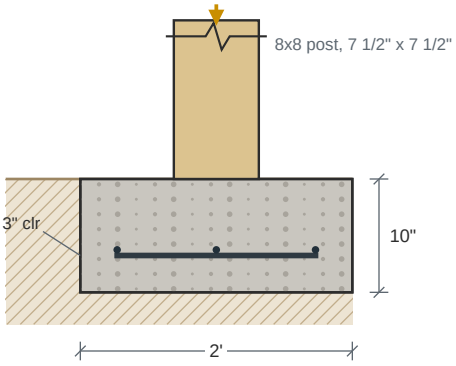

PLAN -- BOTTOM MAT

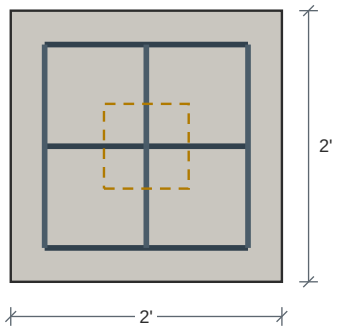

Bot. (3) #4 each way

Carrying: Dead 2,313 lb Roof Live 2,137 lb

Design Results	Actual	Allowed	Result	Method	Load Combination
Soil Bearing Pressure (psf)	1,233	1,500	Passed (82% used)	ASD	D+Lr
One-Way Shear X (lbs)	516	12,324	Passed (4% used)	LRFD	1.2D+1.6Lr+L
One-Way Shear Y (lbs)	516	12,324	Passed (4% used)	LRFD	1.2D+1.6Lr+L
Two-Way Shear (lbs)	4,087	59,811	Passed (7% used)	LRFD	1.2D+1.6Lr+L
Moment X (ft-lbs)	1,102	16,081	Passed (7% used)	LRFD	1.2D+1.6Lr+L
Moment Y (ft-lbs)	1,102	16,081	Passed (7% used)	LRFD	1.2D+1.6Lr+L
Crushing (lbs)	6,194	186,469	Passed (3% used)	LRFD	1.2D+1.6Lr+L
Depth Above Bars (in)	6 3/4"	6" min	Meets the minimum	code	ACI 318-14 13.3.1.2

Footing Specification

as entered on the footing, and the mat the check selected

Geometry	
Shape	Square
Bears on it	8x8 post
Bearing size	7 1/2" x 7 1/2"
Footing width	2'
Footing length	2'
Footing depth	10"

Footing Properties	
Steel yield strength	60,000 psi
Concrete strength	3,000 psi
Soil bearing pressure	1,500 psf
Concrete density	145 pcf
Bottom reinf. cover	3"

Soil Properties and Post	
Soil depth above footing	0
Post	8x8 post
Post base	fabricated
Cap	(2) HL55, p. 315

Reinforcement	
Bottom mat	Bot. (3) #4 each way
Bars along the width	(3) #4
Bars along the length	(3) #4
Selected for	moment and minimum steel
Plain concrete (no reinforcing)	No

- Soil bearing is checked at service level (ASD) and includes the footing's own weight; shear, moment and crushing at strength level (LRFD), ACI 318-14, loads combined to ASCE 7-16.
- Reinforcement is selected for the moment and for minimum steel (ACI 318-14: 0.0018 Ag for Grade 60), at no more than 3h or 18 in.
- Wood on the concrete: the wood's own bearing -- a sill or plate in Fc-perp, a post's end grain in Fc -- can govern below the concrete value; it is not checked on this sheet.

Applied Loads	Location	Trib. Width	Dead	Roof Live	Comments
1 - Point (lb)	--	N/A	907.8	826.9	Linked from: Beam #4, Support 1
2 - Point (lb)	--	N/A	1,405	1,310	Linked from: Beam #3, Support 2

SpotFtg Bm #4-2

Spot Footing 2' x 2' x 10" deep -- Bot. (3) #4 each way

Level: Basement | f'c 3,000 psi | rebar Fy 60 ksi | soil 1,500 psf | on it: 8x8 post | ACI 318-14

PASSED

Controls: Soil Bearing Pressure 77% used
Adequacy 22.9% (capacity to spare)

WHAT LOADS IT

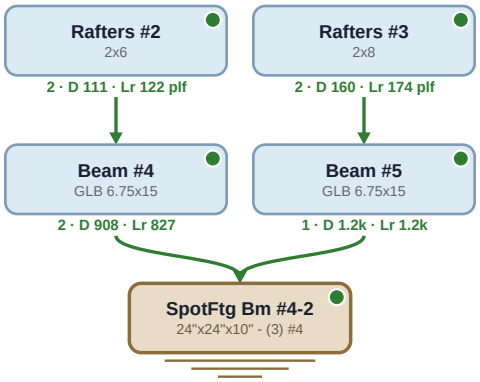

SECTION

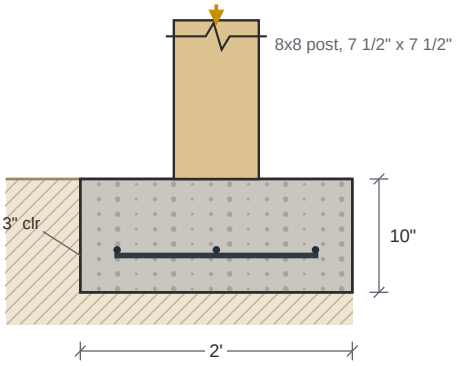

PLAN -- BOTTOM MAT

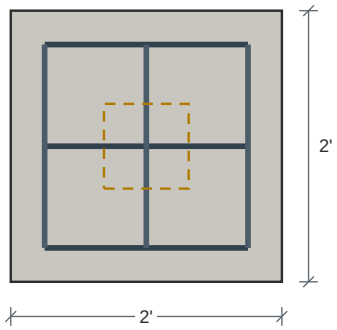

Bot. (3) #4 each way

Carrying: Dead 2,147 lb Roof Live 1,998 lb

Design Results	Actual	Allowed	Result	Method	Load Combination
Soil Bearing Pressure (psf)	1,157	1,500	Passed (77% used)	ASD	D+Lr
One-Way Shear X (lbs)	481	12,324	Passed (4% used)	LRFD	1.2D+1.6Lr+L
One-Way Shear Y (lbs)	481	12,324	Passed (4% used)	LRFD	1.2D+1.6Lr+L
Two-Way Shear (lbs)	3,809	59,811	Passed (6% used)	LRFD	1.2D+1.6Lr+L
Moment X (ft-lbs)	1,028	16,081	Passed (6% used)	LRFD	1.2D+1.6Lr+L
Moment Y (ft-lbs)	1,028	16,081	Passed (6% used)	LRFD	1.2D+1.6Lr+L
Crushing (lbs)	5,774	186,469	Passed (3% used)	LRFD	1.2D+1.6Lr+L
Depth Above Bars (in)	6 3/4"	6" min	Meets the minimum	code	ACI 318-14 13.3.1.2

Footing Specification

as entered on the footing, and the mat the check selected

Geometry	
Shape	Square
Bears on it	8x8 post
Bearing size	7 1/2" x 7 1/2"
Footing width	2'
Footing length	2'
Footing depth	10"

Footing Properties	
Steel yield strength	60,000 psi
Concrete strength	3,000 psi
Soil bearing pressure	1,500 psf
Concrete density	145 pcf
Bottom reinf. cover	3"

Soil Properties and Post	
Soil depth above footing	0
Post	8x8 post
Post base	fabricated
Cap	(2) HL55, p. 315

Reinforcement	
Bottom mat	Bot. (3) #4 each way
Bars along the width	(3) #4
Bars along the length	(3) #4
Selected for	moment and minimum steel
Plain concrete (no reinforcing)	No

- Soil bearing is checked at service level (ASD) and includes the footing's own weight; shear, moment and crushing at strength level (LRFD), ACI 318-14, loads combined to ASCE 7-16.
- Reinforcement is selected for the moment and for minimum steel (ACI 318-14: 0.0018 Ag for Grade 60), at no more than 3h or 18 in.
- Wood on the concrete: the wood's own bearing -- a sill or plate in Fc-perp, a post's end grain in Fc -- can govern below the concrete value; it is not checked on this sheet.

Applied Loads	Location	Trib. Width	Dead	Roof Live	Comments
1 - Point (lb)	--	N/A	907.8	826.9	Linked from: Beam #4, Support 2
2 - Point (lb)	--	N/A	1,239	1,172	Linked from: Beam #5, Support 1

SpotFtg Bm #5-2

Spot Footing 2' 6" x 2' 6" x 10" deep -- Bot. (3) #4 each way

Level: Basement | f'c 3,000 psi | rebar Fy 60 ksi | soil 1,500 psf | on it: 8x8 post | ACI 318-14

PASSED

Controls: Soil Bearing Pressure 97% used
Adequacy 2.6% (capacity to spare)

What Loads It

click a box to go to that member

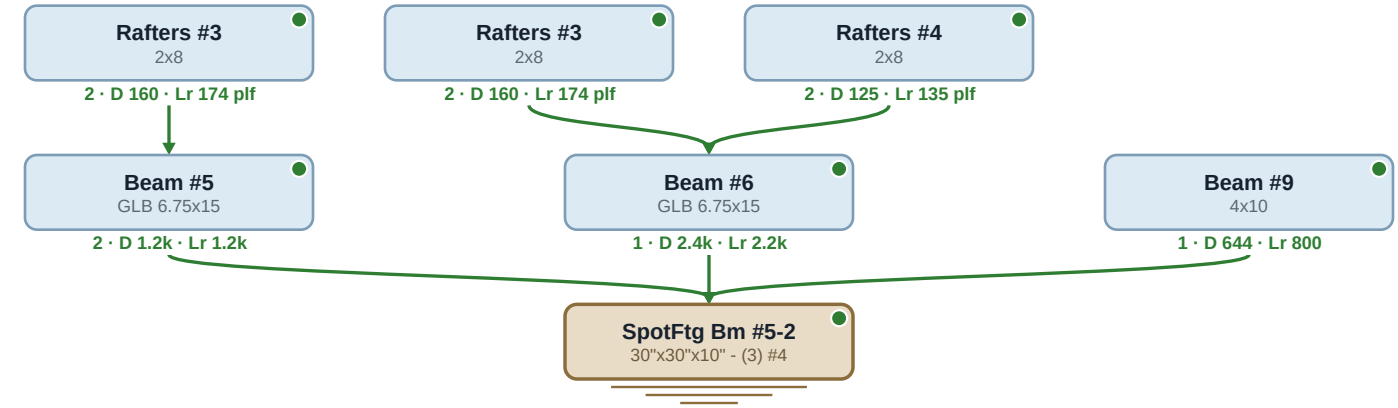

SECTION

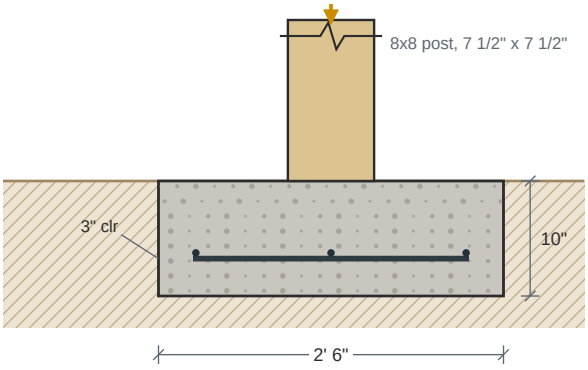

PLAN -- BOTTOM MAT

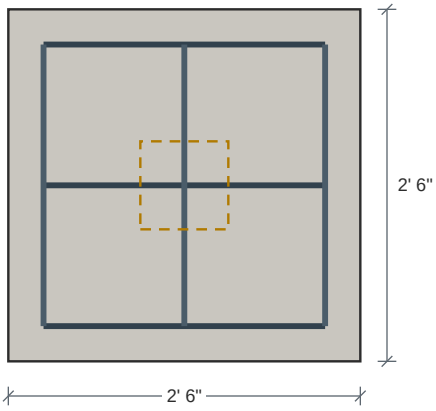

Bot. (3) #4 each way

Carrying: Roof Live 4,141 lb Dead 4,235 lb

Design Results	Actual	Allowed	Result	Method	Load Combination
Soil Bearing Pressure (psf)	1,461	1,500	Passed (97% used)	ASD	D+Lr
One-Way Shear X (lbs)	1,951	15,405	Passed (13% used)	LRFD	1.2D+1.6Lr+L
One-Way Shear Y (lbs)	1,951	15,405	Passed (13% used)	LRFD	1.2D+1.6Lr+L
Two-Way Shear (lbs)	9,157	59,811	Passed (15% used)	LRFD	1.2D+1.6Lr+L
Moment X (ft-lbs)	2,801	16,240	Passed (17% used)	LRFD	1.2D+1.6Lr+L
Moment Y (ft-lbs)	2,801	16,240	Passed (17% used)	LRFD	1.2D+1.6Lr+L
Crushing (lbs)	11,707	186,469	Passed (6% used)	LRFD	1.2D+1.6Lr+L
Depth Above Bars (in)	6 3/4"	6" min	Meets the minimum	code	ACI 318-14 13.3.1.2

Footing Specification

as entered on the footing, and the mat the check selected

Geometry	
Shape	Square
Bears on it	8x8 post
Bearing size	7 1/2" x 7 1/2"
Footing width	2' 6"
Footing length	2' 6"
Footing depth	10"

Footing Properties	
Steel yield strength	60,000 psi
Concrete strength	3,000 psi
Soil bearing pressure	1,500 psf
Concrete density	145 pcf
Bottom reinf. cover	3"

SpotFtg Bm #5-2 (continued)

Spot Footing | 2' 6" x 2' 6" x 10" deep -- Bot. (3) #4 each way

Soil Properties and Post	
Soil depth above footing	0
Post	8x8 post
Post base	fabricated
Cap	(2) HL55, p. 315

Reinforcement	
Bottom mat	Bot. (3) #4 each way
Bars along the width	(3) #4
Bars along the length	(3) #4
Selected for	moment and minimum steel
Plain concrete (no reinforcing)	No

- Soil bearing is checked at service level (ASD) and includes the footing's own weight; shear, moment and crushing at strength level (LRFD), ACI 318-14, loads combined to ASCE 7-16.
- Reinforcement is selected for the moment and for minimum steel (ACI 318-14: 0.0018 Ag for Grade 60), at no more than 3h or 18 in.
- Wood on the concrete: the wood's own bearing -- a sill or plate in Fc-perp, a post's end grain in Fc -- can govern below the concrete value; it is not checked on this sheet.

Applied Loads	Location	Trib. Width	Dead	Roof Live	Comments
1 - Point (lb)	--	N/A	1,239	1,172	Linked from: Beam #5, Support 2
2 - Point (lb)	--	N/A	2,352	2,169	Linked from: Beam #6, Support 1
3 - Point (lb)	--	N/A	644.2	800	Linked from: Beam #9, Support 1

SpotFtg Bm #6-2

Spot Footing 2' 6" x 1' 4" x 10" deep -- Unreinforced (Plain)

Level: Basement | f'c 3,000 psi | soil 1,500 psf | in a foundation wall (6" x 24" stem, typed); the wall ends 24" left of the pad | on it: Beam #6 in a beam pocket in a 2x6 wall, on a (5)-stud pack | ACI 318-14

PASSED

Controls: Soil Bearing Pressure 93% used
Adequacy 6.7% (capacity to spare)

WHAT LOADS IT

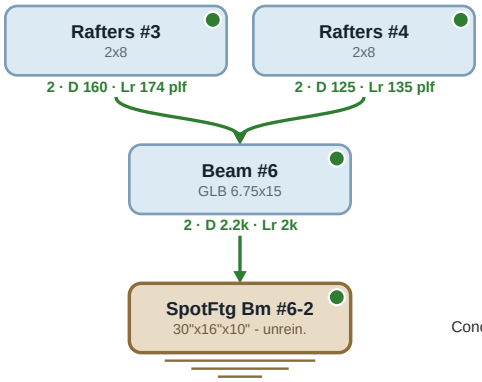

ELEVATION IN THE FOUNDATION WALL

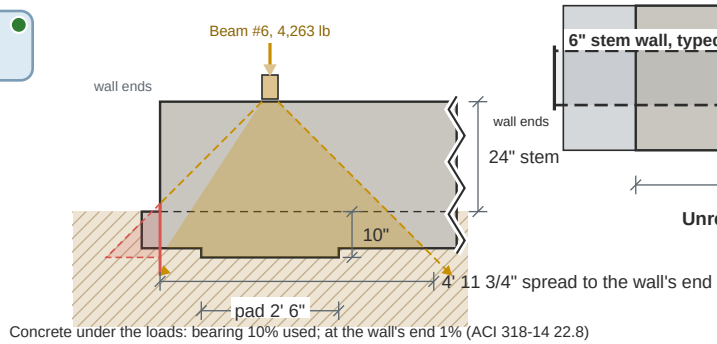

Concrete under the loads: bearing 10% used; at the wall's end 1% (ACI 318-14 22.8)

PLAN -- PLAIN CONCRETE, NO REINFORCING

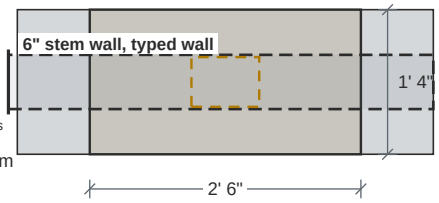

Unreinforced (Plain)

Carrying: Dead 2,228 lb Roof Live 2,035 lb

Design Results	Actual	Allowed	Result	Method	Load Combination
Soil Bearing Pressure (psf)	1,400	1,500	Passed (93% used)	ASD	D+Lr
One-Way Shear Y (lbs)	642	5,609	Passed (11% used)	LRFD	1.2D+1.6Lr+L
Two-Way Shear (lbs)	3,345	40,561	Passed (8% used)	LRFD	1.2D+1.6Lr+L
Moment X (ft-lbs)	678	4,382	Passed (15% used)	LRFD	1.2D+1.6Lr+L
Moment Y (ft-lbs)	1,419	2,337	Passed (61% used)	LRFD	1.2D+1.6Lr+L
Crushing (lbs)	5,930	126,225	Passed (5% used)	LRFD	1.2D+1.6Lr+L
Minimum Thickness (in)	10"	8" min	Meets the minimum	code	ACI 318-14 Ch. 14

Footing Specification

as entered on the footing, and the mat the check selected

Geometry	
Shape	Rectangular
Bears on it	Beam #6 in a beam pocket in a 2x6 wall, on a (5)-stud pack
Bearing size	7 1/2" x 5 1/2"
Footing width	2' 6"
Footing length	1' 4"
Footing depth	10"

Footing Properties	
Concrete strength	3,000 psi
Soil bearing pressure	1,500 psf
Concrete density	145 pcf

Soil Properties	
Soil depth above footing	0

Reinforcement	
Reinforcing	none -- plain concrete
Plain concrete (no reinforcing)	Yes

- Soil bearing is checked at service level (ASD) and includes the footing's own weight; shear, moment and crushing at strength level (LRFD), ACI 318-14, loads combined to ASCE 7-16.
- Which way round the bearing sits on the pad is not known: it is checked both ways and the worse is shown.
- Wood on the concrete: the wood's own bearing -- a sill or plate in Fc-perp, a post's end grain in Fc -- can govern below the concrete value; it is not checked on this sheet.

Applied Loads	Location	Trib. Width	Dead	Roof Live	Comments
1 - Point (lb)	--	N/A	2,228	2,035	Linked from: Beam #6, Support 2

SpotFtg Bm #7-1

PASSED

Spot Footing 1' 4" x 1' 4" x 10" deep -- Bot. (2) #4 each way

Level: Basement | f'c 3,000 psi | rebar Fy 60 ksi | soil 1,500 psf | in a foundation wall (6" x 24" stem, typed); the wall ends 1 3/4" right of the pad | on it: concrete pier 5 1/2 x 5 1/2, as set on the pad | ACI 318-14

Controls: Soil Bearing Pressure 73% used
Adequacy 26.7% (capacity to spare)

WHAT LOADS IT

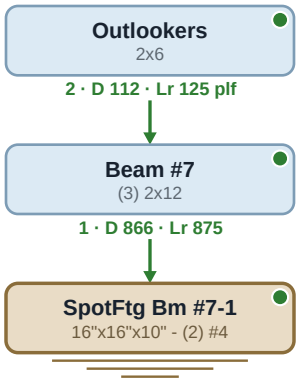

ELEVATION IN THE FOUNDATION WALL

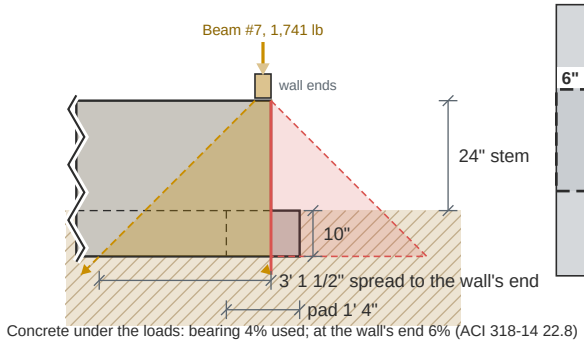

Concrete under the loads: bearing 4% used; at the wall's end 6% (ACI 318-14 22.8)

PLAN -- BOTTOM MAT

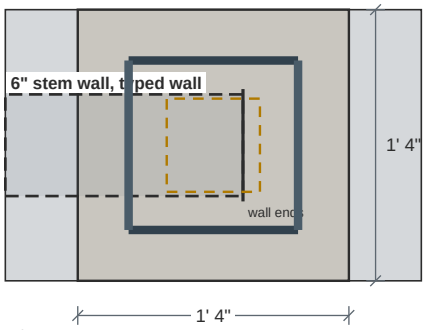

Bot. (2) #4 each way

Carrying: Dead 866 lb Roof Live 875 lb

Design Results	Actual	Allowed	Result	Method	Load Combination
Soil Bearing Pressure (psf)	1,100	1,500	Passed (73% used)	ASD	D+Lr
One-Way Shear X (lbs)	0	8,216	Passed (0% used)	LRFD	1.2D+1.6Lr+L
One-Way Shear Y (lbs)	0	8,216	Passed (0% used)	LRFD	1.2D+1.6Lr+L
Two-Way Shear (lbs)	1,067	51,267	Passed (2% used)	LRFD	1.2D+1.6Lr+L
Moment X (ft-lbs)	175	10,721	Passed (2% used)	LRFD	1.2D+1.6Lr+L
Moment Y (ft-lbs)	175	10,721	Passed (2% used)	LRFD	1.2D+1.6Lr+L
Crushing (lbs)	2,439	100,279	Passed (2% used)	LRFD	1.2D+1.6Lr+L
Depth Above Bars (in)	6 3/4"	6" min	Meets the minimum	code	ACI 318-14 13.3.1.2

Footing Specification

as entered on the footing, and the mat the check selected

Geometry	
Shape	Square
Bears on it	concrete pier 5 1/2 x 5 1/2, as set on the pad
Bearing size	5 1/2" x 5 1/2"
Footing width	1' 4"
Footing length	1' 4"
Footing depth	10"

Footing Properties	
Steel yield strength	60,000 psi
Concrete strength	3,000 psi
Soil bearing pressure	1,500 psf
Concrete density	145 pcf
Bottom reinf. cover	3"

Soil Properties	
Soil depth above footing	0

Reinforcement	
Bottom mat	Bot. (2) #4 each way
Bars along the width	(2) #4
Bars along the length	(2) #4
Selected for	moment and minimum steel
Plain concrete (no reinforcing)	No

- Soil bearing is checked at service level (ASD) and includes the footing's own weight; shear, moment and crushing at strength level (LRFD), ACI 318-14, loads combined to ASCE 7-16.
- Reinforcement is selected for the moment and for minimum steel (ACI 318-14: 0.0018 Ag for Grade 60), at no more than 3h or 18 in.

Applied Loads	Location	Trib. Width	Dead	Roof Live	Comments
1 - Point (lb)	--	N/A	865.6	875	Linked from: Beam #7, Support 1

SpotFtg Bm #7-2

Spot Footing 1' 4" x 1' 4" x 10" deep -- Unreinforced (Plain)

Level: Basement | f'c 3,000 psi | soil 1,500 psf | in a foundation wall (6" x 24" stem, typed) | on it: Beam #7 in a beam pocket in a 2x6 wall, on a (3)-stud pack | ACI 318-14

PASSED

Controls: Soil Bearing Pressure 73% used
Adequacy 26.7% (capacity to spare)

WHAT LOADS IT

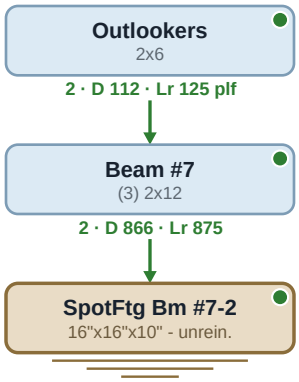

ELEVATION IN THE FOUNDATION WALL

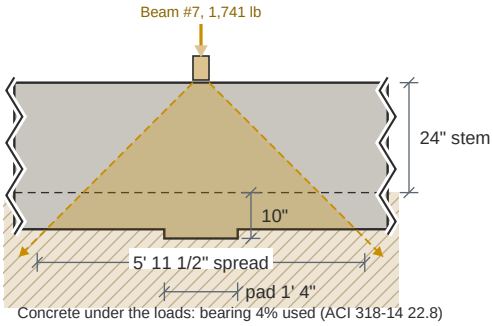

PLAN -- PLAIN CONCRETE, NO REINFORCING

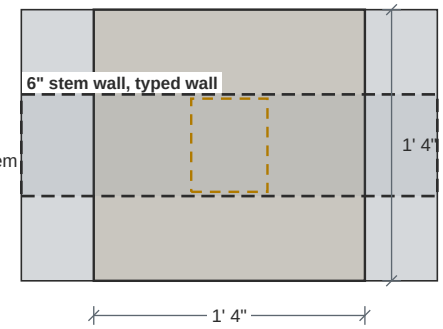

Unreinforced (Plain)

Carrying: Dead 866 lb Roof Live 875 lb

Design Results	Actual	Allowed	Result	Method	Load Combination
Soil Bearing Pressure (psf)	1,100	1,500	Passed (73% used)	ASD	D+Lr
Two-Way Shear (lbs)	831	36,365	Passed (2% used)	LRFD	1.2D+1.6Lr+L
Moment X (ft-lbs)	279	2,337	Passed (12% used)	LRFD	1.2D+1.6Lr+L
Moment Y (ft-lbs)	300	2,337	Passed (13% used)	LRFD	1.2D+1.6Lr+L
Crushing (lbs)	2,439	75,735	Passed (3% used)	LRFD	1.2D+1.6Lr+L
Minimum Thickness (in)	10"	8" min	Meets the minimum	code	ACI 318-14 Ch. 14

Footing Specification

as entered on the footing, and the mat the check selected

Geometry	
Shape	Square
Bears on it	Beam #7 in a beam pocket in a 2x6 wall, on a (3)-stud pack
Bearing size	4 1/2" x 5 1/2"
Footing width	1' 4"
Footing length	1' 4"
Footing depth	10"

Footing Properties	
Concrete strength	3,000 psi
Soil bearing pressure	1,500 psf
Concrete density	145 pcf

Soil Properties	
Soil depth above footing	0

Reinforcement	
Reinforcing	none -- plain concrete
Plain concrete (no reinforcing)	Yes

- Soil bearing is checked at service level (ASD) and includes the footing's own weight; shear, moment and crushing at strength level (LRFD), ACI 318-14, loads combined to ASCE 7-16.
- Wood on the concrete: the wood's own bearing -- a sill or plate in Fc-perp, a post's end grain in Fc -- can govern below the concrete value; it is not checked on this sheet.

Applied Loads	Location	Trib. Width	Dead	Roof Live	Comments
1 - Point (lb)	--	N/A	865.6	875	Linked from: Beam #7, Support 2

SpotFtg Bm #8-2

PASSED

Spot Footing 2' 6" x 2' 6" x 10" deep -- Bot. (3) #4 each way

Level: Basement | f'c 3,000 psi | rebar Fy 60 ksi | soil 1,500 psf | in a foundation wall (6" x 24" stem, typed); the wall ends 1 3/4" left of the pad | on it: Beam #8 in a beam pocket in a 2x6 wall, on a (4)-stud pack | ACI 318-14

Controls: Soil Bearing Pressure 68% used
Adequacy 32.2% (capacity to spare)

WHAT LOADS IT

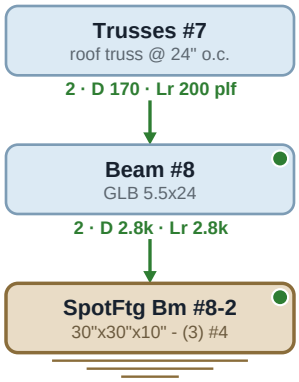

ELEVATION IN THE FOUNDATION WALL

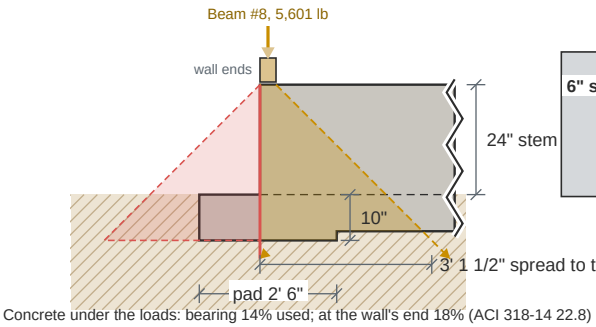

Concrete under the loads: bearing 14% used; at the wall's end 18% (ACI 318-14 22.8)

PLAN -- BOTTOM MAT

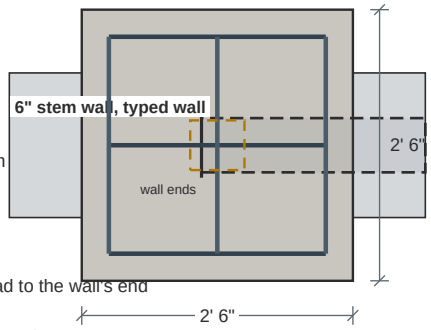

Bot. (3) #4 each way

Carrying: Dead 2,801 lb Roof Live 2,800 lb

Design Results	Actual	Allowed	Result	Method	Load Combination
Soil Bearing Pressure (psf)	1,017	1,500	Passed (68% used)	ASD	D+Lr
One-Way Shear X (lbs)	1,568	15,405	Passed (10% used)	LRFD	1.2D+1.6Lr+L
One-Way Shear Y (lbs)	1,503	15,405	Passed (10% used)	LRFD	1.2D+1.6Lr+L
Two-Way Shear (lbs)	6,535	52,335	Passed (12% used)	LRFD	1.2D+1.6Lr+L
Moment X (ft-lbs)	2,022	16,240	Passed (12% used)	LRFD	1.2D+1.6Lr+L
Moment Y (ft-lbs)	1,985	16,240	Passed (12% used)	LRFD	1.2D+1.6Lr+L
Crushing (lbs)	7,842	109,395	Passed (7% used)	LRFD	1.2D+1.6Lr+L
Depth Above Bars (in)	6 3/4"	6" min	Meets the minimum	code	ACI 318-14 13.3.1.2

Footing Specification

as entered on the footing, and the mat the check selected

Geometry	
Shape	Square
Bears on it	Beam #8 in a beam pocket in a 2x6 wall, on a (4)-stud pack
Bearing size	6" x 5 1/2"
Footing width	2' 6"
Footing length	2' 6"
Footing depth	10"

Footing Properties	
Steel yield strength	60,000 psi
Concrete strength	3,000 psi
Soil bearing pressure	1,500 psf
Concrete density	145 pcf
Bottom reinf. cover	3"

Soil Properties	
Soil depth above footing	0

Reinforcement	
Bottom mat	Bot. (3) #4 each way
Bars along the width	(3) #4
Bars along the length	(3) #4
Selected for	moment and minimum steel
Plain concrete (no reinforcing)	No

- Soil bearing is checked at service level (ASD) and includes the footing's own weight; shear, moment and crushing at strength level (LRFD), ACI 318-14, loads combined to ASCE 7-16.
- Reinforcement is selected for the moment and for minimum steel (ACI 318-14: 0.0018 Ag for Grade 60), at no more than 3h or 18 in.
- Wood on the concrete: the wood's own bearing -- a sill or plate in Fc-perp, a post's end grain in Fc -- can govern below the concrete value; it is not checked on this sheet.

Applied Loads	Location	Trib. Width	Dead	Roof Live	Comments
1 - Point (lb)	--	N/A	2,801	2,800	Linked from: Beam #8, Support 2

SpotFtg Bm #9-2

PASSED

Spot Footing 1' 4" x 2' x 8" deep -- Unreinforced (Plain)

Level: Basement | f'c 3,000 psi | soil 1,500 psf | in a foundation wall (6" x 24" stem, typed) | on it: Beam #9 through a 2x6 stud wall, on a (3)-stud pack; Girder #3 through a 2x6 stud wall, on a (3)-stud pack -- side by side, 9 x 5 1/2

Controls: Soil Bearing Pressure 86% used
Adequacy 13.7% (capacity to spare)

WHAT LOADS IT

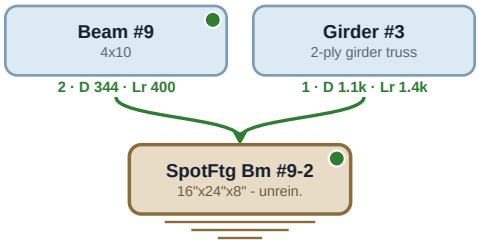

ELEVATION IN THE FOUNDATION WALL

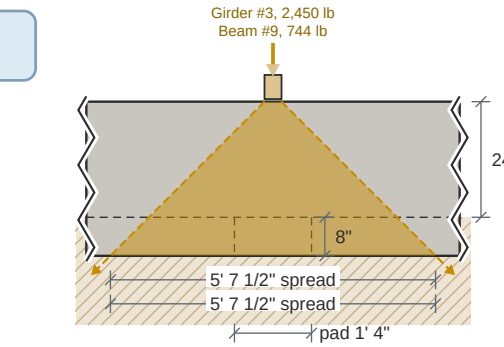

Concrete under the loads: bearing 6% used; where they overlap 9% (ACI 318-14 [illegible])

PLAN -- PLAIN CONCRETE, NO REINFORCING

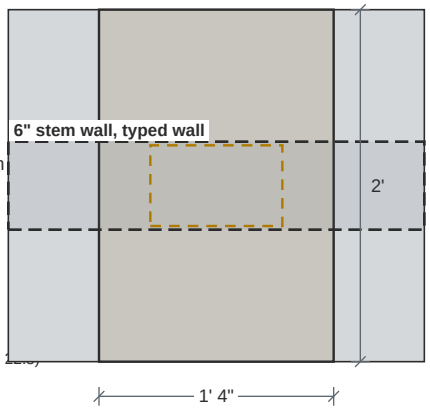

Unreinforced (Plain)

Carrying: Dead 1,394 lb Roof Live 1,800 lb

Design Results	Actual	Allowed	Result	Method	Load Combination
Soil Bearing Pressure (psf)	1,295	1,500	Passed (86% used)	ASD	D+Lr
One-Way Shear X (lbs)	617	4,207	Passed (15% used)	LRFD	1.2D+1.6Lr+L
Two-Way Shear (lbs)	2,508	27,798	Passed (9% used)	LRFD	1.2D+1.6Lr+L
Moment X (ft-lbs)	892	1,315	Passed (68% used)	LRFD	1.2D+1.6Lr+L
Moment Y (ft-lbs)	392	1,972	Passed (20% used)	LRFD	1.2D+1.6Lr+L
Crushing (lbs)	4,553	151,470	Passed (3% used)	LRFD	1.2D+1.6Lr+L
Minimum Thickness (in)	8"	8" min	Meets the minimum	code	ACI 318-14 Ch. 14

Footing Specification

as entered on the footing, and the mat the check selected

Geometry	
Shape	Rectangular
Bears on it	Beam #9 through a 2x6 stud wall, on a (3)-stud pack; Girder #3 through a 2x6 stud wall, on a (3)-stud pack -- side by side, 9 x 5 1/2 together
Bearing size	9" x 5 1/2"
Footing width	1' 4"
Footing length	2'
Footing depth	8"

Footing Properties	
Concrete strength	3,000 psi
Soil bearing pressure	1,500 psf
Concrete density	145 pcf

Soil Properties	
Soil depth above footing	0

Reinforcement	
Reinforcing	none -- plain concrete
Plain concrete (no reinforcing)	Yes

- Soil bearing is checked at service level (ASD) and includes the footing's own weight; shear, moment and crushing at strength level (LRFD), ACI 318-14, loads combined to ASCE 7-16.
- The members on this pad are not placed on it (Load locations): their bearings are taken side by side at the pad's column, one footprint. Place them to check each where it lands.
- Which way round the bearing sits on the pad is not known: it is checked both ways and the worse is shown.
- Wood on the concrete: the wood's own bearing -- a sill or plate in Fc-perp, a post's end grain in Fc -- can govern below the concrete value; it is not checked on this sheet.

Applied Loads	Location	Trib. Width	Dead	Roof Live	Comments
1 - Point (lb)	--	N/A	344.2	400	Linked from: Beam #9, Support 2
2 - Point (lb)	--	N/A	1,050	1,400	Linked from: Girder #3, Support 1

SpotFtg Bm #10-1

PASSED

Spot Footing 2' x 2' x 11" deep -- Unreinforced (Plain)

Controls: Soil Bearing Pressure 59% used
Adequacy 41.4% (capacity to spare)

Level: Basement | f'c 3,000 psi | soil 1,500 psf | in a foundation wall (10" x 24" stem, typed); the wall ends 1 3/4" right of the pad | on it: concrete pier 5 1/2 x 5 1/2, as set on the pad | ACI 318-14

WHAT LOADS IT

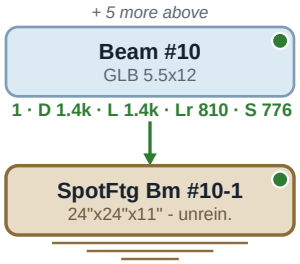

ELEVATION IN THE FOUNDATION WALL

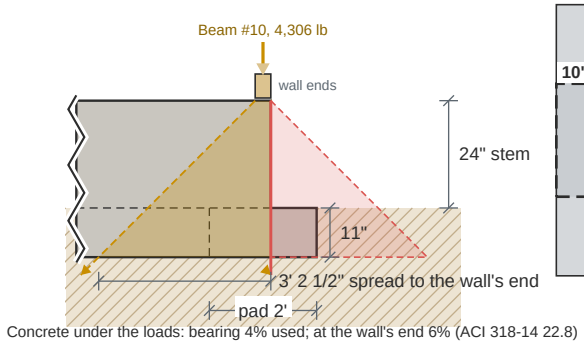

Concrete under the loads: bearing 4% used; at the wall's end 6% (ACI 318-14 22.8)

PLAN -- PLAIN CONCRETE, NO REINFORCING

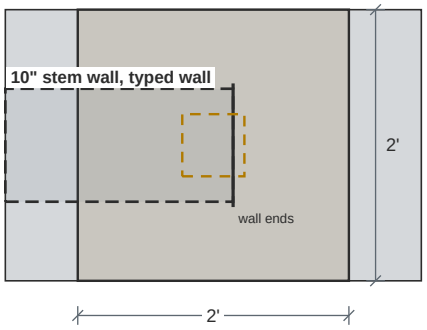

Unreinforced (Plain)

Carrying: Dead 1,355 lb Snow 776 lb Roof Live 810 lb Floor Live 1,364 lb

Design Results	Actual	Allowed	Result	Method	Load Combination
Soil Bearing Pressure (psf)	879	1,500	Passed (59% used)	ASD	D+0.75L+0.75Lr
One-Way Shear X (lbs)	45	9,465	Passed (0% used)	LRFD	1.2D+1.6Lr+L
One-Way Shear Y (lbs)	45	9,465	Passed (0% used)	LRFD	1.2D+1.6Lr+L
Two-Way Shear (lbs)	2,722	45,631	Passed (6% used)	LRFD	1.2D+1.6Lr+L
Moment X (ft-lbs)	637	4,437	Passed (14% used)	LRFD	1.2D+1.6Lr+L
Moment Y (ft-lbs)	637	4,437	Passed (14% used)	LRFD	1.2D+1.6Lr+L
Crushing (lbs)	4,287	92,565	Passed (5% used)	LRFD	1.2D+1.6Lr+L
Minimum Thickness (in)	11"	8" min	Meets the minimum	code	ACI 318-14 Ch. 14

Footing Specification

as entered on the footing, and the mat the check selected

Geometry	
Shape	Square
Bears on it	concrete pier 5 1/2 x 5 1/2, as set on the pad
Bearing size	5 1/2" x 5 1/2"
Footing width	2'
Footing length	2'
Footing depth	11"

Footing Properties	
Concrete strength	3,000 psi
Soil bearing pressure	1,500 psf
Concrete density	145 pcf

Soil Properties	
Soil depth above footing	0

Reinforcement	
Reinforcing	none -- plain concrete
Plain concrete (no reinforcing)	Yes

- Soil bearing is checked at service level (ASD) and includes the footing's own weight; shear, moment and crushing at strength level (LRFD), ACI 318-14, loads combined to ASCE 7-16.

Applied Loads	Location	Trib. Width	Dead	Floor Live	Roof Live	Snow	Comments
1 - Point (lb)	--	N/A	1,355	1,364	810.1	776.5	Linked from: Beam #10, Support 1

SpotFtg Bm #10-2

Spot Footing 2' x 2' x 10" deep -- Bot. (3) #4 each way

Level: Basement | f'c 3,000 psi | rebar Fy 60 ksi | soil 1,500 psf | on it: 6x6 post (assumed) | ACI 318-14

PASSED

Controls: Soil Bearing Pressure 95% used
Adequacy 4.9% (capacity to spare)

WHAT LOADS IT

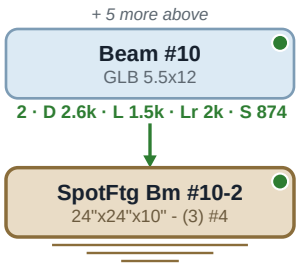

SECTION

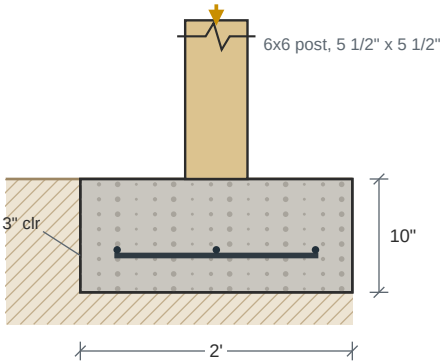

PLAN -- BOTTOM MAT

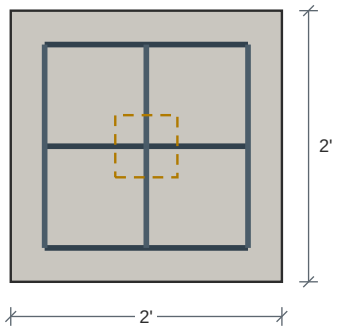

Bot. (3) #4 each way

Carrying: Dead 2,561 lb Snow 874 lb Roof Live 2,024 lb Floor Live 1,524 lb

Design Results	Actual	Allowed	Result	Method	Load Combination
Soil Bearing Pressure (psf)	1,426	1,500	Passed (95% used)	ASD	D+0.75L+0.75Lr
One-Way Shear X (lbs)	980	12,324	Passed (8% used)	LRFD	1.2D+1.6Lr+L
One-Way Shear Y (lbs)	980	12,324	Passed (8% used)	LRFD	1.2D+1.6Lr+L
Two-Way Shear (lbs)	5,877	51,267	Passed (11% used)	LRFD	1.2D+1.6Lr+L
Moment X (ft-lbs)	1,536	16,081	Passed (10% used)	LRFD	1.2D+1.6Lr+L
Moment Y (ft-lbs)	1,536	16,081	Passed (10% used)	LRFD	1.2D+1.6Lr+L
Crushing (lbs)	7,836	100,279	Passed (8% used)	LRFD	1.2D+1.6Lr+L
Depth Above Bars (in)	6 3/4"	6" min	Meets the minimum	code	ACI 318-14 13.3.1.2

Footing Specification

as entered on the footing, and the mat the check selected

Geometry	
Shape	Square
Bears on it	6x6 post (assumed)
Bearing size	5 1/2" x 5 1/2"
Footing width	2'
Footing length	2'
Footing depth	10"

Footing Properties	
Steel yield strength	60,000 psi
Concrete strength	3,000 psi
Soil bearing pressure	1,500 psf
Concrete density	145 pcf
Bottom reinf. cover	3"

Soil Properties and Post	
Soil depth above footing	0
Post	6x6 post (assumed)
Post base	fabricated
Cap	TimberLOK 15" + (1) HL55, p. 315

Reinforcement	
Bottom mat	Bot. (3) #4 each way
Bars along the width	(3) #4
Bars along the length	(3) #4
Selected for	moment and minimum steel
Plain concrete (no reinforcing)	No

- Soil bearing is checked at service level (ASD) and includes the footing's own weight; shear, moment and crushing at strength level (LRFD), ACI 318-14, loads combined to ASCE 7-16.
- Reinforcement is selected for the moment and for minimum steel (ACI 318-14: 0.0018 Ag for Grade 60), at no more than 3h or 18 in.
- Wood on the concrete: the wood's own bearing -- a sill or plate in Fc-perp, a post's end grain in Fc -- can govern below the concrete value; it is not checked on this sheet.

Applied Loads	Location	Trib. Width	Dead	Floor Live	Roof Live	Snow	Comments
1 - Point (lb)	--	N/A	2,561	1,524	2,024	873.5	Linked from: Beam #10, Support 2

SpotFtg Bm #11-1

PASSED

Spot Footing 5' x 3' x 10" deep -- Bot. (4) #4 the long way, (6) #4 the short way

Controls: Soil Bearing Pressure 89% used
Adequacy 10.8% (capacity to spare)

Level: Basement | f'c 3,000 psi | rebar Fy 60 ksi | soil 1,500 psf | in a foundation wall (10" x 24" stem, typed); the wall ends 9 1/2" right of the pad | 2 loads placed: Beam #11 6" x 5 1/2", Beam #13 6" x 5 1/2" | ACI 318-14

WHAT LOADS IT

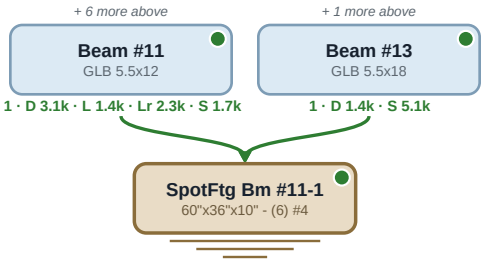

ELEVATION IN THE FOUNDATION WALL

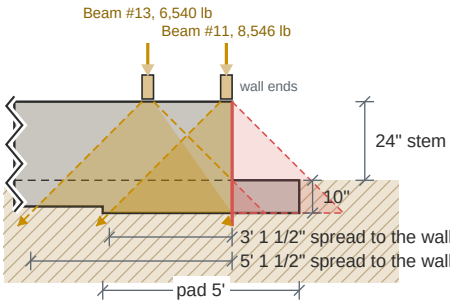

PLAN -- BOTTOM MAT

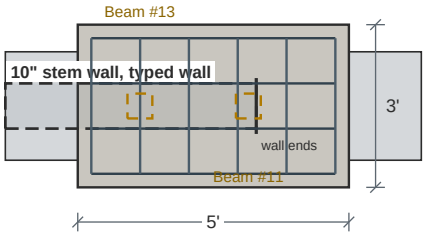

Bot. (4) #4 the long way, (6) #4 the short way

Concrete under the loads: bearing 10% used; at the wall's end 12% (ACI 318-14 22.8)

Carrying: Dead 4,530 lb Snow 6,857 lb Roof Live 2,332 lb Floor Live 1,367 lb

Design Results	Actual	Allowed	Result	Method	Load Combination
Soil Bearing Pressure (psf)	1,338	1,500	Passed (89% used)	ASD	D+S
One-Way Shear X (lbs)	4,444	30,809	Passed (14% used)	LRFD	1.2D+1.6S+L
One-Way Shear Y (lbs)	2,983	18,486	Passed (16% used)	LRFD	1.2D+1.6Lr+L
Two-Way Shear (lbs)	8,294	52,335	Passed (16% used)	LRFD	1.2D+1.6S+L (Beam #13)
Moment X (ft-lbs)	2,666	8,323	Passed (32% used)	LRFD	1.2D+1.6S+L (Beam #13)
Moment Y (ft-lbs)	3,766	21,559	Passed (17% used)	LRFD	1.2D+1.6Lr+L
Crushing (lbs)	9,904	109,395	Passed (9% used)	LRFD	1.2D+1.6S+L (Beam #13)
Depth Above Bars (in)	6 3/4"	6" min	Meets the minimum	code	ACI 318-14 13.3.1.2

Footing Specification

as entered on the footing, and the mat the check selected

Geometry	
Shape	Rectangular
Bears on it	concrete pier 5 1/2 x 5 1/2, as set on the pad
Bearing size	5 1/2" x 5 1/2"
Footing width	5'
Footing length	3'
Footing depth	10"

Footing Properties	
Steel yield strength	60,000 psi
Concrete strength	3,000 psi
Soil bearing pressure	1,500 psf
Concrete density	145 pcf
Bottom reinf. cover	3"

Soil Properties	
Soil depth above footing	0

Reinforcement	
Bottom mat	Bot. (4) #4 the long way, (6) #4 the short way
Bars the long way	(4) #4
Bars the short way	(6) #4
Selected for	moment and minimum steel
Plain concrete (no reinforcing)	No

- Soil bearing is checked at service level (ASD) and includes the footing's own weight; shear, moment and crushing at strength level (LRFD), ACI 318-14, loads combined to ASCE 7-16.
- Reinforcement is selected for the moment and for minimum steel (ACI 318-14: 0.0018 Ag for Grade 60), at no more than 3h or 18 in.
- 2 loads on the pad, each where it lands: the soil pressure runs 422 to 1,338 psf.
- Under Beam #13: a band 15.4 in wide (its width + 0.75 d each side), the mat's share of it.

Applied Loads	Location	Trib. Width	Dead	Floor Live	Roof Live	Snow	Comments
1 - Point (lb)	X 7 3/4", Y 0"	N/A	3,129	1,367	2,332	1,718	Linked from: Beam #11, Support 1
2 - Point (lb)	X -16 1/4", Y 0"	N/A	1,401	--	--	5,139	Linked from: Beam #13, Support 1

SpotFtg Bm #11-2

PASSED

Spot Footing 3' x 3' x 10" deep -- Bot. (4) #4 each way

Level: Basement | f'c 3,000 psi | rebar Fy 60 ksi | soil 1,500 psf | on it: 8x8 post | ACI 318-14

Controls: Soil Bearing Pressure 78% used
Adequacy 21.5% (capacity to spare)

WHAT LOADS IT

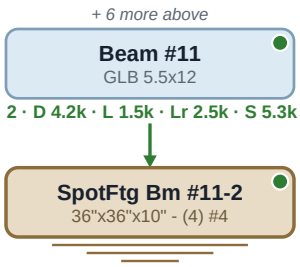

SECTION

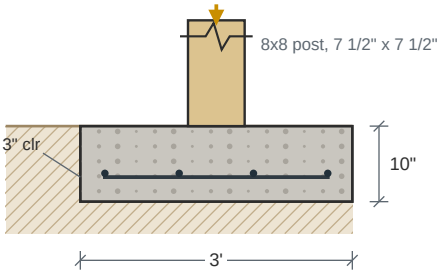

PLAN -- BOTTOM MAT

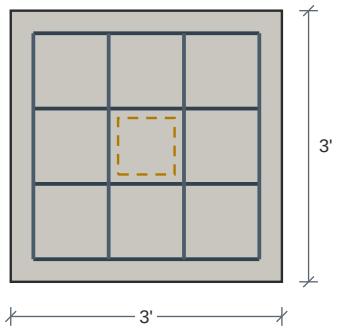

Bot. (4) #4 each way

Carrying: Dead 4,242 lb Snow 5,267 lb Roof Live 2,482 lb Floor Live 1,521 lb

Design Results	Actual	Allowed	Result	Method	Load Combination
Soil Bearing Pressure (psf)	1,177	1,500	Passed (78% used)	ASD	D+S
One-Way Shear X (lbs)	3,342	18,486	Passed (18% used)	LRFD	1.2D+1.6S+L
One-Way Shear Y (lbs)	3,342	18,486	Passed (18% used)	LRFD	1.2D+1.6S+L
Two-Way Shear (lbs)	12,765	59,811	Passed (21% used)	LRFD	1.2D+1.6S+L
Moment X (ft-lbs)	4,526	21,559	Passed (21% used)	LRFD	1.2D+1.6S+L
Moment Y (ft-lbs)	4,526	21,559	Passed (21% used)	LRFD	1.2D+1.6S+L
Crushing (lbs)	15,039	186,469	Passed (8% used)	LRFD	1.2D+1.6S+L
Depth Above Bars (in)	6 3/4"	6" min	Meets the minimum	code	ACI 318-14 13.3.1.2

Footing Specification

as entered on the footing, and the mat the check selected

Geometry	
Shape	Square
Bears on it	8x8 post
Bearing size	7 1/2" x 7 1/2"
Footing width	3'
Footing length	3'
Footing depth	10"

Footing Properties	
Steel yield strength	60,000 psi
Concrete strength	3,000 psi
Soil bearing pressure	1,500 psf
Concrete density	145 pcf
Bottom reinf. cover	3"

Soil Properties and Post	
Soil depth above footing	0
Post	8x8 post
Post base	fabricated
Cap	TimberLOK 15" + (1) HL55, p. 315

Reinforcement	
Bottom mat	Bot. (4) #4 each way
Bars along the width	(4) #4
Bars along the length	(4) #4
Selected for	moment and minimum steel
Plain concrete (no reinforcing)	No

- Soil bearing is checked at service level (ASD) and includes the footing's own weight; shear, moment and crushing at strength level (LRFD), ACI 318-14, loads combined to ASCE 7-16.
- Reinforcement is selected for the moment and for minimum steel (ACI 318-14: 0.0018 Ag for Grade 60), at no more than 3h or 18 in.
- Wood on the concrete: the wood's own bearing -- a sill or plate in Fc-perp, a post's end grain in Fc -- can govern below the concrete value; it is not checked on this sheet.

Applied Loads	Location	Trib. Width	Dead	Floor Live	Roof Live	Snow	Comments
1 - Point (lb)	--	N/A	4,242	1,521	2,482	5,267	Linked from: Beam #11, Support 2

SpotFtg Bm #14-2

PASSED

Spot Footing 3' x 3' x 10" deep -- Bot. (4) #4 each way

Controls: Soil Bearing Pressure 75% used
Adequacy 25.3% (capacity to spare)

Level: Basement | f'c 3,000 psi | rebar Fy 60 ksi | soil 1,500 psf | in a foundation wall (6" x 24" stem, typed); the wall ends 1 3/4" left of the pad | on it: Beam #14 in a beam pocket in a 2x6 wall, on a (4)-stud pack; Header #23 on (1)

WHAT LOADS IT

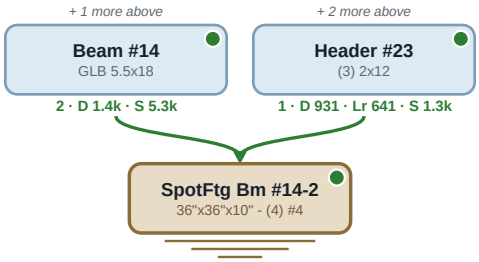

ELEVATION IN THE FOUNDATION WALL

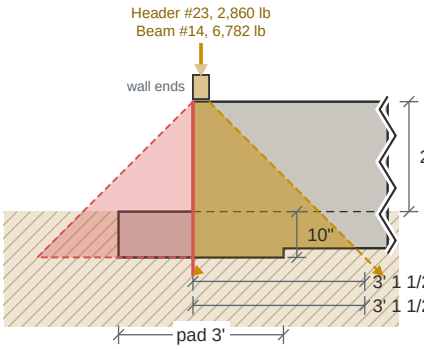

PLAN -- BOTTOM MAT

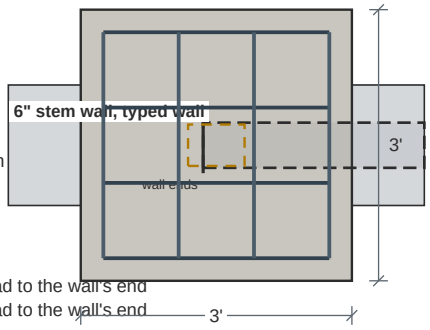

Concrete under the loads: bearing 18% used; where they overlap and at the wall's end 31% (ACI 318-14 22.8)

Bot. (4) #4 each way

Carrying: Dead 2,377 lb Snow 6,624 lb Roof Live 641 lb

Design Results	Actual	Allowed	Result	Method	Load Combination
Soil Bearing Pressure (psf)	1,121	1,500	Passed (75% used)	ASD	D+S
One-Way Shear X (lbs)	3,363	18,486	Passed (18% used)	LRFD	1.2D+1.6S+L
One-Way Shear Y (lbs)	2,989	18,486	Passed (16% used)	LRFD	1.2D+1.6S+L
Two-Way Shear (lbs)	11,708	55,539	Passed (21% used)	LRFD	1.2D+1.6S+L
Moment X (ft-lbs)	4,303	21,559	Passed (20% used)	LRFD	1.2D+1.6S+L
Moment Y (ft-lbs)	4,048	21,559	Passed (19% used)	LRFD	1.2D+1.6S+L
Crushing (lbs)	13,451	136,744	Passed (10% used)	LRFD	1.2D+1.6S+L
Depth Above Bars (in)	6 3/4"	6" min	Meets the minimum	code	ACI 318-14 13.3.1.2

Footing Specification

as entered on the footing, and the mat the check selected

Geometry	
Shape	Square
Bears on it	Beam #14 in a beam pocket in a 2x6 wall, on a (4)-stud pack; Header #23 on (1) trimmer -- side by side, 7 1/2 x 5 1/2 together
Bearing size	7 1/2" x 5 1/2"
Footing width	3'
Footing length	3'
Footing depth	10"

Footing Properties	
Steel yield strength	60,000 psi
Concrete strength	3,000 psi
Soil bearing pressure	1,500 psf
Concrete density	145 pcf
Bottom reinf. cover	3"

Soil Properties	
Soil depth above footing	0

Reinforcement	
Bottom mat	Bot. (4) #4 each way
Bars along the width	(4) #4
Bars along the length	(4) #4
Selected for	moment and minimum steel
Plain concrete (no reinforcing)	No

- Soil bearing is checked at service level (ASD) and includes the footing's own weight; shear, moment and crushing at strength level (LRFD), ACI 318-14, loads combined to ASCE 7-16.
- Reinforcement is selected for the moment and for minimum steel (ACI 318-14: 0.0018 Ag for Grade 60), at no more than 3h or 18 in.
- The members on this pad are not placed on it (Load locations): their bearings are taken side by side at the pad's column, one footprint. Place them to check each where it lands.
- Wood on the concrete: the wood's own bearing -- a sill or plate in Fc-perp, a post's end grain in Fc -- can govern below the concrete value; it is not checked on this sheet.

Applied Loads	Location	Trib. Width	Dead	Roof Live	Snow	Comments
1 - Point (lb)	--	N/A	1,447	--	5,335	Linked from: Beam #14, Support 2
2 - Point (lb)	--	N/A	930.7	640.6	1,289	Linked from: Header #23, Support 1

SpotFtg Bm #15-1

Spot Footing 2' x 2' x 10" deep -- Bot. (3) #4 each way

Level: Basement | f'c 3,000 psi | rebar Fy 60 ksi | soil 1,500 psf | on it: 6x6 post (assumed) | ACI 318-14

PASSED

Controls: Soil Bearing Pressure 62% used
Adequacy 38.3% (capacity to spare)

WHAT LOADS IT

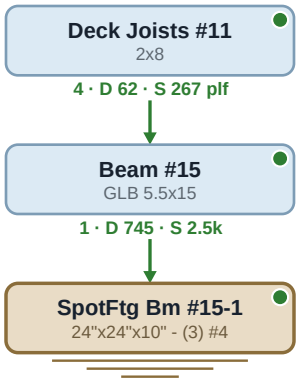

SECTION

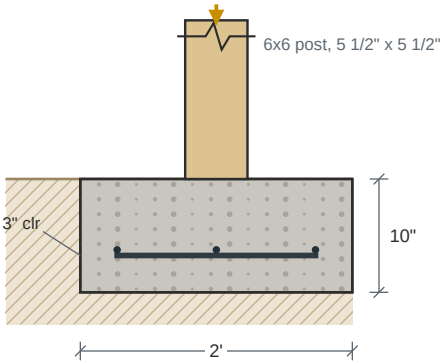

PLAN -- BOTTOM MAT

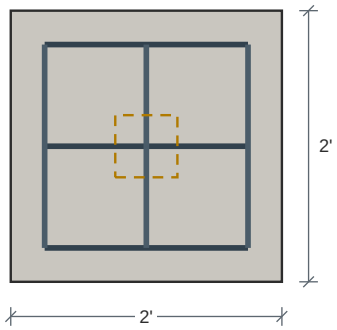

Bot. (3) #4 each way

Carrying: Dead 745 lb Snow 2,474 lb

Design Results	Actual	Allowed	Result	Method	Load Combination
Soil Bearing Pressure (psf)	926	1,500	Passed (62% used)	ASD	D+S
One-Way Shear X (lbs)	607	12,324	Passed (5% used)	LRFD	1.2D+1.6S+L
One-Way Shear Y (lbs)	607	12,324	Passed (5% used)	LRFD	1.2D+1.6S+L
Two-Way Shear (lbs)	3,639	51,267	Passed (7% used)	LRFD	1.2D+1.6S+L
Moment X (ft-lbs)	951	16,081	Passed (6% used)	LRFD	1.2D+1.6S+L
Moment Y (ft-lbs)	951	16,081	Passed (6% used)	LRFD	1.2D+1.6S+L
Crushing (lbs)	4,852	100,279	Passed (5% used)	LRFD	1.2D+1.6S+L
Depth Above Bars (in)	6 3/4"	6" min	Meets the minimum	code	ACI 318-14 13.3.1.2

Footing Specification

as entered on the footing, and the mat the check selected

Geometry	
Shape	Square
Bears on it	6x6 post (assumed)
Bearing size	5 1/2" x 5 1/2"
Footing width	2'
Footing length	2'
Footing depth	10"

Footing Properties	
Steel yield strength	60,000 psi
Concrete strength	3,000 psi
Soil bearing pressure	1,500 psf
Concrete density	145 pcf
Bottom reinf. cover	3"

Soil Properties and Post	
Soil depth above footing	0
Post	6x6 post (assumed)
Post base	fabricated
Cap	(1) HL55, p. 315

Reinforcement	
Bottom mat	Bot. (3) #4 each way
Bars along the width	(3) #4
Bars along the length	(3) #4
Selected for	moment and minimum steel
Plain concrete (no reinforcing)	No

- Soil bearing is checked at service level (ASD) and includes the footing's own weight; shear, moment and crushing at strength level (LRFD), ACI 318-14, loads combined to ASCE 7-16.
- Reinforcement is selected for the moment and for minimum steel (ACI 318-14: 0.0018 Ag for Grade 60), at no more than 3h or 18 in.
- Wood on the concrete: the wood's own bearing -- a sill or plate in Fc-perp, a post's end grain in Fc -- can govern below the concrete value; it is not checked on this sheet.

Applied Loads	Location	Trib. Width	Dead	Snow	Comments
1 - Point (lb)	--	N/A	745.2	2,474	Linked from: Beam #15, Support 1

SpotFtg Bm #15-2

Spot Footing 2' 6" x 2' 6" x 10" deep -- Bot. (3) #4 each way

Level: Basement | f'c 3,000 psi | rebar Fy 60 ksi | soil 1,500 psf | on it: 6x6 post (assumed) | ACI 318-14

PASSED

Controls: Soil Bearing Pressure 73% used
Adequacy 26.9% (capacity to spare)

WHAT LOADS IT

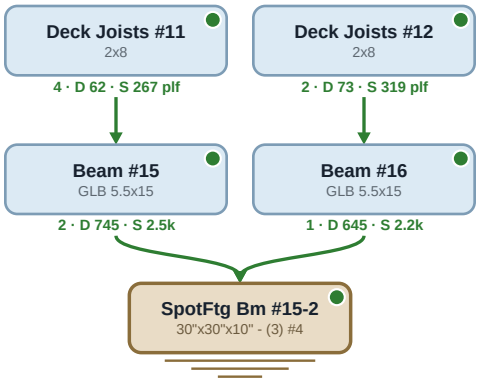

SECTION

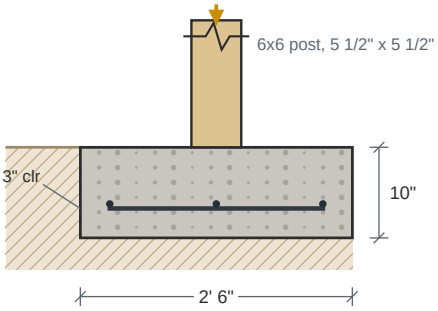

PLAN -- BOTTOM MAT

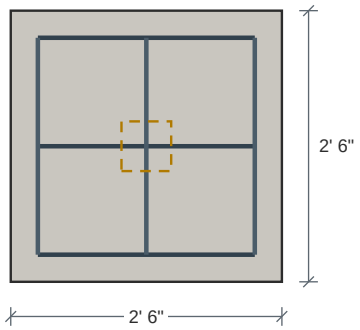

Bot. (3) #4 each way

Carrying: Dead 1,390 lb Snow 4,703 lb

Design Results	Actual	Allowed	Result	Method	Load Combination
Soil Bearing Pressure (psf)	1,096	1,500	Passed (73% used)	ASD	D+S
One-Way Shear X (lbs)	1,839	15,405	Passed (12% used)	LRFD	1.2D+1.6S+L
One-Way Shear Y (lbs)	1,839	15,405	Passed (12% used)	LRFD	1.2D+1.6S+L
Two-Way Shear (lbs)	7,723	51,267	Passed (15% used)	LRFD	1.2D+1.6S+L
Moment X (ft-lbs)	2,371	16,240	Passed (15% used)	LRFD	1.2D+1.6S+L
Moment Y (ft-lbs)	2,371	16,240	Passed (15% used)	LRFD	1.2D+1.6S+L
Crushing (lbs)	9,194	100,279	Passed (9% used)	LRFD	1.2D+1.6S+L
Depth Above Bars (in)	6 3/4"	6" min	Meets the minimum	code	ACI 318-14 13.3.1.2

Footing Specification

as entered on the footing, and the mat the check selected

Geometry	
Shape	Square
Bears on it	6x6 post (assumed)
Bearing size	5 1/2" x 5 1/2"
Footing width	2' 6"
Footing length	2' 6"
Footing depth	10"

Footing Properties	
Steel yield strength	60,000 psi
Concrete strength	3,000 psi
Soil bearing pressure	1,500 psf
Concrete density	145 pcf
Bottom reinf. cover	3"

Soil Properties and Post	
Soil depth above footing	0
Post	6x6 post (assumed)
Post base	fabricated
Cap	(2) HL55, p. 315

Reinforcement	
Bottom mat	Bot. (3) #4 each way
Bars along the width	(3) #4
Bars along the length	(3) #4
Selected for	moment and minimum steel
Plain concrete (no reinforcing)	No

- Soil bearing is checked at service level (ASD) and includes the footing's own weight; shear, moment and crushing at strength level (LRFD), ACI 318-14, loads combined to ASCE 7-16.
- Reinforcement is selected for the moment and for minimum steel (ACI 318-14: 0.0018 Ag for Grade 60), at no more than 3h or 18 in.
- Wood on the concrete: the wood's own bearing -- a sill or plate in Fc-perp, a post's end grain in Fc -- can govern below the concrete value; it is not checked on this sheet.

Applied Loads	Location	Trib. Width	Dead	Snow	Comments
1 - Point (lb)	--	N/A	645.3	2,230	Linked from: Beam #16, Support 1
2 - Point (lb)	--	N/A	745.2	2,474	Linked from: Beam #15, Support 2

SpotFtg Bm #16-2

Spot Footing 2' x 2' x 10" deep -- Bot. (3) #4 each way

Level: Basement | f'c 3,000 psi | rebar Fy 60 ksi | soil 1,500 psf | on it: 6x6 post (assumed) | ACI 318-14

PASSED

Controls: Soil Bearing Pressure 56% used
Adequacy 44% (capacity to spare)

WHAT LOADS IT

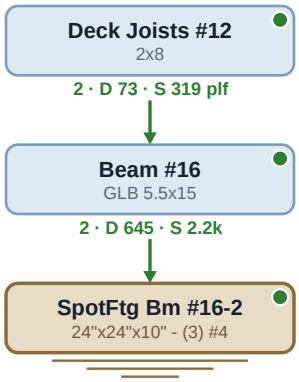

SECTION

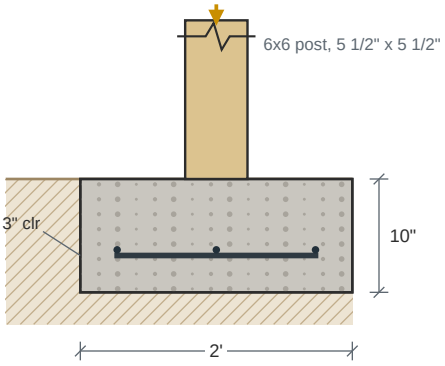

PLAN -- BOTTOM MAT

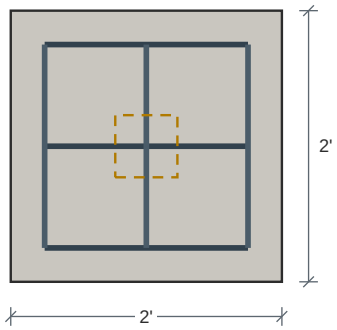

Bot. (3) #4 each way

Carrying: Dead 645 lb Snow 2,230 lb

Design Results	Actual	Allowed	Result	Method	Load Combination
Soil Bearing Pressure (psf)	840	1,500	Passed (56% used)	ASD	D+S
One-Way Shear X (lbs)	543	12,324	Passed (4% used)	LRFD	1.2D+1.6S+L
One-Way Shear Y (lbs)	543	12,324	Passed (4% used)	LRFD	1.2D+1.6S+L
Two-Way Shear (lbs)	3,256	51,267	Passed (6% used)	LRFD	1.2D+1.6S+L
Moment X (ft-lbs)	851	16,081	Passed (5% used)	LRFD	1.2D+1.6S+L
Moment Y (ft-lbs)	851	16,081	Passed (5% used)	LRFD	1.2D+1.6S+L
Crushing (lbs)	4,342	100,279	Passed (4% used)	LRFD	1.2D+1.6S+L
Depth Above Bars (in)	6 3/4"	6" min	Meets the minimum	code	ACI 318-14 13.3.1.2

Footing Specification

as entered on the footing, and the mat the check selected

Geometry	
Shape	Square
Bears on it	6x6 post (assumed)
Bearing size	5 1/2" x 5 1/2"
Footing width	2'
Footing length	2'
Footing depth	10"

Footing Properties	
Steel yield strength	60,000 psi
Concrete strength	3,000 psi
Soil bearing pressure	1,500 psf
Concrete density	145 pcf
Bottom reinf. cover	3"

Soil Properties and Post	
Soil depth above footing	0
Post	6x6 post (assumed)
Post base	fabricated
Cap	(1) HL55, p. 315

Reinforcement	
Bottom mat	Bot. (3) #4 each way
Bars along the width	(3) #4
Bars along the length	(3) #4
Selected for	moment and minimum steel
Plain concrete (no reinforcing)	No

- Soil bearing is checked at service level (ASD) and includes the footing's own weight; shear, moment and crushing at strength level (LRFD), ACI 318-14, loads combined to ASCE 7-16.
- Reinforcement is selected for the moment and for minimum steel (ACI 318-14: 0.0018 Ag for Grade 60), at no more than 3h or 18 in.
- Wood on the concrete: the wood's own bearing -- a sill or plate in Fc-perp, a post's end grain in Fc -- can govern below the concrete value; it is not checked on this sheet.

Applied Loads	Location	Trib. Width	Dead	Snow	Comments
1 - Point (lb)	--	N/A	645.3	2,230	Linked from: Beam #16, Support 2

SpotFtg Bm #17-2

Spot Footing 1' 6" x 1' 6" x 10" deep -- Bot. (2) #4 each way

Level: Basement | f'c 3,000 psi | rebar Fy 60 ksi | soil 1,500 psf | on it: 6x6 post (assumed) | ACI 318-14

PASSED

Controls: Soil Bearing Pressure 91% used

Adequacy 9.1% (capacity to spare)

WHAT LOADS IT

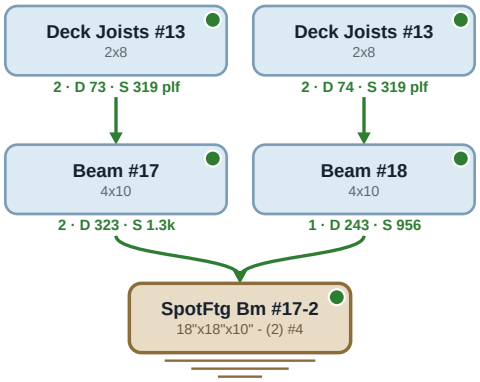

SECTION

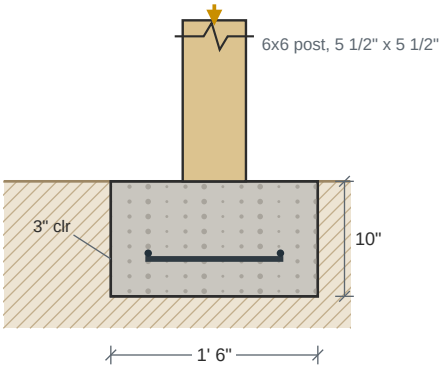

PLAN -- BOTTOM MAT

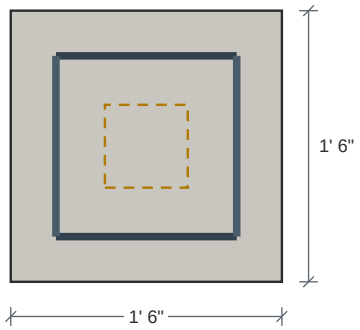

Bot. (2) #4 each way

Carrying: Dead 566 lb Snow 2,230 lb Floor Live 0 lb

Design Results	Actual	Allowed	Result	Method	Load Combination
Soil Bearing Pressure (psf)	1,363	1,500	Passed (91% used)	ASD	D+S
One-Way Shear X (lbs)	0	9,243	Passed (0% used)	LRFD	1.2D+1.6S+L
One-Way Shear Y (lbs)	0	9,243	Passed (0% used)	LRFD	1.2D+1.6S+L
Two-Way Shear (lbs)	2,359	51,267	Passed (5% used)	LRFD	1.2D+1.6S+L
Moment X (ft-lbs)	572	10,779	Passed (5% used)	LRFD	1.2D+1.6S+L
Moment Y (ft-lbs)	572	10,779	Passed (5% used)	LRFD	1.2D+1.6S+L
Crushing (lbs)	4,247	100,279	Passed (4% used)	LRFD	1.2D+1.6S+L
Depth Above Bars (in)	6 3/4"	6" min	Meets the minimum	code	ACI 318-14 13.3.1.2

Footing Specification

as entered on the footing, and the mat the check selected

Geometry	
Shape	Square
Bears on it	6x6 post (assumed)
Bearing size	5 1/2" x 5 1/2"
Footing width	1' 6"
Footing length	1' 6"
Footing depth	10"

Footing Properties	
Steel yield strength	60,000 psi
Concrete strength	3,000 psi
Soil bearing pressure	1,500 psf
Concrete density	145 pcf
Bottom reinf. cover	3"

Soil Properties and Post	
Soil depth above footing	0
Post	6x6 post (assumed)
Post base	fabricated
Cap	TimberLOK 15" + (2) HL33, p. 315

Reinforcement	
Bottom mat	Bot. (2) #4 each way
Bars along the width	(2) #4
Bars along the length	(2) #4
Selected for	moment and minimum steel
Plain concrete (no reinforcing)	No

- Soil bearing is checked at service level (ASD) and includes the footing's own weight; shear, moment and crushing at strength level (LRFD), ACI 318-14, loads combined to ASCE 7-16.
- Reinforcement is selected for the moment and for minimum steel (ACI 318-14: 0.0018 Ag for Grade 60), at no more than 3h or 18 in.
- Wood on the concrete: the wood's own bearing -- a sill or plate in Fc-perp, a post's end grain in Fc -- can govern below the concrete value; it is not checked on this sheet.

Applied Loads	Location	Trib. Width	Dead	Floor Live	Snow	Comments
1 - Point (lb)	--	N/A	323.1	0	1,274	Linked from: Beam #17, Support 2
2 - Point (lb)	--	N/A	242.8	--	955.6	Linked from: Beam #18, Support 1

SpotFtg Bm #18-2

Spot Footing 2' x 2' x 10" deep -- Bot. (3) #4 each way

Level: Basement | f'c 3,000 psi | rebar Fy 60 ksi | soil 1,500 psf | on it: 6x6 post (assumed) | ACI 318-14

PASSED

Controls: Soil Bearing Pressure 75% used
Adequacy 25.4% (capacity to spare)

WHAT LOADS IT

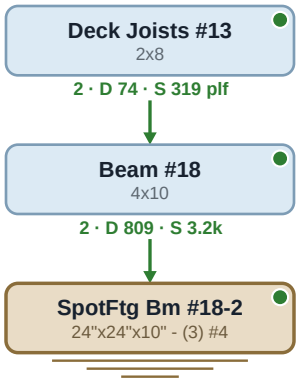

SECTION

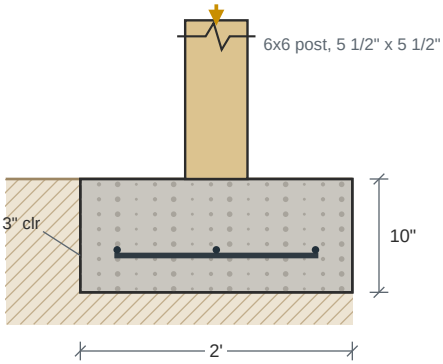

PLAN -- BOTTOM MAT

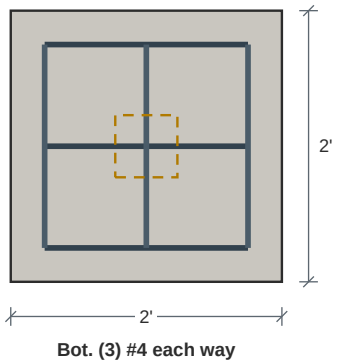

Bot. (3) #4 each way

Carrying: Dead 809 lb Snow 3,185 lb

Design Results	Actual	Allowed	Result	Method	Load Combination
Soil Bearing Pressure (psf)	1,120	1,500	Passed (75% used)	ASD	D+S
One-Way Shear X (lbs)	758	12,324	Passed (6% used)	LRFD	1.2D+1.6S+L
One-Way Shear Y (lbs)	758	12,324	Passed (6% used)	LRFD	1.2D+1.6S+L
Two-Way Shear (lbs)	4,551	51,267	Passed (9% used)	LRFD	1.2D+1.6S+L
Moment X (ft-lbs)	1,189	16,081	Passed (7% used)	LRFD	1.2D+1.6S+L
Moment Y (ft-lbs)	1,189	16,081	Passed (7% used)	LRFD	1.2D+1.6S+L
Crushing (lbs)	6,068	100,279	Passed (6% used)	LRFD	1.2D+1.6S+L
Depth Above Bars (in)	6 3/4"	6" min	Meets the minimum	code	ACI 318-14 13.3.1.2

Footing Specification

as entered on the footing, and the mat the check selected

Geometry	
Shape	Square
Bears on it	6x6 post (assumed)
Bearing size	5 1/2" x 5 1/2"
Footing width	2'
Footing length	2'
Footing depth	10"

Footing Properties	
Steel yield strength	60,000 psi
Concrete strength	3,000 psi
Soil bearing pressure	1,500 psf
Concrete density	145 pcf
Bottom reinf. cover	3"

Soil Properties and Post	
Soil depth above footing	0
Post	6x6 post (assumed)
Post base	fabricated
Cap	TimberLOK 15" + (2) HL33, p. 315

Reinforcement	
Bottom mat	Bot. (3) #4 each way
Bars along the width	(3) #4
Bars along the length	(3) #4
Selected for	moment and minimum steel
Plain concrete (no reinforcing)	No

- Soil bearing is checked at service level (ASD) and includes the footing's own weight; shear, moment and crushing at strength level (LRFD), ACI 318-14, loads combined to ASCE 7-16.
- Reinforcement is selected for the moment and for minimum steel (ACI 318-14: 0.0018 Ag for Grade 60), at no more than 3h or 18 in.
- Wood on the concrete: the wood's own bearing -- a sill or plate in Fc-perp, a post's end grain in Fc -- can govern below the concrete value; it is not checked on this sheet.

Applied Loads	Location	Trib. Width	Dead	Snow	Comments
1 - Point (lb)	--	N/A	809.4	3,185	Linked from: Beam #18, Support 2

SpotFtg Bm #18-3

Spot Footing 1' 6" x 1' 6" x 10" deep -- Bot. (2) #4 each way

Level: Basement | f'c 3,000 psi | rebar Fy 60 ksi | soil 1,500 psf | on it: 6x6 post (assumed) | ACI 318-14

PASSED

Controls: Soil Bearing Pressure 44% used
Adequacy 56.4% (capacity to spare)

WHAT LOADS IT

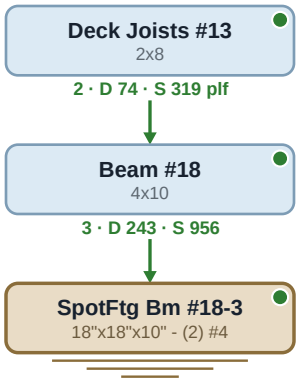

SECTION

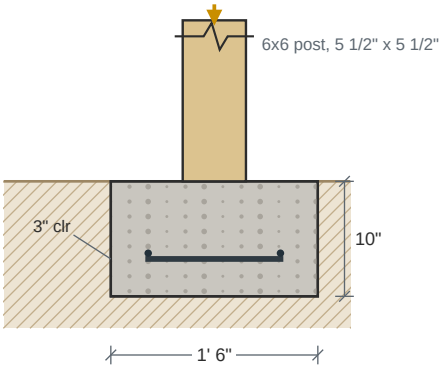

PLAN -- BOTTOM MAT

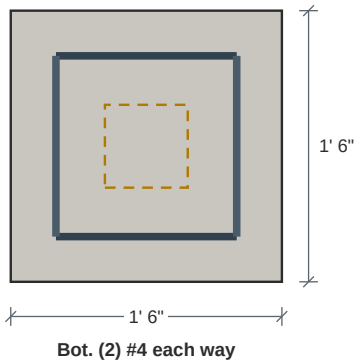

Bot. (2) #4 each way

Carrying: Dead 243 lb Snow 956 lb

Design Results	Actual	Allowed	Result	Method	Load Combination
Soil Bearing Pressure (psf)	653	1,500	Passed (44% used)	ASD	D+S
One-Way Shear X (lbs)	0	9,243	Passed (0% used)	LRFD	1.2D+1.6S+L
One-Way Shear Y (lbs)	0	9,243	Passed (0% used)	LRFD	1.2D+1.6S+L
Two-Way Shear (lbs)	1,011	51,267	Passed (2% used)	LRFD	1.2D+1.6S+L
Moment X (ft-lbs)	245	10,779	Passed (2% used)	LRFD	1.2D+1.6S+L
Moment Y (ft-lbs)	245	10,779	Passed (2% used)	LRFD	1.2D+1.6S+L
Crushing (lbs)	1,820	100,279	Passed (2% used)	LRFD	1.2D+1.6S+L
Depth Above Bars (in)	6 3/4"	6" min	Meets the minimum	code	ACI 318-14 13.3.1.2

Footing Specification

as entered on the footing, and the mat the check selected

Geometry	
Shape	Square
Bears on it	6x6 post (assumed)
Bearing size	5 1/2" x 5 1/2"
Footing width	1' 6"
Footing length	1' 6"
Footing depth	10"

Footing Properties	
Steel yield strength	60,000 psi
Concrete strength	3,000 psi
Soil bearing pressure	1,500 psf
Concrete density	145 pcf
Bottom reinf. cover	3"

Soil Properties and Post	
Soil depth above footing	0
Post	6x6 post (assumed)
Post base	fabricated
Cap	TimberLOK 15" + (1) HL33, p. 315

Reinforcement	
Bottom mat	Bot. (2) #4 each way
Bars along the width	(2) #4
Bars along the length	(2) #4
Selected for	moment and minimum steel
Plain concrete (no reinforcing)	No

- Soil bearing is checked at service level (ASD) and includes the footing's own weight; shear, moment and crushing at strength level (LRFD), ACI 318-14, loads combined to ASCE 7-16.
- Reinforcement is selected for the moment and for minimum steel (ACI 318-14: 0.0018 Ag for Grade 60), at no more than 3h or 18 in.
- Wood on the concrete: the wood's own bearing -- a sill or plate in Fc-perp, a post's end grain in Fc -- can govern below the concrete value; it is not checked on this sheet.

Applied Loads	Location	Trib. Width	Dead	Snow	Comments
1 - Point (lb)	--	N/A	242.8	955.7	Linked from: Beam #18, Support 3

SpotFtg Bm #20-1

PASSED

Spot Footing 2' x 2' x 10" deep -- Unreinforced (Plain)

Level: Basement | f'c 3,000 psi | soil 1,500 psf | on it: Beam #20 in a beam pocket in a 2x6 wall, on a (3)-stud pack | ACI 318-14

Controls: Soil Bearing Pressure 48% used
Adequacy 51.9% (capacity to spare)

WHAT LOADS IT

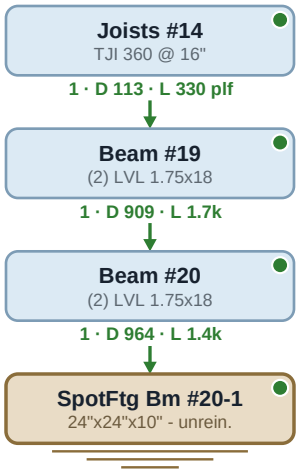

SECTION

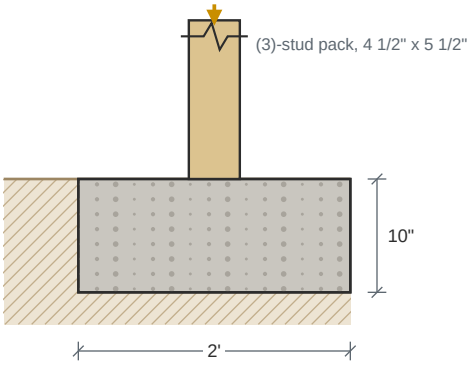

PLAN -- PLAIN CONCRETE, NO REINFORCING

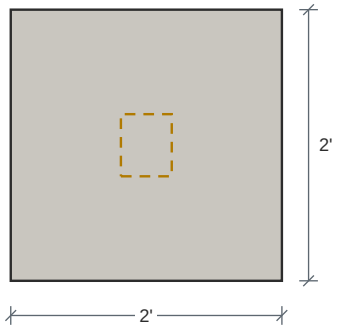

Unreinforced (Plain)

Carrying: Dead 964 lb Floor Live 1,437 lb

Design Results	Actual	Allowed	Result	Method	Load Combination
Soil Bearing Pressure (psf)	721	1,500	Passed (48% used)	ASD	D+L
One-Way Shear X (lbs)	180	8,413	Passed (2% used)	LRFD	1.2D+1.6L+0.5Lr
One-Way Shear Y (lbs)	252	8,413	Passed (3% used)	LRFD	1.2D+1.6L+0.5Lr
Two-Way Shear (lbs)	2,444	36,365	Passed (7% used)	LRFD	1.2D+1.6L+0.5Lr
Moment X (ft-lbs)	677	3,505	Passed (19% used)	LRFD	1.2D+1.6L+0.5Lr
Moment Y (ft-lbs)	710	3,505	Passed (20% used)	LRFD	1.2D+1.6L+0.5Lr
Crushing (lbs)	3,456	75,735	Passed (5% used)	LRFD	1.2D+1.6L+0.5Lr
Minimum Thickness (in)	10"	8" min	Meets the minimum	code	ACI 318-14 Ch. 14

Footing Specification

as entered on the footing, and the mat the check selected

Geometry	
Shape	Square
Bears on it	Beam #20 in a beam pocket in a 2x6 wall, on a (3)-stud pack
Bearing size	4 1/2" x 5 1/2"
Footing width	2'
Footing length	2'
Footing depth	10"

Footing Properties	
Concrete strength	3,000 psi
Soil bearing pressure	1,500 psf
Concrete density	145 pcf

Soil Properties	
Soil depth above footing	0

Reinforcement	
Reinforcing	none -- plain concrete
Plain concrete (no reinforcing)	Yes

- Soil bearing is checked at service level (ASD) and includes the footing's own weight; shear, moment and crushing at strength level (LRFD), ACI 318-14, loads combined to ASCE 7-16.
- Wood on the concrete: the wood's own bearing -- a sill or plate in Fc-perp, a post's end grain in Fc -- can govern below the concrete value; it is not checked on this sheet.

Applied Loads	Location	Trib. Width	Dead	Floor Live	Comments
1 - Point (lb)	--	N/A	964	1,437	Linked from: Beam #20, Support 1

SpotFtg Bm #20-2

Spot Footing 1' 4" x 1' 4" x 10" deep -- Unreinforced (Plain)

Level: Basement | f'c 3,000 psi | soil 1,500 psf | on it: Beam #20 in a beam pocket in a 2x6 wall, on a (3)-stud pack | ACI 318-14

PASSED

Controls: Soil Bearing Pressure 27% used
Adequacy 72.7% (capacity to spare)

WHAT LOADS IT

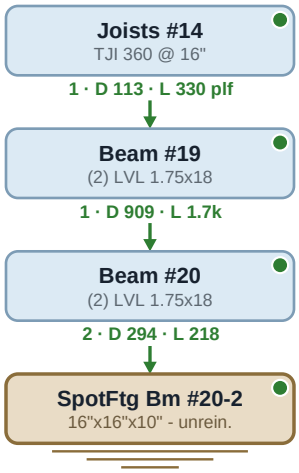

SECTION

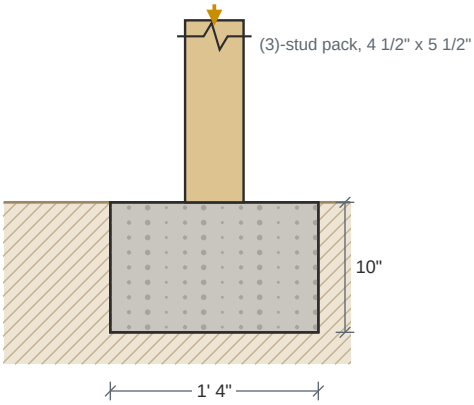

PLAN -- PLAIN CONCRETE, NO REINFORCING

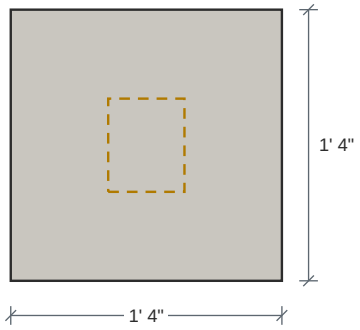

Unreinforced (Plain)

Carrying: Floor Live 218 lb Dead 294 lb

Design Results	Actual	Allowed	Result	Method	Load Combination
Soil Bearing Pressure (psf)	409	1,500	Passed (27% used)	ASD	D+L
Two-Way Shear (lbs)	239	36,365	Passed (1% used)	LRFD	1.2D+1.6L+0.5Lr
Moment X (ft-lbs)	80	2,337	Passed (3% used)	LRFD	1.2D+1.6L+0.5Lr
Moment Y (ft-lbs)	86	2,337	Passed (4% used)	LRFD	1.2D+1.6L+0.5Lr
Crushing (lbs)	701	75,735	Passed (1% used)	LRFD	1.2D+1.6L+0.5Lr
Minimum Thickness (in)	10"	8" min	Meets the minimum	code	ACI 318-14 Ch. 14

Footing Specification

as entered on the footing, and the mat the check selected

Geometry	
Shape	Square
Bears on it	Beam #20 in a beam pocket in a 2x6 wall, on a (3)-stud pack
Bearing size	4 1/2" x 5 1/2"
Footing width	1' 4"
Footing length	1' 4"
Footing depth	10"

Footing Properties	
Concrete strength	3,000 psi
Soil bearing pressure	1,500 psf
Concrete density	145 pcf

Soil Properties	
Soil depth above footing	0

Reinforcement	
Reinforcing	none -- plain concrete
Plain concrete (no reinforcing)	Yes

- Soil bearing is checked at service level (ASD) and includes the footing's own weight; shear, moment and crushing at strength level (LRFD), ACI 318-14, loads combined to ASCE 7-16.
- Wood on the concrete: the wood's own bearing -- a sill or plate in Fc-perp, a post's end grain in Fc -- can govern below the concrete value; it is not checked on this sheet.

Applied Loads	Location	Trib. Width	Dead	Floor Live	Comments
1 - Point (lb)	--	N/A	294.2	217.8	Linked from: Beam #20, Support 2

SpotFtg Bm #21-1

PASSED

Spot Footing 2' x 2' x 10" deep -- Unreinforced (Plain)

Level: Basement | f'c 3,000 psi | soil 1,500 psf | on it: Beam #21 in a beam pocket in a 2x6 wall, on a (3)-stud pack | ACI 318-14

Controls: Soil Bearing Pressure 48% used
Adequacy 51.9% (capacity to spare)

WHAT LOADS IT

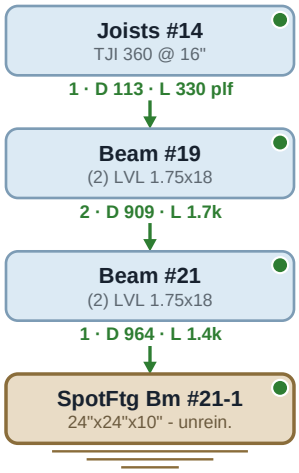

SECTION

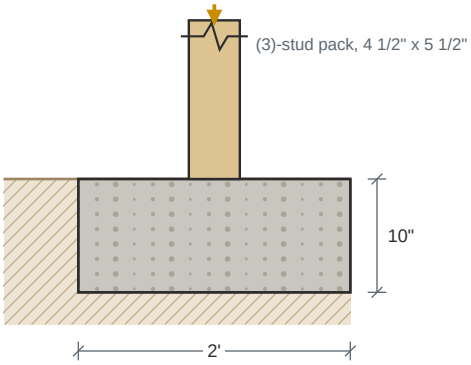

PLAN -- PLAIN CONCRETE, NO REINFORCING

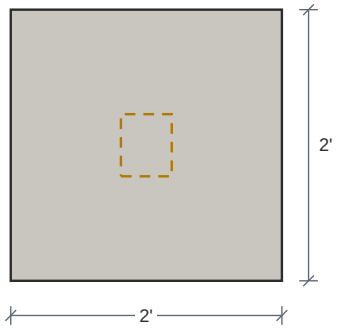

Unreinforced (Plain)

Carrying: Floor Live 1,437 lb Dead 964 lb

Design Results	Actual	Allowed	Result	Method	Load Combination
Soil Bearing Pressure (psf)	721	1,500	Passed (48% used)	ASD	D+L
One-Way Shear X (lbs)	180	8,413	Passed (2% used)	LRFD	1.2D+1.6L+0.5Lr
One-Way Shear Y (lbs)	252	8,413	Passed (3% used)	LRFD	1.2D+1.6L+0.5Lr
Two-Way Shear (lbs)	2,444	36,365	Passed (7% used)	LRFD	1.2D+1.6L+0.5Lr
Moment X (ft-lbs)	677	3,505	Passed (19% used)	LRFD	1.2D+1.6L+0.5Lr
Moment Y (ft-lbs)	710	3,505	Passed (20% used)	LRFD	1.2D+1.6L+0.5Lr
Crushing (lbs)	3,456	75,735	Passed (5% used)	LRFD	1.2D+1.6L+0.5Lr
Minimum Thickness (in)	10"	8" min	Meets the minimum	code	ACI 318-14 Ch. 14

Footing Specification

as entered on the footing, and the mat the check selected

Geometry	
Shape	Square
Bears on it	Beam #21 in a beam pocket in a 2x6 wall, on a (3)-stud pack
Bearing size	4 1/2" x 5 1/2"
Footing width	2'
Footing length	2'
Footing depth	10"

Footing Properties	
Concrete strength	3,000 psi
Soil bearing pressure	1,500 psf
Concrete density	145 pcf

Soil Properties	
Soil depth above footing	0

Reinforcement	
Reinforcing	none -- plain concrete
Plain concrete (no reinforcing)	Yes

- Soil bearing is checked at service level (ASD) and includes the footing's own weight; shear, moment and crushing at strength level (LRFD), ACI 318-14, loads combined to ASCE 7-16.
- Wood on the concrete: the wood's own bearing -- a sill or plate in Fc-perp, a post's end grain in Fc -- can govern below the concrete value; it is not checked on this sheet.

Applied Loads	Location	Trib. Width	Dead	Floor Live	Comments
1 - Point (lb)	--	N/A	964	1,437	Linked from: Beam #21, Support 1

SpotFtg Bm #21-2

PASSED

Spot Footing 1' 4" x 1' 4" x 10" deep -- Unreinforced (Plain)

Controls: Soil Bearing Pressure 27% used

Adequacy 72.7% (capacity to spare)

Level: Basement | f'c 3,000 psi | soil 1,500 psf | on it: Beam #21 in a beam pocket in a 2x6 wall, on a (3)-stud pack | ACI 318-14

WHAT LOADS IT

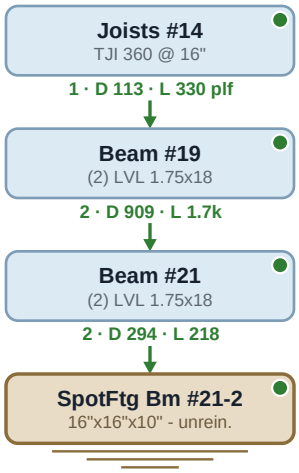

SECTION

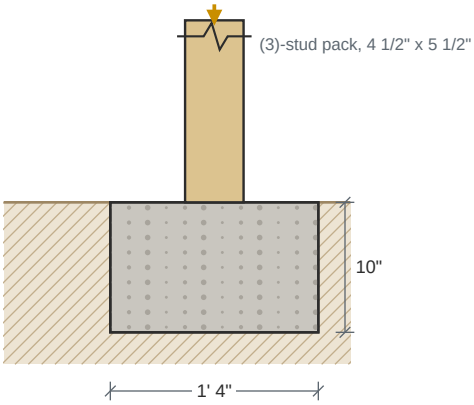

PLAN -- PLAIN CONCRETE, NO REINFORCING

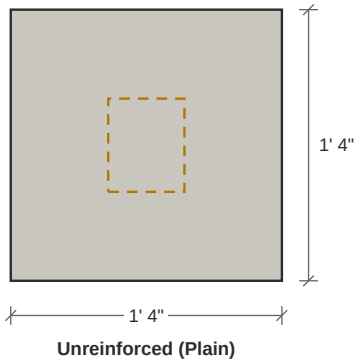

Unreinforced (Plain)

Carrying: Floor Live 218 lb Dead 294 lb

Design Results	Actual	Allowed	Result	Method	Load Combination
Soil Bearing Pressure (psf)	409	1,500	Passed (27% used)	ASD	D+L
Two-Way Shear (lbs)	239	36,365	Passed (1% used)	LRFD	1.2D+1.6L+0.5Lr
Moment X (ft-lbs)	80	2,337	Passed (3% used)	LRFD	1.2D+1.6L+0.5Lr
Moment Y (ft-lbs)	86	2,337	Passed (4% used)	LRFD	1.2D+1.6L+0.5Lr
Crushing (lbs)	701	75,735	Passed (1% used)	LRFD	1.2D+1.6L+0.5Lr
Minimum Thickness (in)	10"	8" min	Meets the minimum	code	ACI 318-14 Ch. 14

Footing Specification

as entered on the footing, and the mat the check selected

Geometry	
Shape	Square
Bears on it	Beam #21 in a beam pocket in a 2x6 wall, on a (3)-stud pack
Bearing size	4 1/2" x 5 1/2"
Footing width	1' 4"
Footing length	1' 4"
Footing depth	10"

Footing Properties	
Concrete strength	3,000 psi
Soil bearing pressure	1,500 psf
Concrete density	145 pcf

Soil Properties	
Soil depth above footing	0

Reinforcement	
Reinforcing	none -- plain concrete
Plain concrete (no reinforcing)	Yes

- Soil bearing is checked at service level (ASD) and includes the footing's own weight; shear, moment and crushing at strength level (LRFD), ACI 318-14, loads combined to ASCE 7-16.
- Wood on the concrete: the wood's own bearing -- a sill or plate in Fc-perp, a post's end grain in Fc -- can govern below the concrete value; it is not checked on this sheet.

Applied Loads	Location	Trib. Width	Dead	Floor Live	Comments
1 - Point (lb)	--	N/A	294.2	217.8	Linked from: Beam #21, Support 2

SpotFtg Gdr #1-2

PASSED

Spot Footing 1' 4" x 4' 6" x 10" deep -- Bot. (7) #4 the short way, (2) #4 the long way - 3 of the short-way bars in the center 1' 4"

Controls: Soil Bearing Pressure 11% used
Adequacy 88.7% (capacity to spare)

Level: Basement | f'c 3,000 psi | rebar Fy 60 ksi | soil 1,500 psf | on it: Girder #1 through a 2x4 stud wall, on a (3)-stud pack | ACI 318-14

WHAT LOADS IT

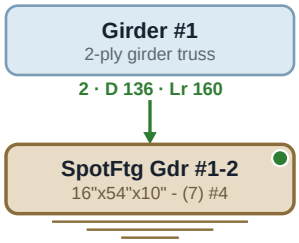

SECTION

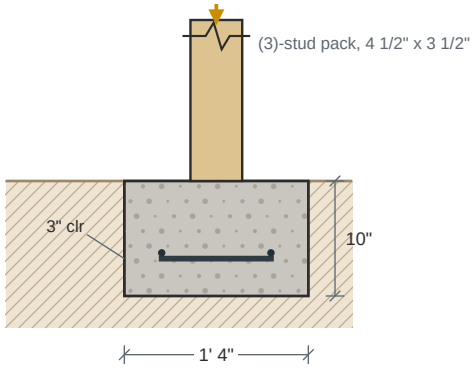

PLAN -- BOTTOM MAT

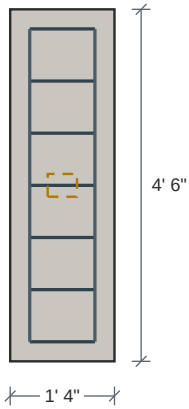

Carrying: Dead 136 lb Roof Live 160 lb

Bot. (7) #4 the short way, (2) #4 the long way - 3 of the short-way bars in the center 1' 4"

Design Results	Actual	Allowed	Result	Method	Load Combination
Soil Bearing Pressure (psf)	170	1,500	Passed (11% used)	ASD	D+Lr
One-Way Shear X (lbs)	147	8,216	Passed (2% used)	LRFD	1.2D+1.6Lr+L
One-Way Shear Y (lbs)	0	27,728	Passed (0% used)	LRFD	1.2D+1.6Lr+L
Two-Way Shear (lbs)	366	44,858	Passed (1% used)	LRFD	1.2D+1.6Lr+L
Moment X (ft-lbs)	221	10,721	Passed (2% used)	LRFD	1.2D+1.6Lr+L
Moment Y (ft-lbs)	52	37,453	Passed (0% used)	LRFD	1.2D+1.6Lr+L
Crushing (lbs)	419	52,211	Passed (1% used)	LRFD	1.2D+1.6Lr+L
Depth Above Bars (in)	6 3/4"	6" min	Meets the minimum	code	ACI 318-14 13.3.1.2

Footing Specification

as entered on the footing, and the mat the check selected

Geometry	
Shape	Rectangular
Bears on it	Girder #1 through a 2x4 stud wall, on a (3)-stud pack
Bearing size	4 1/2" x 3 1/2"
Footing width	1' 4"
Footing length	4' 6"
Footing depth	10"

Footing Properties	
Steel yield strength	60,000 psi
Concrete strength	3,000 psi
Soil bearing pressure	1,500 psf
Concrete density	145 pcf
Bottom reinf. cover	3"

Soil Properties	
Soil depth above footing	0

Reinforcement	
Bottom mat	Bot. (7) #4 the short way, (2) #4 the long way - 3 of the short-way bars in the center 1' 4"
Bars the short way	(7) #4
Bars the long way	(2) #4
Selected for	moment and minimum steel
Plain concrete (no reinforcing)	No

- Soil bearing is checked at service level (ASD) and includes the footing's own weight; shear, moment and crushing at strength level (LRFD), ACI 318-14, loads combined to ASCE 7-16.
- Reinforcement is selected for the moment and for minimum steel (ACI 318-14: 0.0018 Ag for Grade 60), at no more than 3h or 18 in.
- Which way round the bearing sits on the pad is not known: it is checked both ways and the worse is shown.
- Wood on the concrete: the wood's own bearing -- a sill or plate in Fc-perp, a post's end grain in Fc -- can govern below the concrete value; it is not checked on this sheet.

Applied Loads	Location	Trib. Width	Dead	Roof Live	Comments
1 - Point (lb)	--	N/A	136	160	Linked from: Girder #1, Support 2

SpotFtg Gdr #3-2

PASSED

Spot Footing 1' 4" x 4' 6" x 10" deep -- Bot. (7) #4 the short way, (2) #4 the long way - 3 of the short-way bars in the center 1' 4"

Controls: Soil Bearing Pressure 22% used
Adequacy 78.3% (capacity to spare)

Level: Basement | f'c 3,000 psi | rebar Fy 60 ksi | soil 1,500 psf | on it: Girder #3 through a 2x4 stud wall, on a (3)-stud pack | ACI 318-14

WHAT LOADS IT

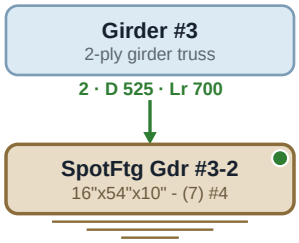

SECTION

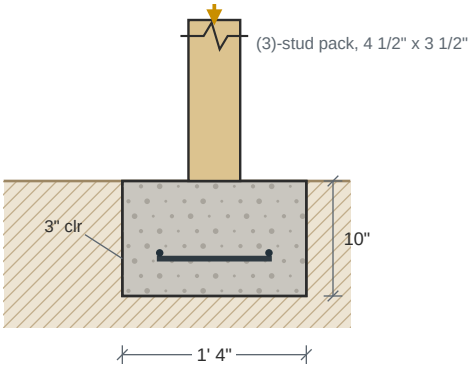

PLAN -- BOTTOM MAT

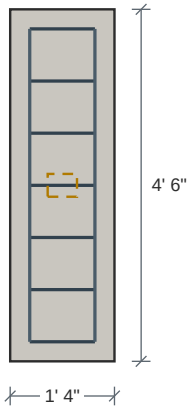

Carrying: Dead 525 lb Roof Live 700 lb

Bot. (7) #4 the short way, (2) #4 the long way - 3 of the short-way bars in the center 1' 4"

Design Results	Actual	Allowed	Result	Method	Load Combination
Soil Bearing Pressure (psf)	325	1,500	Passed (22% used)	ASD	D+Lr
One-Way Shear X (lbs)	616	8,216	Passed (7% used)	LRFD	1.2D+1.6Lr+L
One-Way Shear Y (lbs)	0	27,728	Passed (0% used)	LRFD	1.2D+1.6Lr+L
Two-Way Shear (lbs)	1,527	44,858	Passed (3% used)	LRFD	1.2D+1.6Lr+L
Moment X (ft-lbs)	922	10,721	Passed (9% used)	LRFD	1.2D+1.6Lr+L
Moment Y (ft-lbs)	215	37,453	Passed (1% used)	LRFD	1.2D+1.6Lr+L
Crushing (lbs)	1,750	52,211	Passed (3% used)	LRFD	1.2D+1.6Lr+L
Depth Above Bars (in)	6 3/4"	6" min	Meets the minimum	code	ACI 318-14 13.3.1.2

Footing Specification

as entered on the footing, and the mat the check selected

Geometry	
Shape	Rectangular
Bears on it	Girder #3 through a 2x4 stud wall, on a (3)-stud pack
Bearing size	4 1/2" x 3 1/2"
Footing width	1' 4"
Footing length	4' 6"
Footing depth	10"

Footing Properties	
Steel yield strength	60,000 psi
Concrete strength	3,000 psi
Soil bearing pressure	1,500 psf
Concrete density	145 pcf
Bottom reinf. cover	3"

Soil Properties	
Soil depth above footing	0

Reinforcement	
Bottom mat	Bot. (7) #4 the short way, (2) #4 the long way - 3 of the short-way bars in the center 1' 4"
Bars the short way	(7) #4
Bars the long way	(2) #4
Selected for	moment and minimum steel
Plain concrete (no reinforcing)	No

- Soil bearing is checked at service level (ASD) and includes the footing's own weight; shear, moment and crushing at strength level (LRFD), ACI 318-14, loads combined to ASCE 7-16.
- Reinforcement is selected for the moment and for minimum steel (ACI 318-14: 0.0018 Ag for Grade 60), at no more than 3h or 18 in.
- Which way round the bearing sits on the pad is not known: it is checked both ways and the worse is shown.
- Wood on the concrete: the wood's own bearing -- a sill or plate in Fc-perp, a post's end grain in Fc -- can govern below the concrete value; it is not checked on this sheet.

Applied Loads	Location	Trib. Width	Dead	Roof Live	Comments
1 - Point (lb)	--	N/A	525	700	Linked from: Girder #3, Support 2

SpotFtg Hdr 9-1

Spot Footing 3' x 1' 4" x 10" deep -- Unreinforced (Plain)

Level: Basement | f'c 3,000 psi | soil 1,500 psf | in a foundation wall (6" x 24" stem, typed) | on it: Header #9 on (1) trimmer; Header #10 on (1) trimmer; Header #22 on (1) trimmer -- side by side, 4 1/2 x 4 1/2 together | ACI 318-14

PASSED

Controls: Moment Y 94% used

Adequacy 5.6% (capacity to spare)

What Loads It

click a box to go to that member

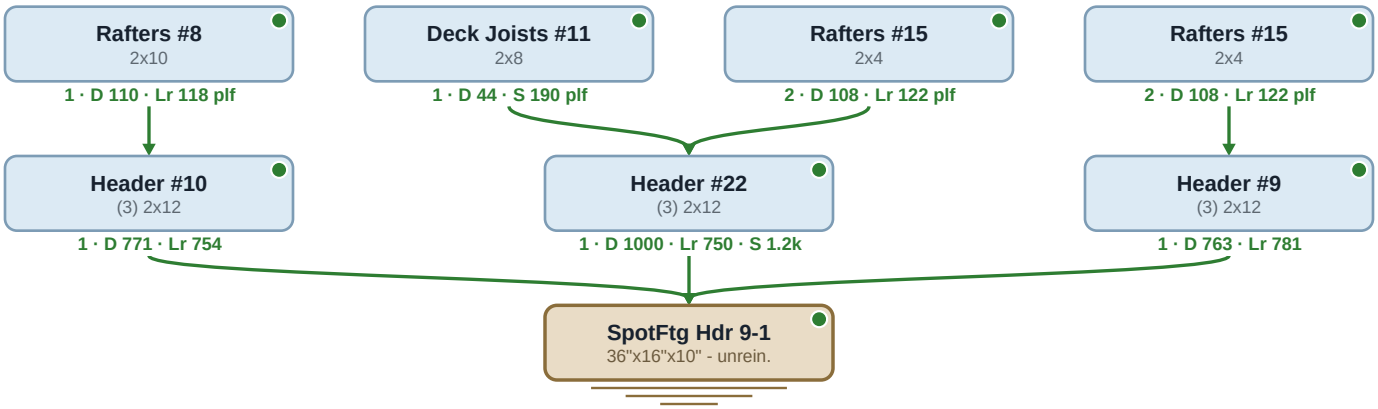

ELEVATION IN THE FOUNDATION WALL

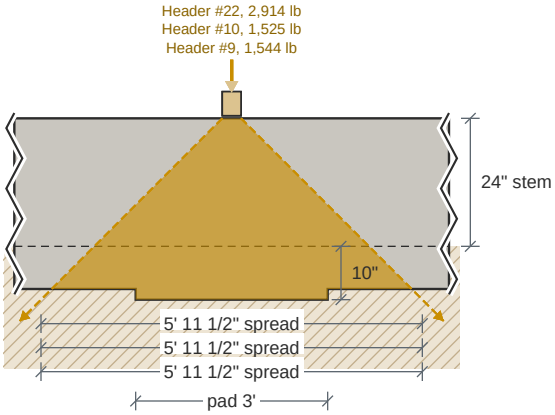

Concrete under the loads: bearing 5% used; where they overlap 15% (ACI 318-14 22.8)

PLAN -- PLAIN CONCRETE, NO REINFORCING

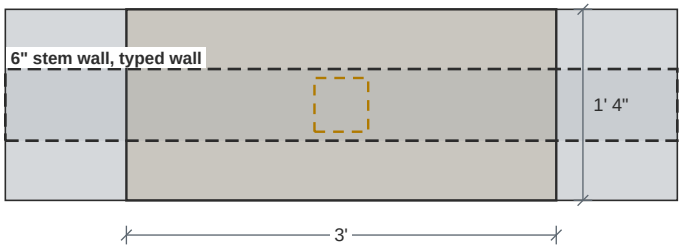

Unreinforced (Plain)

Carrying: Dead 2,534 lb Roof Live 2,285 lb Snow 1,164 lb

Design Results	Actual	Allowed	Result	Method	Load Combination
Soil Bearing Pressure (psf)	1,325	1,500	Passed (88% used)	ASD	D+Lr
One-Way Shear Y (lbs)	1,442	5,609	Passed (26% used)	LRFD	1.2D+1.6Lr+L
Two-Way Shear (lbs)	4,880	34,967	Passed (14% used)	LRFD	1.2D+1.6Lr+L
Moment X (ft-lbs)	824	5,258	Passed (16% used)	LRFD	1.2D+1.6Lr+L
Moment Y (ft-lbs)	2,207	2,337	Passed (94% used)	LRFD	1.2D+1.6Lr+L
Crushing (lbs)	6,696	61,965	Passed (11% used)	LRFD	1.2D+1.6Lr+L
Minimum Thickness (in)	10"	8" min	Meets the minimum	code	ACI 318-14 Ch. 14

Footing Specification

as entered on the footing, and the mat the check selected

Geometry	
Shape	Rectangular
Bears on it	Header #9 on (1) trimmer; Header #10 on (1) trimmer; Header #22 on (1) trimmer -- side by side, 4 1/2 x 4 1/2 together
Bearing size	4 1/2" x 4 1/2"
Footing width	3'
Footing length	1' 4"
Footing depth	10"

Footing Properties	
Concrete strength	3,000 psi
Soil bearing pressure	1,500 psf
Concrete density	145 pcf

SpotFtg Hdr 9-1 (continued)

Spot Footing | 3' x 1' 4" x 10" deep -- Unreinforced (Plain)

Soil Properties	
Soil depth above footing	0

Reinforcement	
Reinforcing	none -- plain concrete
Plain concrete (no reinforcing)	Yes

- Soil bearing is checked at service level (ASD) and includes the footing's own weight; shear, moment and crushing at strength level (LRFD), ACI 318-14, loads combined to ASCE 7-16.
- The members on this pad are not placed on it (Load locations): their bearings are taken side by side at the pad's column, one footprint. Place them to check each where it lands.
- Wood on the concrete: the wood's own bearing -- a sill or plate in Fc-perp, a post's end grain in Fc -- can govern below the concrete value; it is not checked on this sheet.

Applied Loads	Location	Trib. Width	Dead	Roof Live	Snow	Comments
1 - Point (lb)	--	N/A	763	781	--	Linked from: Header #9, Support 1
2 - Point (lb)	--	N/A	999.6	750.3	1,164	Linked from: Header #22, Support 1
3 - Point (lb)	--	N/A	771	753.7	--	Linked from: Header #10, Support 1

SpotFtg Hdr #1-1

PASSED

Spot Footing 1' 4" x 2' x 11" deep -- Unreinforced (Plain)

Level: Basement | f'c 3,000 psi | soil 1,500 psf | in a foundation wall (6" x 24" stem, Footing #11) | on it: Header #1 on (1) trimmer | ACI 318-14

Controls: Soil Bearing Pressure 39% used
Adequacy 61.4% (capacity to spare)

WHAT LOADS IT

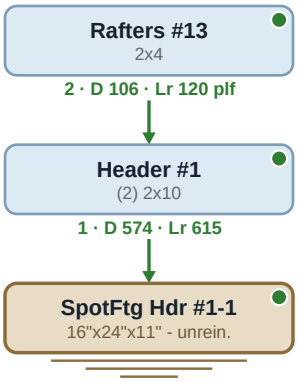

ELEVATION IN THE FOUNDATION WALL

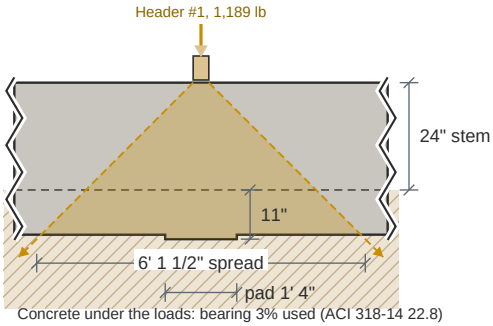

PLAN -- PLAIN CONCRETE, NO REINFORCING

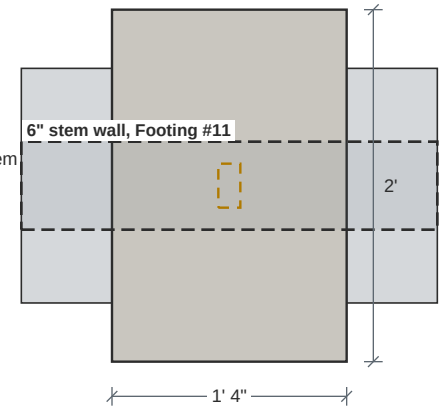

Unreinforced (Plain)

Carrying: Dead 574 lb Roof Live 615 lb

Design Results	Actual	Allowed	Result	Method	Load Combination
Soil Bearing Pressure (psf)	579	1,500	Passed (39% used)	ASD	D+Lr
One-Way Shear X (lbs)	105	6,310	Passed (2% used)	LRFD	1.2D+1.6Lr+L
Two-Way Shear (lbs)	1,124	35,404	Passed (3% used)	LRFD	1.2D+1.6Lr+L
Moment X (ft-lbs)	367	2,958	Passed (12% used)	LRFD	1.2D+1.6Lr+L
Moment Y (ft-lbs)	253	4,437	Passed (6% used)	LRFD	1.2D+1.6Lr+L
Crushing (lbs)	1,672	13,770	Passed (12% used)	LRFD	1.2D+1.6Lr+L
Minimum Thickness (in)	11"	8" min	Meets the minimum	code	ACI 318-14 Ch. 14

Footing Specification

as entered on the footing, and the mat the check selected

Geometry	
Shape	Rectangular
Bears on it	Header #1 on (1) trimmer
Bearing size	1 1/2" x 3"
Footing width	1' 4"
Footing length	2'
Footing depth	11"

Footing Properties	
Concrete strength	3,000 psi
Soil bearing pressure	1,500 psf
Concrete density	145 pcf

Soil Properties	
Soil depth above footing	0

Reinforcement	
Reinforcing	none -- plain concrete
Plain concrete (no reinforcing)	Yes

- Soil bearing is checked at service level (ASD) and includes the footing's own weight; shear, moment and crushing at strength level (LRFD), ACI 318-14, loads combined to ASCE 7-16.
- Which way round the bearing sits on the pad is not known: it is checked both ways and the worse is shown.
- Wood on the concrete: the wood's own bearing -- a sill or plate in Fc-perp, a post's end grain in Fc -- can govern below the concrete value; it is not checked on this sheet.

Applied Loads	Location	Trib. Width	Dead	Roof Live	Comments
1 - Point (lb)	--	N/A	573.5	615	Linked from: Header #1, Support 1

SpotFtg Hdr #1-2

PASSED

Spot Footing 1' 4" x 2' x 11" deep -- Unreinforced (Plain)

Level: Basement | f'c 3,000 psi | soil 1,500 psf | in a foundation wall (6" x 24" stem, Footing #11) | on it: Header #1 on (1) trimmer | ACI 318-14

Controls: Soil Bearing Pressure 39% used
Adequacy 61.4% (capacity to spare)

WHAT LOADS IT

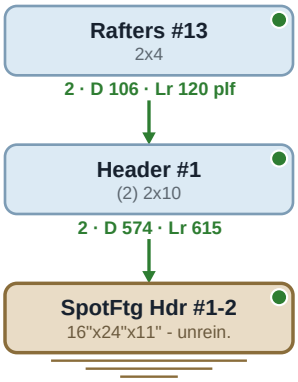

ELEVATION IN THE FOUNDATION WALL

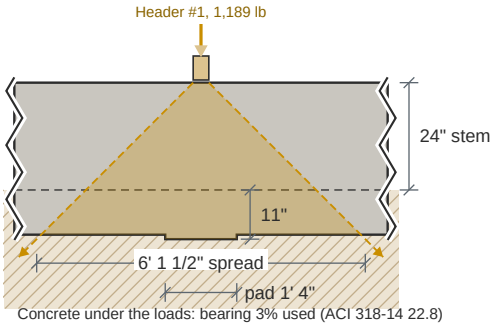

PLAN -- PLAIN CONCRETE, NO REINFORCING

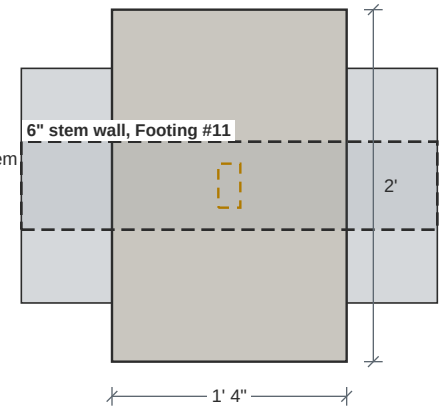

Unreinforced (Plain)

Carrying: Dead 574 lb Roof Live 615 lb

Design Results	Actual	Allowed	Result	Method	Load Combination
Soil Bearing Pressure (psf)	579	1,500	Passed (39% used)	ASD	D+Lr
One-Way Shear X (lbs)	105	6,310	Passed (2% used)	LRFD	1.2D+1.6Lr+L
Two-Way Shear (lbs)	1,124	35,404	Passed (3% used)	LRFD	1.2D+1.6Lr+L
Moment X (ft-lbs)	367	2,958	Passed (12% used)	LRFD	1.2D+1.6Lr+L
Moment Y (ft-lbs)	253	4,437	Passed (6% used)	LRFD	1.2D+1.6Lr+L
Crushing (lbs)	1,672	13,770	Passed (12% used)	LRFD	1.2D+1.6Lr+L
Minimum Thickness (in)	11"	8" min	Meets the minimum	code	ACI 318-14 Ch. 14

Footing Specification

as entered on the footing, and the mat the check selected

Geometry	
Shape	Rectangular
Bears on it	Header #1 on (1) trimmer
Bearing size	1 1/2" x 3"
Footing width	1' 4"
Footing length	2'
Footing depth	11"

Footing Properties	
Concrete strength	3,000 psi
Soil bearing pressure	1,500 psf
Concrete density	145 pcf

Soil Properties	
Soil depth above footing	0

Reinforcement	
Reinforcing	none -- plain concrete
Plain concrete (no reinforcing)	Yes

- Soil bearing is checked at service level (ASD) and includes the footing's own weight; shear, moment and crushing at strength level (LRFD), ACI 318-14, loads combined to ASCE 7-16.
- Which way round the bearing sits on the pad is not known: it is checked both ways and the worse is shown.
- Wood on the concrete: the wood's own bearing -- a sill or plate in Fc-perp, a post's end grain in Fc -- can govern below the concrete value; it is not checked on this sheet.

Applied Loads	Location	Trib. Width	Dead	Roof Live	Comments
1 - Point (lb)	--	N/A	573.5	615	Linked from: Header #1, Support 2

SpotFtg Hdr #3-1

PASSED

Spot Footing 1' 4" x 1' 9" x 11" deep -- Bot. (5) #4 the short way, (2) #4 the long way - 3 of the short-way bars in the center 1' 4"

Controls: Soil Bearing Pressure 48% used
Adequacy 52% (capacity to spare)

Level: Basement | f'c 3,000 psi | rebar Fy 60 ksi | soil 1,500 psf | in a foundation wall (10" x 108" stem, Footing #1) | on it: Header #3 on (1) trimmer | ACI 318-14

WHAT LOADS IT

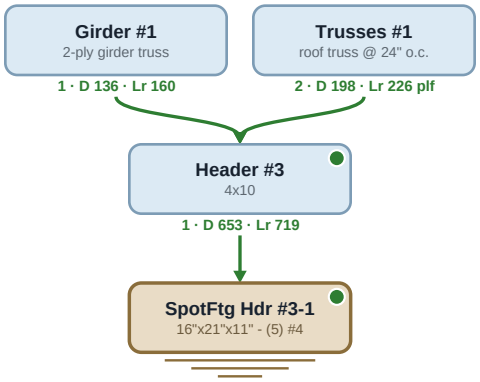

ELEVATION IN THE FOUNDATION WALL

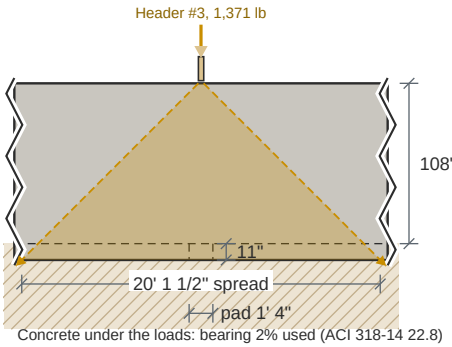

PLAN -- BOTTOM MAT

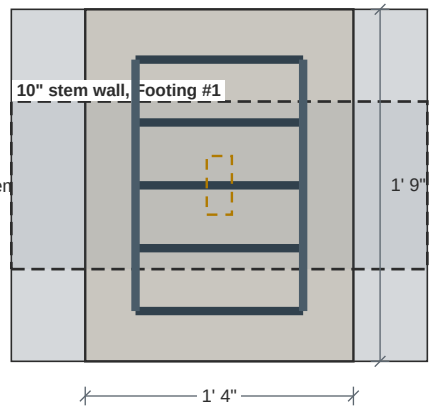

Carrying: Dead 653 lb Roof Live 719 lb

Bot. (5) #4 the short way, (2) #4 the long way - 3 of the short-way bars in the center 1' 4"

Design Results	Actual	Allowed	Result	Method	Load Combination
Soil Bearing Pressure (psf)	721	1,500	Passed (48% used)	ASD	D+Lr
One-Way Shear X (lbs)	138	9,530	Passed (1% used)	LRFD	1.2D+1.6Lr+L
One-Way Shear Y (lbs)	0	12,509	Passed (0% used)	LRFD	1.2D+1.6Lr+L
Two-Way Shear (lbs)	1,364	45,774	Passed (3% used)	LRFD	1.2D+1.6Lr+L
Moment X (ft-lbs)	355	12,521	Passed (3% used)	LRFD	1.2D+1.6Lr+L
Moment Y (ft-lbs)	293	30,104	Passed (1% used)	LRFD	1.2D+1.6Lr+L
Crushing (lbs)	1,933	17,404	Passed (11% used)	LRFD	1.2D+1.6Lr+L
Depth Above Bars (in)	7 3/4"	6" min	Meets the minimum	code	ACI 318-14 13.3.1.2

Footing Specification

as entered on the footing, and the mat the check selected

Geometry	
Shape	Rectangular
Bears on it	Header #3 on (1) trimmer
Bearing size	1 1/2" x 3 1/2"
Footing width	1' 4"
Footing length	1' 9"
Footing depth	11"

Footing Properties	
Steel yield strength	60,000 psi
Concrete strength	3,000 psi
Soil bearing pressure	1,500 psf
Concrete density	145 pcf
Bottom reinf. cover	3"

Soil Properties	
Soil depth above footing	0

Reinforcement	
Bottom mat	Bot. (5) #4 the short way, (2) #4 the long way - 3 of the short-way bars in the center 1' 4"
Bars the short way	(5) #4
Bars the long way	(2) #4
Selected for	moment and minimum steel
Plain concrete (no reinforcing)	No

- Soil bearing is checked at service level (ASD) and includes the footing's own weight; shear, moment and crushing at strength level (LRFD), ACI 318-14, loads combined to ASCE 7-16.
- Reinforcement is selected for the moment and for minimum steel (ACI 318-14: 0.0018 Ag for Grade 60), at no more than 3h or 18 in.
- Which way round the bearing sits on the pad is not known: it is checked both ways and the worse is shown.
- Wood on the concrete: the wood's own bearing -- a sill or plate in Fc-perp, a post's end grain in Fc -- can govern below the concrete value; it is not checked on this sheet.

Applied Loads	Location	Trib. Width	Dead	Roof Live	Comments
1 - Point (lb)	--	N/A	652.9	718.5	Linked from: Header #3, Support 1

SpotFtg Hdr #3-2

PASSED

Spot Footing 1' 4" x 4' 6" x 10" deep -- Bot. (7) #4 the short way, (2) #4 the long way - 3 of the short-way bars in the center 1' 4"

Controls: Soil Bearing Pressure 26% used
Adequacy 74.5% (capacity to spare)

Level: Basement | f'c 3,000 psi | rebar Fy 60 ksi | soil 1,500 psf | on it: Header #3 on (1) trimmer | ACI 318-14

WHAT LOADS IT

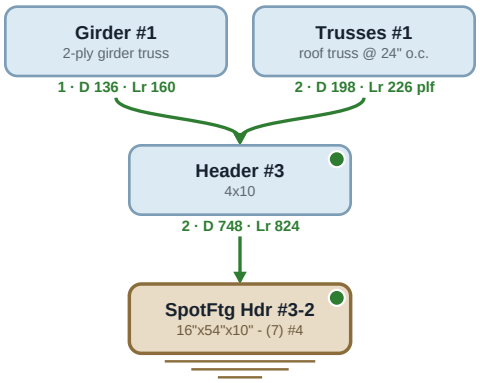

SECTION

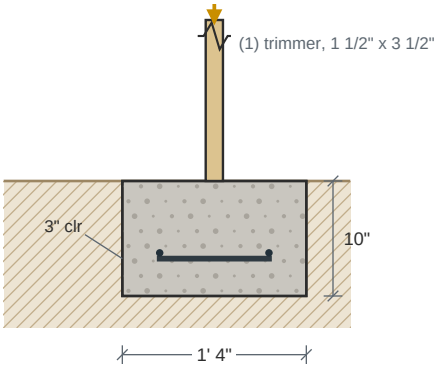

PLAN -- BOTTOM MAT

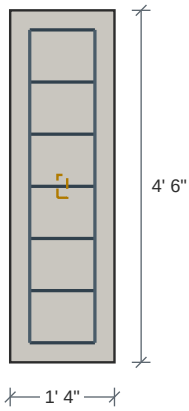

Carrying: Dead 748 lb Roof Live 824 lb

Bot. (7) #4 the short way, (2) #4 the long way - 3 of the short-way bars in the center 1' 4"

Design Results	Actual	Allowed	Result	Method	Load Combination
Soil Bearing Pressure (psf)	383	1,500	Passed (26% used)	ASD	D+Lr
One-Way Shear X (lbs)	779	8,216	Passed (9% used)	LRFD	1.2D+1.6Lr+L
One-Way Shear Y (lbs)	138	27,728	Passed (0% used)	LRFD	1.2D+1.6Lr+L
Two-Way Shear (lbs)	2,010	35,704	Passed (6% used)	LRFD	1.2D+1.6Lr+L
Moment X (ft-lbs)	1,167	10,721	Passed (11% used)	LRFD	1.2D+1.6Lr+L
Moment Y (ft-lbs)	335	37,453	Passed (1% used)	LRFD	1.2D+1.6Lr+L
Crushing (lbs)	2,215	17,404	Passed (13% used)	LRFD	1.2D+1.6Lr+L
Depth Above Bars (in)	6 3/4"	6" min	Meets the minimum	code	ACI 318-14 13.3.1.2

Footing Specification

as entered on the footing, and the mat the check selected

Geometry	
Shape	Rectangular
Bears on it	Header #3 on (1) trimmer
Bearing size	1 1/2" x 3 1/2"
Footing width	1' 4"
Footing length	4' 6"
Footing depth	10"

Footing Properties	
Steel yield strength	60,000 psi
Concrete strength	3,000 psi
Soil bearing pressure	1,500 psf
Concrete density	145 pcf
Bottom reinf. cover	3"

Soil Properties	
Soil depth above footing	0

Reinforcement	
Bottom mat	Bot. (7) #4 the short way, (2) #4 the long way - 3 of the short-way bars in the center 1' 4"
Bars the short way	(7) #4
Bars the long way	(2) #4
Selected for	moment and minimum steel
Plain concrete (no reinforcing)	No

- Soil bearing is checked at service level (ASD) and includes the footing's own weight; shear, moment and crushing at strength level (LRFD), ACI 318-14, loads combined to ASCE 7-16.
- Reinforcement is selected for the moment and for minimum steel (ACI 318-14: 0.0018 Ag for Grade 60), at no more than 3h or 18 in.
- Which way round the bearing sits on the pad is not known: it is checked both ways and the worse is shown.
- Wood on the concrete: the wood's own bearing -- a sill or plate in Fc-perp, a post's end grain in Fc -- can govern below the concrete value; it is not checked on this sheet.

Applied Loads	Location	Trib. Width	Dead	Roof Live	Comments
1 - Point (lb)	--	N/A	747.5	823.8	Linked from: Header #3, Support 2

SpotFtg Hdr #4-1

Spot Footing 1' 4" x 1' 4" x 10" deep -- Unreinforced (Plain)

Level: Basement | f'c 3,000 psi | soil 1,500 psf | on it: wood bearing 5 1/2 x 3, as set on the pad | ACI 318-14

PASSED

Controls: Soil Bearing Pressure 70% used
Adequacy 29.5% (capacity to spare)

WHAT LOADS IT

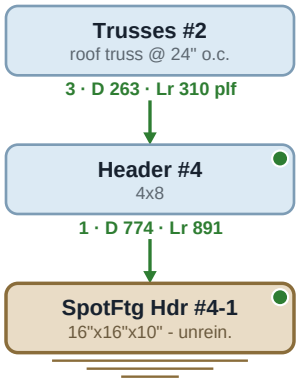

SECTION

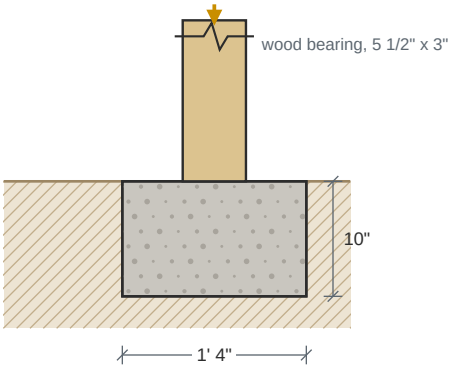

PLAN -- PLAIN CONCRETE, NO REINFORCING

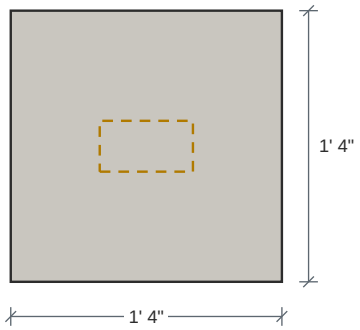

Unreinforced (Plain)

Carrying: Dead 774 lb Roof Live 891 lb

Design Results	Actual	Allowed	Result	Method	Load Combination
Soil Bearing Pressure (psf)	1,057	1,500	Passed (70% used)	ASD	D+Lr
Two-Way Shear (lbs)	989	34,267	Passed (3% used)	LRFD	1.2D+1.6Lr+L
Moment X (ft-lbs)	322	2,337	Passed (14% used)	LRFD	1.2D+1.6Lr+L
Moment Y (ft-lbs)	269	2,337	Passed (12% used)	LRFD	1.2D+1.6Lr+L
Crushing (lbs)	2,354	50,490	Passed (5% used)	LRFD	1.2D+1.6Lr+L
Minimum Thickness (in)	10"	8" min	Meets the minimum	code	ACI 318-14 Ch. 14

Footing Specification

as entered on the footing, and the mat the check selected

Geometry	
Shape	Square
Bears on it	wood bearing 5 1/2 x 3, as set on the pad
Bearing size	5 1/2" x 3"
Footing width	1' 4"
Footing length	1' 4"
Footing depth	10"

Footing Properties	
Concrete strength	3,000 psi
Soil bearing pressure	1,500 psf
Concrete density	145 pcf

Soil Properties	
Soil depth above footing	0

Reinforcement	
Reinforcing	none -- plain concrete
Plain concrete (no reinforcing)	Yes

- Soil bearing is checked at service level (ASD) and includes the footing's own weight; shear, moment and crushing at strength level (LRFD), ACI 318-14, loads combined to ASCE 7-16.
- Wood on the concrete: the wood's own bearing -- a sill or plate in Fc-perp, a post's end grain in Fc -- can govern below the concrete value; it is not checked on this sheet.

Applied Loads	Location	Trib. Width	Dead	Roof Live	Comments
1 - Point (lb)	--	N/A	773.9	890.9	Linked from: Header #4, Support 1

SpotFtg Hdr #4-2

Spot Footing 1' 4" x 1' 4" x 10" deep -- Unreinforced (Plain)

Level: Basement | f'c 3,000 psi | soil 1,500 psf | on it: wood bearing 5 1/2 x 1 1/2, as set on the pad | ACI 318-14

PASSED

Controls: Soil Bearing Pressure 70% used
Adequacy 29.5% (capacity to spare)

WHAT LOADS IT

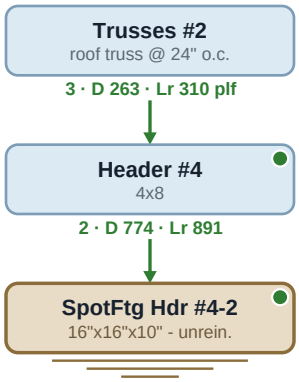

SECTION

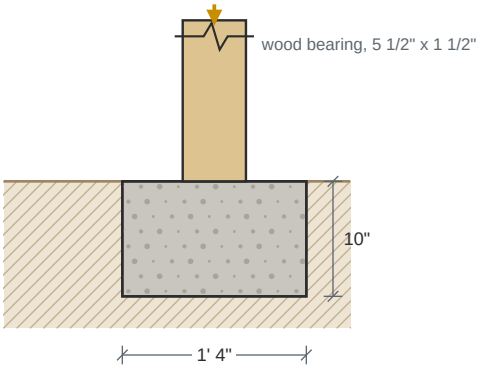

PLAN -- PLAIN CONCRETE, NO REINFORCING

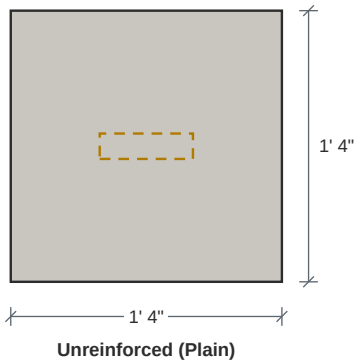

Unreinforced (Plain)

Carrying: Dead 774 lb Roof Live 891 lb

Design Results	Actual	Allowed	Result	Method	Load Combination
Soil Bearing Pressure (psf)	1,057	1,500	Passed (70% used)	ASD	D+Lr
Two-Way Shear (lbs)	1,175	24,920	Passed (5% used)	LRFD	1.2D+1.6Lr+L
Moment X (ft-lbs)	356	2,337	Passed (15% used)	LRFD	1.2D+1.6Lr+L
Moment Y (ft-lbs)	269	2,337	Passed (12% used)	LRFD	1.2D+1.6Lr+L
Crushing (lbs)	2,354	25,245	Passed (9% used)	LRFD	1.2D+1.6Lr+L
Minimum Thickness (in)	10"	8" min	Meets the minimum	code	ACI 318-14 Ch. 14

Footing Specification

as entered on the footing, and the mat the check selected

Geometry	
Shape	Square
Bears on it	wood bearing 5 1/2 x 1 1/2, as set on the pad
Bearing size	5 1/2" x 1 1/2"
Footing width	1' 4"
Footing length	1' 4"
Footing depth	10"

Footing Properties	
Concrete strength	3,000 psi
Soil bearing pressure	1,500 psf
Concrete density	145 pcf

Soil Properties	
Soil depth above footing	0

Reinforcement	
Reinforcing	none -- plain concrete
Plain concrete (no reinforcing)	Yes

- Soil bearing is checked at service level (ASD) and includes the footing's own weight; shear, moment and crushing at strength level (LRFD), ACI 318-14, loads combined to ASCE 7-16.
- Wood on the concrete: the wood's own bearing -- a sill or plate in Fc-perp, a post's end grain in Fc -- can govern below the concrete value; it is not checked on this sheet.

Applied Loads	Location	Trib. Width	Dead	Roof Live	Comments
1 - Point (lb)	--	N/A	773.9	890.9	Linked from: Header #4, Support 2

SpotFtg Hdr #5-1

PASSED

Spot Footing 1' 4" x 2' x 10" deep -- Unreinforced (Plain)

Level: Basement | f'c 3,000 psi | soil 1,500 psf | in a foundation wall (8" x 56" stem, Footing #6) | on it: Header #5 on (1) trimmer | ACI 318-14

Controls: Soil Bearing Pressure 22% used
Adequacy 77.6% (capacity to spare)

WHAT LOADS IT

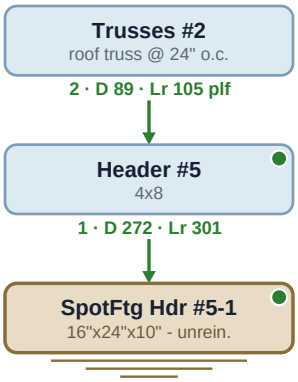

ELEVATION IN THE FOUNDATION WALL

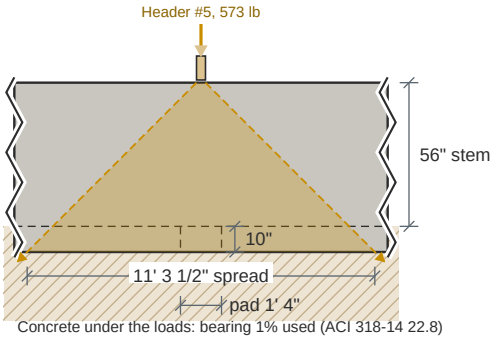

PLAN -- PLAIN CONCRETE, NO REINFORCING

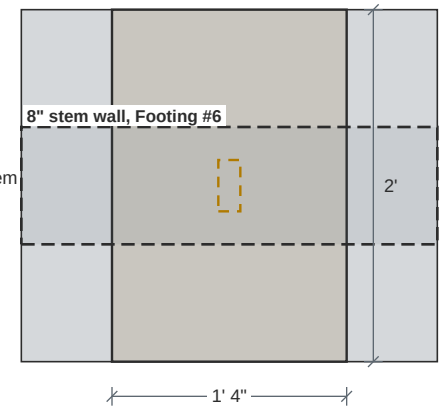

Unreinforced (Plain)

Carrying: Dead 272 lb Roof Live 301 lb

Design Results	Actual	Allowed	Result	Method	Load Combination
Soil Bearing Pressure (psf)	336	1,500	Passed (22% used)	ASD	D+Lr
One-Way Shear X (lbs)	76	5,609	Passed (1% used)	LRFD	1.2D+1.6Lr+L
Two-Way Shear (lbs)	578	27,342	Passed (2% used)	LRFD	1.2D+1.6Lr+L
Moment X (ft-lbs)	174	2,337	Passed (7% used)	LRFD	1.2D+1.6Lr+L
Moment Y (ft-lbs)	122	3,505	Passed (3% used)	LRFD	1.2D+1.6Lr+L
Crushing (lbs)	808	16,065	Passed (5% used)	LRFD	1.2D+1.6Lr+L
Minimum Thickness (in)	10"	8" min	Meets the minimum	code	ACI 318-14 Ch. 14

Footing Specification

as entered on the footing, and the mat the check selected

Geometry	
Shape	Rectangular
Bears on it	Header #5 on (1) trimmer
Bearing size	1 1/2" x 3 1/2"
Footing width	1' 4"
Footing length	2'
Footing depth	10"

Footing Properties	
Concrete strength	3,000 psi
Soil bearing pressure	1,500 psf
Concrete density	145 pcf

Soil Properties	
Soil depth above footing	0

Reinforcement	
Reinforcing	none -- plain concrete
Plain concrete (no reinforcing)	Yes

- Soil bearing is checked at service level (ASD) and includes the footing's own weight; shear, moment and crushing at strength level (LRFD), ACI 318-14, loads combined to ASCE 7-16.
- Which way round the bearing sits on the pad is not known: it is checked both ways and the worse is shown.
- Wood on the concrete: the wood's own bearing -- a sill or plate in Fc-perp, a post's end grain in Fc -- can govern below the concrete value; it is not checked on this sheet.

Applied Loads	Location	Trib. Width	Dead	Roof Live	Comments
1 - Point (lb)	--	N/A	272.4	300.9	Linked from: Header #5, Support 1

SpotFtg Hdr #5-2

PASSED

Spot Footing 1' 4" x 2' x 11" deep -- Unreinforced (Plain)

Controls: Soil Bearing Pressure 23% used

Adequacy 76.8% (capacity to spare)

Level: Basement | f'c 3,000 psi | soil 1,500 psf | in a foundation wall (6" x 24" stem, Footing #11) | on it: Header #5 on (1) trimmer | ACI 318-14

WHAT LOADS IT

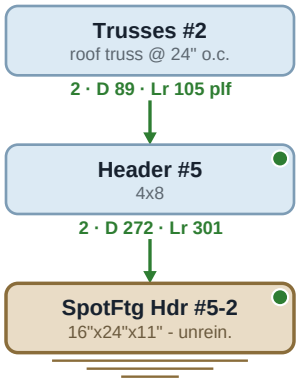

ELEVATION IN THE FOUNDATION WALL

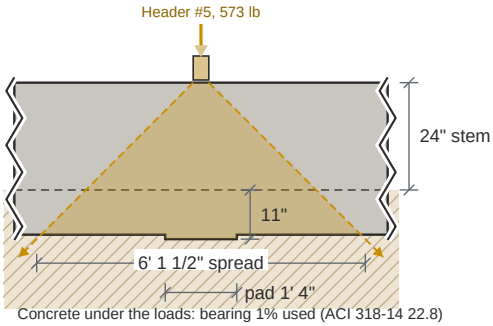

PLAN -- PLAIN CONCRETE, NO REINFORCING

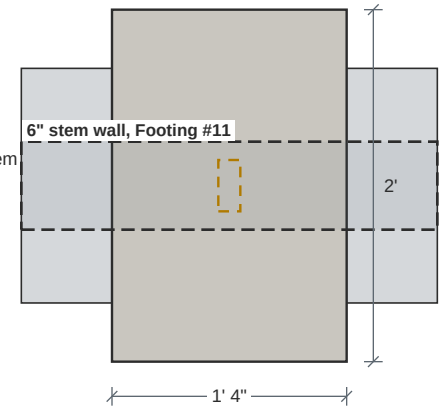

Unreinforced (Plain)

Carrying: Dead 272 lb Roof Live 301 lb

Design Results	Actual	Allowed	Result	Method	Load Combination
Soil Bearing Pressure (psf)	348	1,500	Passed (23% used)	ASD	D+Lr
One-Way Shear X (lbs)	42	6,310	Passed (1% used)	LRFD	1.2D+1.6Lr+L
Two-Way Shear (lbs)	532	33,690	Passed (2% used)	LRFD	1.2D+1.6Lr+L
Moment X (ft-lbs)	174	2,958	Passed (6% used)	LRFD	1.2D+1.6Lr+L
Moment Y (ft-lbs)	122	4,437	Passed (3% used)	LRFD	1.2D+1.6Lr+L
Crushing (lbs)	808	16,065	Passed (5% used)	LRFD	1.2D+1.6Lr+L
Minimum Thickness (in)	11"	8" min	Meets the minimum	code	ACI 318-14 Ch. 14

Footing Specification

as entered on the footing, and the mat the check selected

Geometry	
Shape	Rectangular
Bears on it	Header #5 on (1) trimmer
Bearing size	1 1/2" x 3 1/2"
Footing width	1' 4"
Footing length	2'
Footing depth	11"

Footing Properties	
Concrete strength	3,000 psi
Soil bearing pressure	1,500 psf
Concrete density	145 pcf

Soil Properties	
Soil depth above footing	0

Reinforcement	
Reinforcing	none -- plain concrete
Plain concrete (no reinforcing)	Yes

- Soil bearing is checked at service level (ASD) and includes the footing's own weight; shear, moment and crushing at strength level (LRFD), ACI 318-14, loads combined to ASCE 7-16.
- Which way round the bearing sits on the pad is not known: it is checked both ways and the worse is shown.
- Wood on the concrete: the wood's own bearing -- a sill or plate in Fc-perp, a post's end grain in Fc -- can govern below the concrete value; it is not checked on this sheet.

Applied Loads	Location	Trib. Width	Dead	Roof Live	Comments
1 - Point (lb)	--	N/A	272.4	300.9	Linked from: Header #5, Support 2

SpotFtg Hdr #6-1

Spot Footing 1' 4" x 1' 4" x 10" deep -- Unreinforced (Plain)

Level: Basement | f'c 3,000 psi | soil 1,500 psf | on it: Header #6 on (1) trimmer | ACI 318-14

PASSED

Controls: Soil Bearing Pressure 48% used
Adequacy 52.4% (capacity to spare)

WHAT LOADS IT

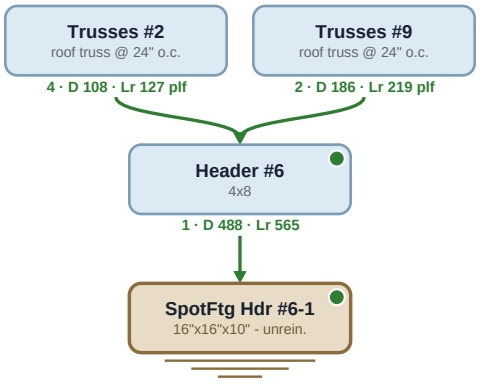

SECTION

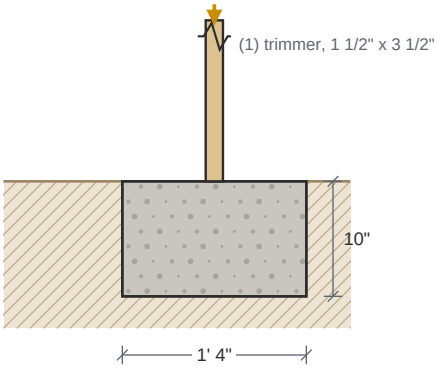

PLAN -- PLAIN CONCRETE, NO REINFORCING

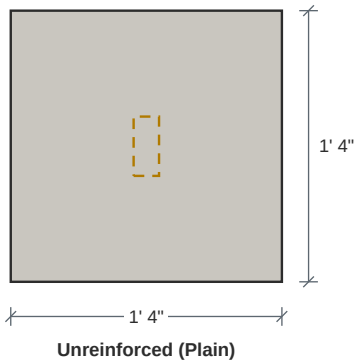

Unreinforced (Plain)

Carrying: Dead 488 lb Roof Live 565 lb

Design Results	Actual	Allowed	Result	Method	Load Combination
Soil Bearing Pressure (psf)	713	1,500	Passed (48% used)	ASD	D+Lr
Two-Way Shear (lbs)	854	27,342	Passed (3% used)	LRFD	1.2D+1.6Lr+L
Moment X (ft-lbs)	197	2,337	Passed (8% used)	LRFD	1.2D+1.6Lr+L
Moment Y (ft-lbs)	226	2,337	Passed (10% used)	LRFD	1.2D+1.6Lr+L
Crushing (lbs)	1,490	16,065	Passed (9% used)	LRFD	1.2D+1.6Lr+L
Minimum Thickness (in)	10"	8" min	Meets the minimum	code	ACI 318-14 Ch. 14

Footing Specification

as entered on the footing, and the mat the check selected

Geometry	
Shape	Square
Bears on it	Header #6 on (1) trimmer
Bearing size	1 1/2" x 3 1/2"
Footing width	1' 4"
Footing length	1' 4"
Footing depth	10"

Footing Properties	
Concrete strength	3,000 psi
Soil bearing pressure	1,500 psf
Concrete density	145 pcf

Soil Properties	
Soil depth above footing	0

Reinforcement	
Reinforcing	none -- plain concrete
Plain concrete (no reinforcing)	Yes

- Soil bearing is checked at service level (ASD) and includes the footing's own weight; shear, moment and crushing at strength level (LRFD), ACI 318-14, loads combined to ASCE 7-16.
- Wood on the concrete: the wood's own bearing -- a sill or plate in Fc-perp, a post's end grain in Fc -- can govern below the concrete value; it is not checked on this sheet.

Applied Loads	Location	Trib. Width	Dead	Roof Live	Comments
1 - Point (lb)	--	N/A	488.3	565	Linked from: Header #6, Support 1

SpotFtg Hdr #6-2

Spot Footing 1' 4" x 1' 4" x 10" deep -- Unreinforced (Plain)

Level: Basement | f'c 3,000 psi | soil 1,500 psf | on it: Header #6 on (1) trimmer | ACI 318-14

PASSED

Controls: Soil Bearing Pressure 47% used
Adequacy 52.5% (capacity to spare)

WHAT LOADS IT

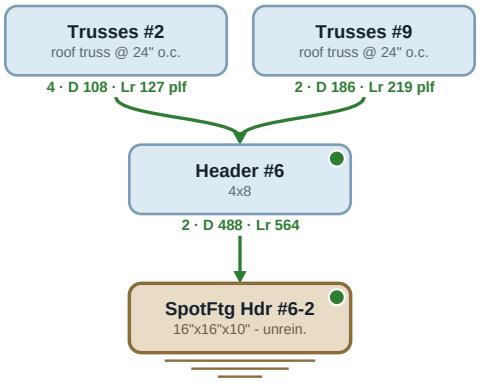

SECTION

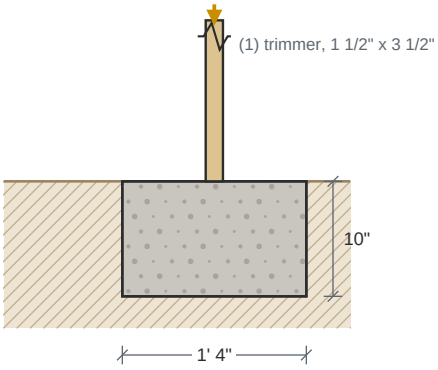

PLAN -- PLAIN CONCRETE, NO REINFORCING

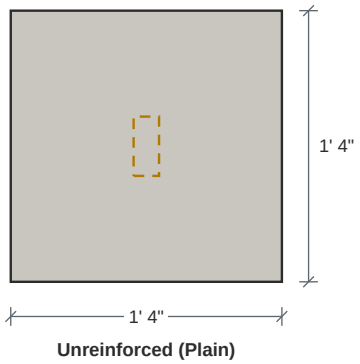

Unreinforced (Plain)

Carrying: Dead 488 lb Roof Live 564 lb

Design Results	Actual	Allowed	Result	Method	Load Combination
Soil Bearing Pressure (psf)	712	1,500	Passed (47% used)	ASD	D+Lr
Two-Way Shear (lbs)	853	27,342	Passed (3% used)	LRFD	1.2D+1.6Lr+L
Moment X (ft-lbs)	197	2,337	Passed (8% used)	LRFD	1.2D+1.6Lr+L
Moment Y (ft-lbs)	225	2,337	Passed (10% used)	LRFD	1.2D+1.6Lr+L
Crushing (lbs)	1,488	16,065	Passed (9% used)	LRFD	1.2D+1.6Lr+L
Minimum Thickness (in)	10"	8" min	Meets the minimum	code	ACI 318-14 Ch. 14

Footing Specification

as entered on the footing, and the mat the check selected

Geometry	
Shape	Square
Bears on it	Header #6 on (1) trimmer
Bearing size	1 1/2" x 3 1/2"
Footing width	1' 4"
Footing length	1' 4"
Footing depth	10"

Footing Properties	
Concrete strength	3,000 psi
Soil bearing pressure	1,500 psf
Concrete density	145 pcf

Soil Properties	
Soil depth above footing	0

Reinforcement	
Reinforcing	none -- plain concrete
Plain concrete (no reinforcing)	Yes

- Soil bearing is checked at service level (ASD) and includes the footing's own weight; shear, moment and crushing at strength level (LRFD), ACI 318-14, loads combined to ASCE 7-16.
- Wood on the concrete: the wood's own bearing -- a sill or plate in Fc-perp, a post's end grain in Fc -- can govern below the concrete value; it is not checked on this sheet.

Applied Loads	Location	Trib. Width	Dead	Roof Live	Comments
1 - Point (lb)	--	N/A	487.5	564.1	Linked from: Header #6, Support 2

SpotFtg Hdr #7-1

PASSED

Spot Footing 1' 4" x 2' x 10" deep -- Unreinforced (Plain)

Level: Basement | f'c 3,000 psi | soil 1,500 psf | in a foundation wall (8" x 56" stem, Footing #6) | on it: Header #7 on (1) trimmer | ACI 318-14

Controls: Soil Bearing Pressure 46% used
Adequacy 53.9% (capacity to spare)

WHAT LOADS IT

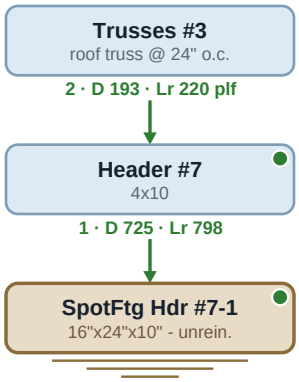

ELEVATION IN THE FOUNDATION WALL

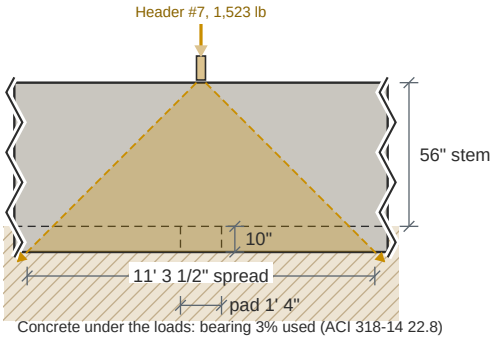

PLAN -- PLAIN CONCRETE, NO REINFORCING

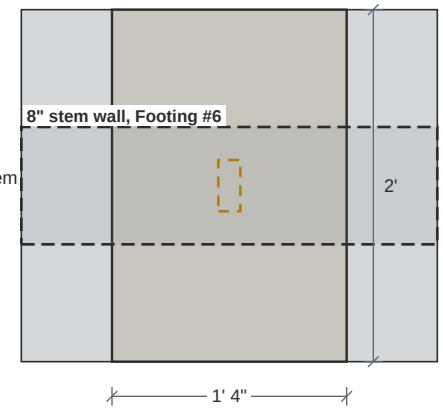

Unreinforced (Plain)

Carrying: Dead 725 lb Roof Live 798 lb

Design Results	Actual	Allowed	Result	Method	Load Combination
Soil Bearing Pressure (psf)	692	1,500	Passed (46% used)	ASD	D+Lr
One-Way Shear X (lbs)	201	5,609	Passed (4% used)	LRFD	1.2D+1.6Lr+L
Two-Way Shear (lbs)	1,536	27,342	Passed (6% used)	LRFD	1.2D+1.6Lr+L
Moment X (ft-lbs)	461	2,337	Passed (20% used)	LRFD	1.2D+1.6Lr+L
Moment Y (ft-lbs)	325	3,505	Passed (9% used)	LRFD	1.2D+1.6Lr+L
Crushing (lbs)	2,147	16,065	Passed (13% used)	LRFD	1.2D+1.6Lr+L
Minimum Thickness (in)	10"	8" min	Meets the minimum	code	ACI 318-14 Ch. 14

Footing Specification

as entered on the footing, and the mat the check selected

Geometry	
Shape	Rectangular
Bears on it	Header #7 on (1) trimmer
Bearing size	1 1/2" x 3 1/2"
Footing width	1' 4"
Footing length	2'
Footing depth	10"

Footing Properties	
Concrete strength	3,000 psi
Soil bearing pressure	1,500 psf
Concrete density	145 pcf

Soil Properties	
Soil depth above footing	0

Reinforcement	
Reinforcing	none -- plain concrete
Plain concrete (no reinforcing)	Yes

- Soil bearing is checked at service level (ASD) and includes the footing's own weight; shear, moment and crushing at strength level (LRFD), ACI 318-14, loads combined to ASCE 7-16.
- Which way round the bearing sits on the pad is not known: it is checked both ways and the worse is shown.
- Wood on the concrete: the wood's own bearing -- a sill or plate in Fc-perp, a post's end grain in Fc -- can govern below the concrete value; it is not checked on this sheet.

Applied Loads	Location	Trib. Width	Dead	Roof Live	Comments
1 - Point (lb)	--	N/A	725.5	797.5	Linked from: Header #7, Support 1

SpotFtg Hdr #7-3

PASSED

Spot Footing 1' 4" x 4' 6" x 10" deep -- Bot. (7) #4 the short way, (2) #4 the long way - 3 of the short-way bars in the center 1' 4"

Controls: Soil Bearing Pressure 8% used
Adequacy 91.9% (capacity to spare)

Level: Basement | f'c 3,000 psi | rebar Fy 60 ksi | soil 1,500 psf | bearing 8" x 8" assumed (nothing linked to say what stands on it) | ACI 318-14

SECTION

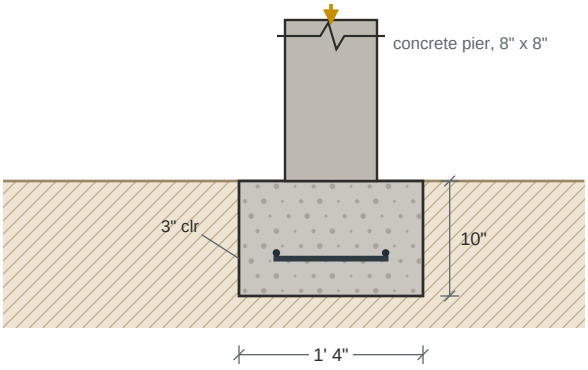

PLAN -- BOTTOM MAT

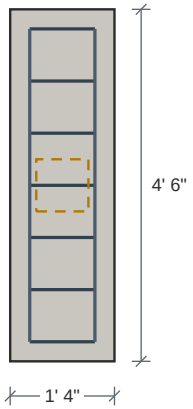

Bot. (7) #4 the short way, (2) #4 the long way - 3 of the short-way bars in the center 1' 4"

Design Results	Actual	Allowed	Result	Method	Load Combination
Soil Bearing Pressure (psf)	121	1,500	Passed (8% used)	ASD	D
One-Way Shear X (lbs)	0	8,216	Passed (0% used)	LRFD	1.4D
One-Way Shear Y (lbs)	0	27,728	Passed (0% used)	LRFD	1.4D
Two-Way Shear (lbs)	0	61,947	Passed (0% used)	LRFD	1.4D
Moment X (ft-lbs)	0	10,721	Passed (0% used)	LRFD	1.4D
Moment Y (ft-lbs)	0	37,453	Passed (0% used)	LRFD	1.4D
Crushing (lbs)	0	212,160	Passed (0% used)	LRFD	1.4D
Depth Above Bars (in)	6 3/4"	6" min	Meets the minimum	code	ACI 318-14 13.3.1.2

Footing Specification

as entered on the footing, and the mat the check selected

Geometry	
Shape	Rectangular
Bears on it	concrete 8" x 8"
Bearing size	8" x 8"
Footing width	1' 4"
Footing length	4' 6"
Footing depth	10"

Footing Properties	
Steel yield strength	60,000 psi
Concrete strength	3,000 psi
Soil bearing pressure	1,500 psf
Concrete density	145 pcf
Bottom reinf. cover	3"

Soil Properties	
Soil depth above footing	0

Reinforcement	
Bottom mat	Bot. (7) #4 the short way, (2) #4 the long way - 3 of the short-way bars in the center 1' 4"
Bars the short way	(7) #4
Bars the long way	(2) #4
Selected for	moment and minimum steel
Plain concrete (no reinforcing)	No

- Soil bearing is checked at service level (ASD) and includes the footing's own weight; shear, moment and crushing at strength level (LRFD), ACI 318-14, loads combined to ASCE 7-16.
- Reinforcement is selected for the moment and for minimum steel (ACI 318-14: 0.0018 Ag for Grade 60), at no more than 3h or 18 in.

SpotFtg Hdr #9-2

Spot Footing 3' x 1' 4" x 10" deep -- Unreinforced (Plain)

Level: Basement | f'c 3,000 psi | soil 1,500 psf | in a foundation wall (6" x 24" stem, typed) | on it: Header #9 on (1) trimmer; Header #10 on (1) trimmer; Header #22 on (1) trimmer -- side by side, 4 1/2 x 4 1/2 together | ACI 318-14

PASSED

Controls: Moment Y 94% used
Adequacy 5.5% (capacity to spare)

What Loads It

click a box to go to that member

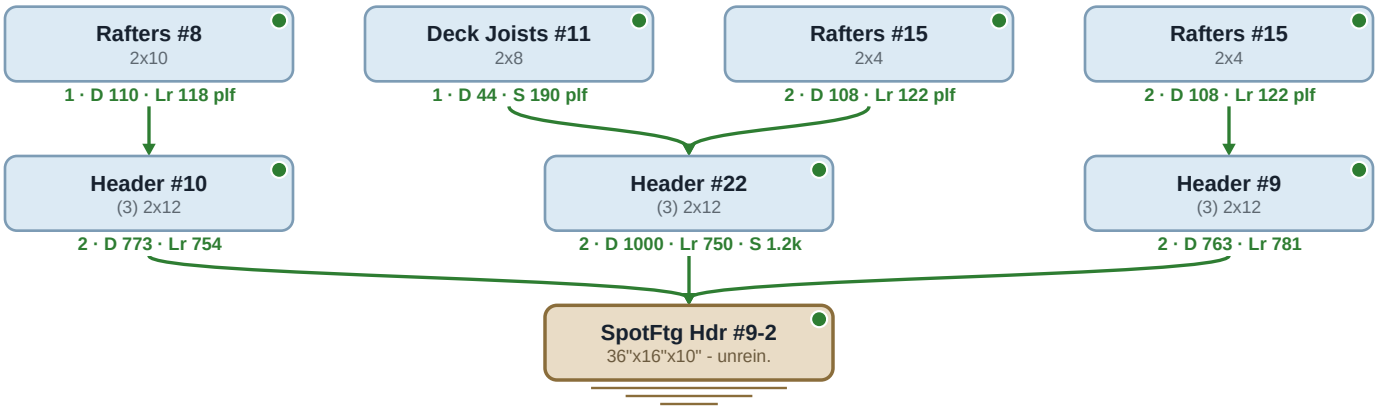

ELEVATION IN THE FOUNDATION WALL

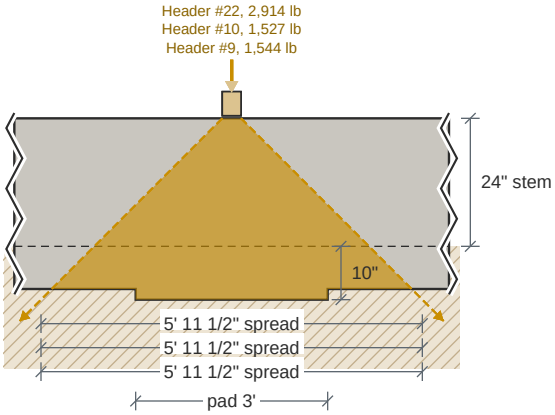

Concrete under the loads: bearing 5% used; where they overlap 15% (ACI 318-14 22.8)

PLAN -- PLAIN CONCRETE, NO REINFORCING

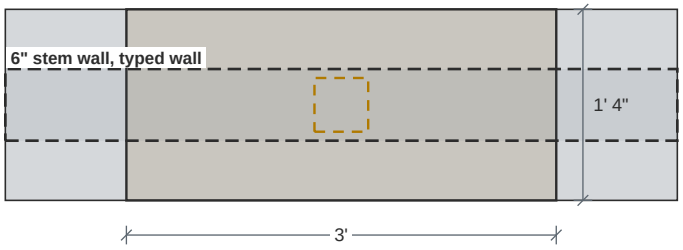

Unreinforced (Plain)

Carrying: Dead 2,536 lb Roof Live 2,285 lb Snow 1,164 lb

Design Results	Actual	Allowed	Result	Method	Load Combination
Soil Bearing Pressure (psf)	1,326	1,500	Passed (88% used)	ASD	D+Lr
One-Way Shear Y (lbs)	1,442	5,609	Passed (26% used)	LRFD	1.2D+1.6Lr+L
Two-Way Shear (lbs)	4,882	34,967	Passed (14% used)	LRFD	1.2D+1.6Lr+L
Moment X (ft-lbs)	825	5,258	Passed (16% used)	LRFD	1.2D+1.6Lr+L
Moment Y (ft-lbs)	2,208	2,337	Passed (94% used)	LRFD	1.2D+1.6Lr+L
Crushing (lbs)	6,699	61,965	Passed (11% used)	LRFD	1.2D+1.6Lr+L
Minimum Thickness (in)	10"	8" min	Meets the minimum	code	ACI 318-14 Ch. 14

Footing Specification

as entered on the footing, and the mat the check selected

Geometry	
Shape	Rectangular
Bears on it	Header #9 on (1) trimmer; Header #10 on (1) trimmer; Header #22 on (1) trimmer -- side by side, 4 1/2 x 4 1/2 together
Bearing size	4 1/2" x 4 1/2"
Footing width	3'
Footing length	1' 4"
Footing depth	10"

Footing Properties	
Concrete strength	3,000 psi
Soil bearing pressure	1,500 psf
Concrete density	145 pcf

SpotFtg Hdr #9-2 (continued)

Spot Footing | 3' x 1' 4" x 10" deep -- Unreinforced (Plain)

Soil Properties	
Soil depth above footing	0

Reinforcement	
Reinforcing	none -- plain concrete
Plain concrete (no reinforcing)	Yes

- Soil bearing is checked at service level (ASD) and includes the footing's own weight; shear, moment and crushing at strength level (LRFD), ACI 318-14, loads combined to ASCE 7-16.
- The members on this pad are not placed on it (Load locations): their bearings are taken side by side at the pad's column, one footprint. Place them to check each where it lands.
- Wood on the concrete: the wood's own bearing -- a sill or plate in Fc-perp, a post's end grain in Fc -- can govern below the concrete value; it is not checked on this sheet.

Applied Loads	Location	Trib. Width	Dead	Roof Live	Snow	Comments
1 - Point (lb)	--	N/A	762.9	780.9	--	Linked from: Header #9, Support 2
2 - Point (lb)	--	N/A	773.4	753.6	--	Linked from: Header #10, Support 2
3 - Point (lb)	--	N/A	999.6	750.3	1,164	Linked from: Header #22, Support 2

SpotFtg Hdr #11-1

PASSED

Spot Footing 1' 4" x 2' x 10" deep -- Unreinforced (Plain)

Level: Basement | f'c 3,000 psi | soil 1,500 psf | in a foundation wall (10" x 24" stem, typed) | on it: Header #11 on (1) trimmer | ACI 318-14

Controls: Soil Bearing Pressure 40% used
Adequacy 60.1% (capacity to spare)

WHAT LOADS IT

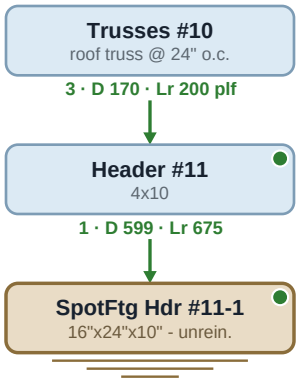

ELEVATION IN THE FOUNDATION WALL

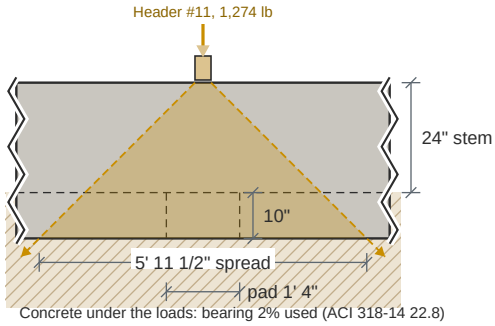

PLAN -- PLAIN CONCRETE, NO REINFORCING

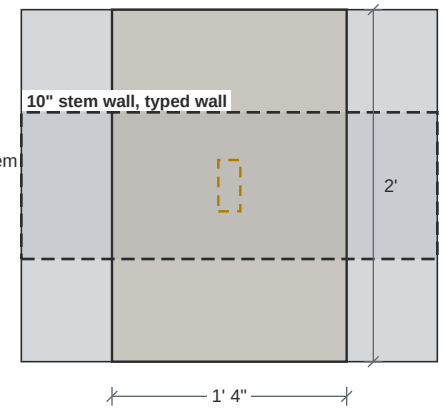

Unreinforced (Plain)

Carrying: Dead 599 lb Roof Live 675 lb

Design Results	Actual	Allowed	Result	Method	Load Combination
Soil Bearing Pressure (psf)	598	1,500	Passed (40% used)	ASD	D+Lr
One-Way Shear X (lbs)	169	5,609	Passed (3% used)	LRFD	1.2D+1.6Lr+L
Two-Way Shear (lbs)	1,287	27,342	Passed (5% used)	LRFD	1.2D+1.6Lr+L
Moment X (ft-lbs)	386	2,337	Passed (17% used)	LRFD	1.2D+1.6Lr+L
Moment Y (ft-lbs)	272	3,505	Passed (8% used)	LRFD	1.2D+1.6Lr+L
Crushing (lbs)	1,798	16,065	Passed (11% used)	LRFD	1.2D+1.6Lr+L
Minimum Thickness (in)	10"	8" min	Meets the minimum	code	ACI 318-14 Ch. 14

Footing Specification

as entered on the footing, and the mat the check selected

Geometry	
Shape	Rectangular
Bears on it	Header #11 on (1) trimmer
Bearing size	1 1/2" x 3 1/2"
Footing width	1' 4"
Footing length	2'
Footing depth	10"

Footing Properties	
Concrete strength	3,000 psi
Soil bearing pressure	1,500 psf
Concrete density	145 pcf

Soil Properties	
Soil depth above footing	0

Reinforcement	
Reinforcing	none -- plain concrete
Plain concrete (no reinforcing)	Yes

- Soil bearing is checked at service level (ASD) and includes the footing's own weight; shear, moment and crushing at strength level (LRFD), ACI 318-14, loads combined to ASCE 7-16.
- Which way round the bearing sits on the pad is not known: it is checked both ways and the worse is shown.
- Wood on the concrete: the wood's own bearing -- a sill or plate in Fc-perp, a post's end grain in Fc -- can govern below the concrete value; it is not checked on this sheet.

Applied Loads	Location	Trib. Width	Dead	Roof Live	Comments
1 - Point (lb)	--	N/A	598.6	675	Linked from: Header #11, Support 1

SpotFtg Hdr #11-2

PASSED

Spot Footing 1' 4" x 2' x 10" deep -- Unreinforced (Plain)

Level: Basement | f'c 3,000 psi | soil 1,500 psf | in a foundation wall (10" x 24" stem, typed) | on it: Header #11 on (1) trimmer | ACI 318-14

Controls: Soil Bearing Pressure 40% used
Adequacy 60.1% (capacity to spare)

WHAT LOADS IT

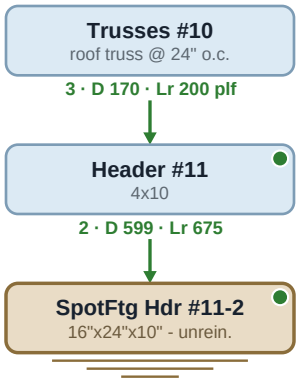

ELEVATION IN THE FOUNDATION WALL

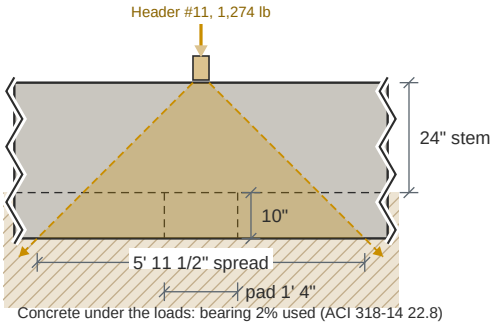

PLAN -- PLAIN CONCRETE, NO REINFORCING

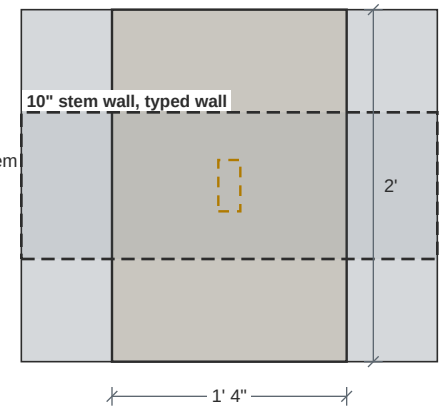

Unreinforced (Plain)

Carrying: Dead 599 lb Roof Live 675 lb

Design Results	Actual	Allowed	Result	Method	Load Combination
Soil Bearing Pressure (psf)	598	1,500	Passed (40% used)	ASD	D+Lr
One-Way Shear X (lbs)	169	5,609	Passed (3% used)	LRFD	1.2D+1.6Lr+L
Two-Way Shear (lbs)	1,287	27,342	Passed (5% used)	LRFD	1.2D+1.6Lr+L
Moment X (ft-lbs)	386	2,337	Passed (17% used)	LRFD	1.2D+1.6Lr+L
Moment Y (ft-lbs)	272	3,505	Passed (8% used)	LRFD	1.2D+1.6Lr+L
Crushing (lbs)	1,798	16,065	Passed (11% used)	LRFD	1.2D+1.6Lr+L
Minimum Thickness (in)	10"	8" min	Meets the minimum	code	ACI 318-14 Ch. 14

Footing Specification

as entered on the footing, and the mat the check selected

Geometry	
Shape	Rectangular
Bears on it	Header #11 on (1) trimmer
Bearing size	1 1/2" x 3 1/2"
Footing width	1' 4"
Footing length	2'
Footing depth	10"

Footing Properties	
Concrete strength	3,000 psi
Soil bearing pressure	1,500 psf
Concrete density	145 pcf

Soil Properties	
Soil depth above footing	0

Reinforcement	
Reinforcing	none -- plain concrete
Plain concrete (no reinforcing)	Yes

- Soil bearing is checked at service level (ASD) and includes the footing's own weight; shear, moment and crushing at strength level (LRFD), ACI 318-14, loads combined to ASCE 7-16.
- Which way round the bearing sits on the pad is not known: it is checked both ways and the worse is shown.
- Wood on the concrete: the wood's own bearing -- a sill or plate in Fc-perp, a post's end grain in Fc -- can govern below the concrete value; it is not checked on this sheet.

Applied Loads	Location	Trib. Width	Dead	Roof Live	Comments
1 - Point (lb)	--	N/A	598.6	675	Linked from: Header #11, Support 2

SpotFtg Hdr #12-2

PASSED

Spot Footing 1' 4" x 2' x 10" deep -- Unreinforced (Plain)

Level: Basement | f'c 3,000 psi | soil 1,500 psf | in a foundation wall (10" x 24" stem, typed) | on it: Header #12 on (1) trimmer | ACI 318-14

Controls: Soil Bearing Pressure 24% used
Adequacy 76.1% (capacity to spare)

WHAT LOADS IT

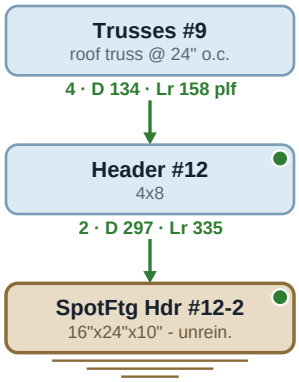

ELEVATION IN THE FOUNDATION WALL

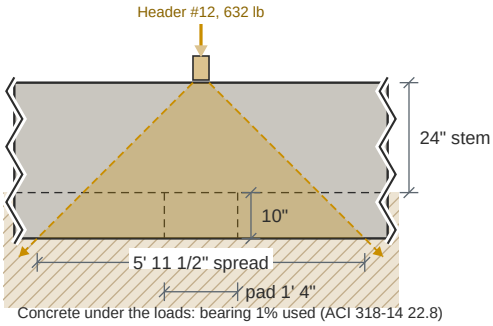

PLAN -- PLAIN CONCRETE, NO REINFORCING

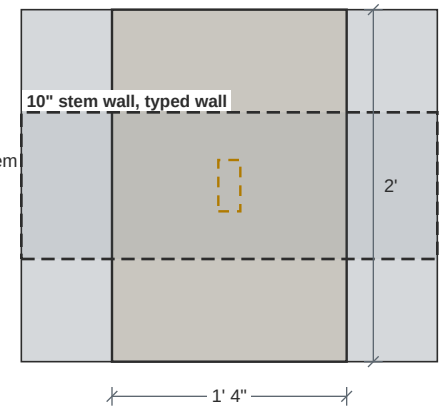

Unreinforced (Plain)

Carrying: Dead 297 lb Roof Live 335 lb

Design Results	Actual	Allowed	Result	Method	Load Combination
Soil Bearing Pressure (psf)	358	1,500	Passed (24% used)	ASD	D+Lr
One-Way Shear X (lbs)	84	5,609	Passed (1% used)	LRFD	1.2D+1.6Lr+L
Two-Way Shear (lbs)	639	27,342	Passed (2% used)	LRFD	1.2D+1.6Lr+L
Moment X (ft-lbs)	192	2,337	Passed (8% used)	LRFD	1.2D+1.6Lr+L
Moment Y (ft-lbs)	135	3,505	Passed (4% used)	LRFD	1.2D+1.6Lr+L
Crushing (lbs)	892	16,065	Passed (6% used)	LRFD	1.2D+1.6Lr+L
Minimum Thickness (in)	10"	8" min	Meets the minimum	code	ACI 318-14 Ch. 14

Footing Specification

as entered on the footing, and the mat the check selected

Geometry	
Shape	Rectangular
Bears on it	Header #12 on (1) trimmer
Bearing size	1 1/2" x 3 1/2"
Footing width	1' 4"
Footing length	2'
Footing depth	10"

Footing Properties	
Concrete strength	3,000 psi
Soil bearing pressure	1,500 psf
Concrete density	145 pcf

Soil Properties	
Soil depth above footing	0

Reinforcement	
Reinforcing	none -- plain concrete
Plain concrete (no reinforcing)	Yes

- Soil bearing is checked at service level (ASD) and includes the footing's own weight; shear, moment and crushing at strength level (LRFD), ACI 318-14, loads combined to ASCE 7-16.
- Which way round the bearing sits on the pad is not known: it is checked both ways and the worse is shown.
- Wood on the concrete: the wood's own bearing -- a sill or plate in Fc-perp, a post's end grain in Fc -- can govern below the concrete value; it is not checked on this sheet.

Applied Loads	Location	Trib. Width	Dead	Roof Live	Comments
1 - Point (lb)	--	N/A	297	335	Linked from: Header #12, Support 2

SpotFtg Hdr #13-1

PASSED

Spot Footing 1' 4" x 2' x 11" deep -- Unreinforced (Plain)

Level: Basement | f'c 3,000 psi | soil 1,500 psf | in a foundation wall (10" x 124" stem, Footing #8) | on it: Header #13 on (1) trimmer | ACI 318-14

Controls: Soil Bearing Pressure 45% used
Adequacy 55.5% (capacity to spare)

WHAT LOADS IT

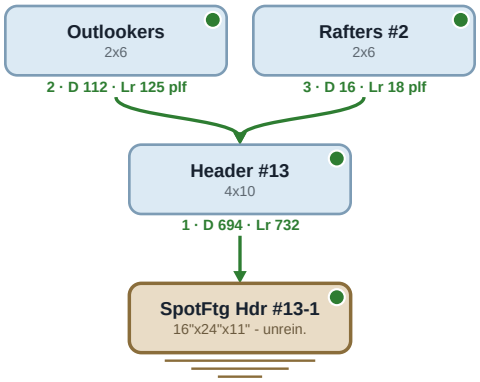

ELEVATION IN THE FOUNDATION WALL

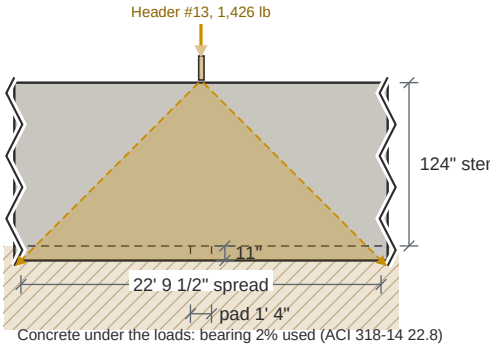

PLAN -- PLAIN CONCRETE, NO REINFORCING

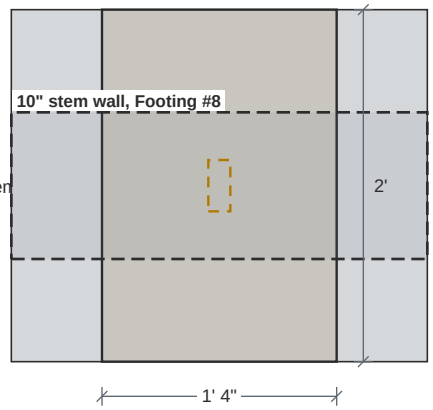

Unreinforced (Plain)

Carrying: Dead 694 lb Roof Live 732 lb

Design Results	Actual	Allowed	Result	Method	Load Combination
Soil Bearing Pressure (psf)	668	1,500	Passed (45% used)	ASD	D+Lr
One-Way Shear X (lbs)	104	6,310	Passed (2% used)	LRFD	1.2D+1.6Lr+L
Two-Way Shear (lbs)	1,319	33,690	Passed (4% used)	LRFD	1.2D+1.6Lr+L
Moment X (ft-lbs)	430	2,958	Passed (15% used)	LRFD	1.2D+1.6Lr+L
Moment Y (ft-lbs)	303	4,437	Passed (7% used)	LRFD	1.2D+1.6Lr+L
Crushing (lbs)	2,003	16,065	Passed (12% used)	LRFD	1.2D+1.6Lr+L
Minimum Thickness (in)	11"	8" min	Meets the minimum	code	ACI 318-14 Ch. 14

Footing Specification

as entered on the footing, and the mat the check selected

Geometry	
Shape	Rectangular
Bears on it	Header #13 on (1) trimmer
Bearing size	1 1/2" x 3 1/2"
Footing width	1' 4"
Footing length	2'
Footing depth	11"

Footing Properties	
Concrete strength	3,000 psi
Soil bearing pressure	1,500 psf
Concrete density	145 pcf

Soil Properties	
Soil depth above footing	0

Reinforcement	
Reinforcing	none -- plain concrete
Plain concrete (no reinforcing)	Yes

- Soil bearing is checked at service level (ASD) and includes the footing's own weight; shear, moment and crushing at strength level (LRFD), ACI 318-14, loads combined to ASCE 7-16.
- Which way round the bearing sits on the pad is not known: it is checked both ways and the worse is shown.
- Wood on the concrete: the wood's own bearing -- a sill or plate in Fc-perp, a post's end grain in Fc -- can govern below the concrete value; it is not checked on this sheet.

Applied Loads	Location	Trib. Width	Dead	Roof Live	Comments
1 - Point (lb)	--	N/A	694.1	731.5	Linked from: Header #13, Support 1

SpotFtg Hdr #13-2

PASSED

Spot Footing 1' 4" x 2' x 11" deep -- Unreinforced (Plain)

Level: Basement | f'c 3,000 psi | soil 1,500 psf | in a foundation wall (10" x 124" stem, Footing #8) | on it: Header #13 on (1) trimmer | ACI 318-14

Controls: Soil Bearing Pressure 44% used
Adequacy 55.5% (capacity to spare)

WHAT LOADS IT

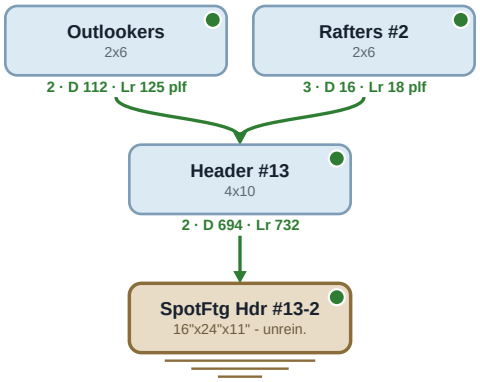

ELEVATION IN THE FOUNDATION WALL

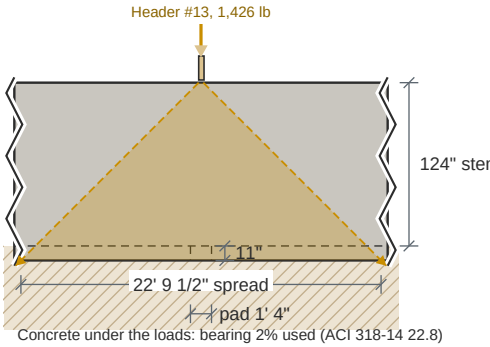

PLAN -- PLAIN CONCRETE, NO REINFORCING

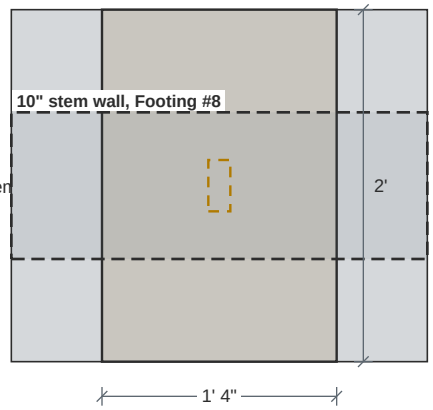

Unreinforced (Plain)

Carrying: Dead 694 lb Roof Live 732 lb

Design Results	Actual	Allowed	Result	Method	Load Combination
Soil Bearing Pressure (psf)	667	1,500	Passed (44% used)	ASD	D+Lr
One-Way Shear X (lbs)	104	6,310	Passed (2% used)	LRFD	1.2D+1.6Lr+L
Two-Way Shear (lbs)	1,319	33,690	Passed (4% used)	LRFD	1.2D+1.6Lr+L
Moment X (ft-lbs)	430	2,958	Passed (15% used)	LRFD	1.2D+1.6Lr+L
Moment Y (ft-lbs)	303	4,437	Passed (7% used)	LRFD	1.2D+1.6Lr+L
Crushing (lbs)	2,003	16,065	Passed (12% used)	LRFD	1.2D+1.6Lr+L
Minimum Thickness (in)	11"	8" min	Meets the minimum	code	ACI 318-14 Ch. 14

Footing Specification

as entered on the footing, and the mat the check selected

Geometry	
Shape	Rectangular
Bears on it	Header #13 on (1) trimmer
Bearing size	1 1/2" x 3 1/2"
Footing width	1' 4"
Footing length	2'
Footing depth	11"

Footing Properties	
Concrete strength	3,000 psi
Soil bearing pressure	1,500 psf
Concrete density	145 pcf

Soil Properties	
Soil depth above footing	0

Reinforcement	
Reinforcing	none -- plain concrete
Plain concrete (no reinforcing)	Yes

- Soil bearing is checked at service level (ASD) and includes the footing's own weight; shear, moment and crushing at strength level (LRFD), ACI 318-14, loads combined to ASCE 7-16.
- Which way round the bearing sits on the pad is not known: it is checked both ways and the worse is shown.
- Wood on the concrete: the wood's own bearing -- a sill or plate in Fc-perp, a post's end grain in Fc -- can govern below the concrete value; it is not checked on this sheet.

Applied Loads	Location	Trib. Width	Dead	Roof Live	Comments
1 - Point (lb)	--	N/A	694	731.5	Linked from: Header #13, Support 2

SpotFtg Hdr #14-1

PASSED

Spot Footing 1' 4" x 2' x 10" deep -- Unreinforced (Plain)

Level: Basement | f'c 3,000 psi | soil 1,500 psf | in a foundation wall (8" x 50" stem, Footing #9) | on it: Header #14 on (1) trimmer | ACI 318-14

Controls: Soil Bearing Pressure 65% used
Adequacy 35.3% (capacity to spare)

WHAT LOADS IT

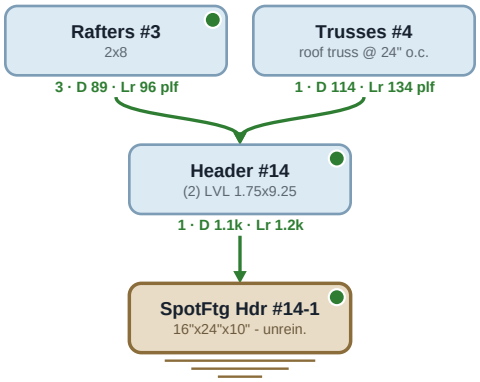

ELEVATION IN THE FOUNDATION WALL

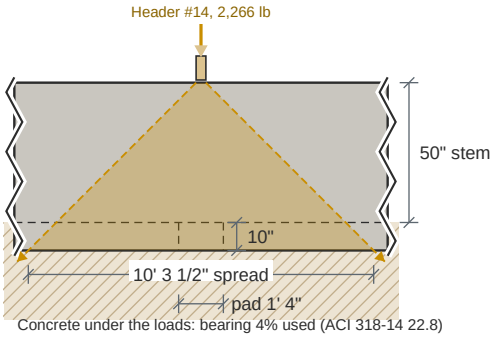

PLAN -- PLAIN CONCRETE, NO REINFORCING

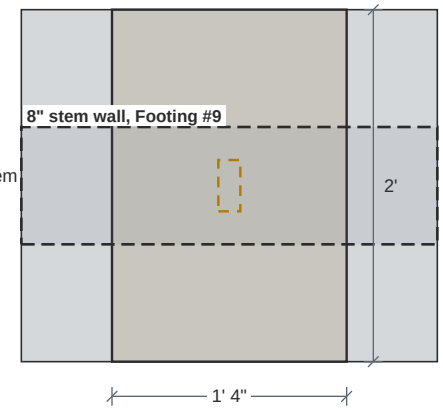

Unreinforced (Plain)

Carrying: Dead 1,087 lb Roof Live 1,179 lb

Design Results	Actual	Allowed	Result	Method	Load Combination
Soil Bearing Pressure (psf)	971	1,500	Passed (65% used)	ASD	D+Lr
One-Way Shear X (lbs)	299	5,609	Passed (5% used)	LRFD	1.2D+1.6Lr+L
Two-Way Shear (lbs)	2,283	27,342	Passed (8% used)	LRFD	1.2D+1.6Lr+L
Moment X (ft-lbs)	686	2,337	Passed (29% used)	LRFD	1.2D+1.6Lr+L
Moment Y (ft-lbs)	483	3,505	Passed (14% used)	LRFD	1.2D+1.6Lr+L
Crushing (lbs)	3,191	16,065	Passed (20% used)	LRFD	1.2D+1.6Lr+L
Minimum Thickness (in)	10"	8" min	Meets the minimum	code	ACI 318-14 Ch. 14

Footing Specification

as entered on the footing, and the mat the check selected

Geometry	
Shape	Rectangular
Bears on it	Header #14 on (1) trimmer
Bearing size	1 1/2" x 3 1/2"
Footing width	1' 4"
Footing length	2'
Footing depth	10"

Footing Properties	
Concrete strength	3,000 psi
Soil bearing pressure	1,500 psf
Concrete density	145 pcf

Soil Properties	
Soil depth above footing	0

Reinforcement	
Reinforcing	none -- plain concrete
Plain concrete (no reinforcing)	Yes

- Soil bearing is checked at service level (ASD) and includes the footing's own weight; shear, moment and crushing at strength level (LRFD), ACI 318-14, loads combined to ASCE 7-16.
- Which way round the bearing sits on the pad is not known: it is checked both ways and the worse is shown.
- Wood on the concrete: the wood's own bearing -- a sill or plate in Fc-perp, a post's end grain in Fc -- can govern below the concrete value; it is not checked on this sheet.

Applied Loads	Location	Trib. Width	Dead	Roof Live	Comments
1 - Point (lb)	--	N/A	1,087	1,179	Linked from: Header #14, Support 1

SpotFtg Hdr #14-2

PASSED

Spot Footing 1' 4" x 2' x 10" deep -- Unreinforced (Plain)

Level: Basement | f'c 3,000 psi | soil 1,500 psf | in a foundation wall (8" x 50" stem, Footing #9) | on it: Header #14 on (1) trimmer | ACI 318-14

Controls: Soil Bearing Pressure 65% used
Adequacy 35.3% (capacity to spare)

WHAT LOADS IT

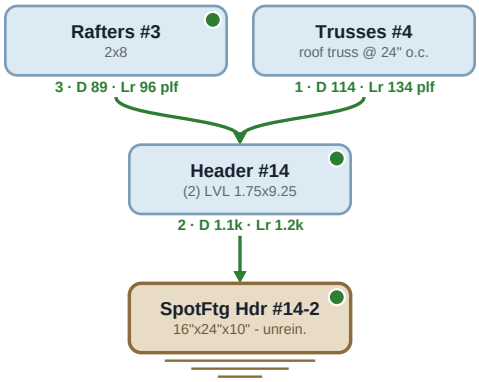

ELEVATION IN THE FOUNDATION WALL

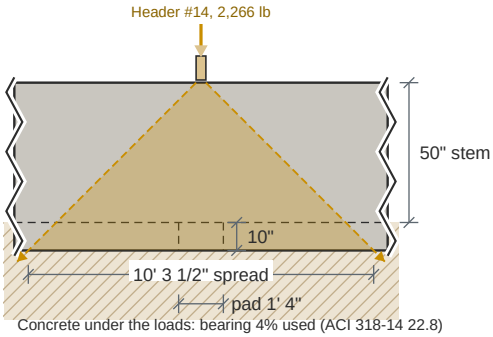

PLAN -- PLAIN CONCRETE, NO REINFORCING

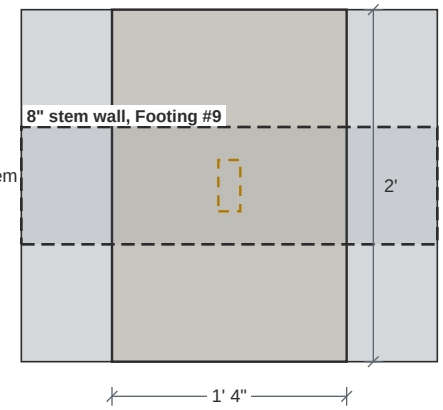

Unreinforced (Plain)

Carrying: Dead 1,087 lb Roof Live 1,179 lb

Design Results	Actual	Allowed	Result	Method	Load Combination
Soil Bearing Pressure (psf)	971	1,500	Passed (65% used)	ASD	D+Lr
One-Way Shear X (lbs)	299	5,609	Passed (5% used)	LRFD	1.2D+1.6Lr+L
Two-Way Shear (lbs)	2,283	27,342	Passed (8% used)	LRFD	1.2D+1.6Lr+L
Moment X (ft-lbs)	686	2,337	Passed (29% used)	LRFD	1.2D+1.6Lr+L
Moment Y (ft-lbs)	483	3,505	Passed (14% used)	LRFD	1.2D+1.6Lr+L
Crushing (lbs)	3,191	16,065	Passed (20% used)	LRFD	1.2D+1.6Lr+L
Minimum Thickness (in)	10"	8" min	Meets the minimum	code	ACI 318-14 Ch. 14

Footing Specification

as entered on the footing, and the mat the check selected

Geometry	
Shape	Rectangular
Bears on it	Header #14 on (1) trimmer
Bearing size	1 1/2" x 3 1/2"
Footing width	1' 4"
Footing length	2'
Footing depth	10"

Footing Properties	
Concrete strength	3,000 psi
Soil bearing pressure	1,500 psf
Concrete density	145 pcf

Soil Properties	
Soil depth above footing	0

Reinforcement	
Reinforcing	none -- plain concrete
Plain concrete (no reinforcing)	Yes

- Soil bearing is checked at service level (ASD) and includes the footing's own weight; shear, moment and crushing at strength level (LRFD), ACI 318-14, loads combined to ASCE 7-16.
- Which way round the bearing sits on the pad is not known: it is checked both ways and the worse is shown.
- Wood on the concrete: the wood's own bearing -- a sill or plate in Fc-perp, a post's end grain in Fc -- can govern below the concrete value; it is not checked on this sheet.

Applied Loads	Location	Trib. Width	Dead	Roof Live	Comments
1 - Point (lb)	--	N/A	1,087	1,179	Linked from: Header #14, Support 2

SpotFtg Hdr #15-1

Spot Footing 1' 4" x 1' 4" x 10" deep -- Unreinforced (Plain)

Level: Basement | f'c 3,000 psi | soil 1,500 psf | in a foundation wall (6" x 24" stem, Footing #11) | on it: Header #15 on (1) trimmer | ACI 318-14

PASSED

Controls: Soil Bearing Pressure 59% used
Adequacy 41.2% (capacity to spare)

WHAT LOADS IT

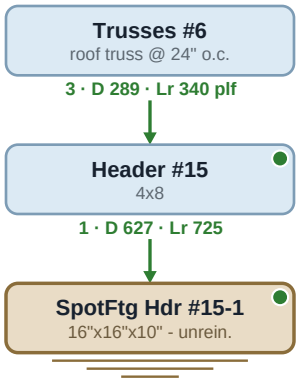

ELEVATION IN THE FOUNDATION WALL

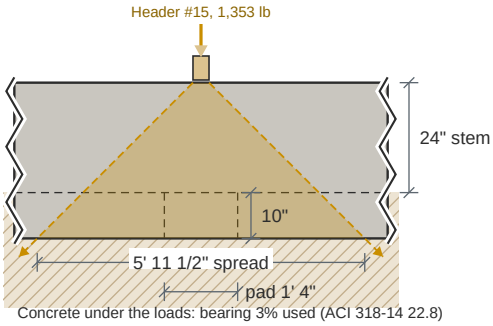

PLAN -- PLAIN CONCRETE, NO REINFORCING

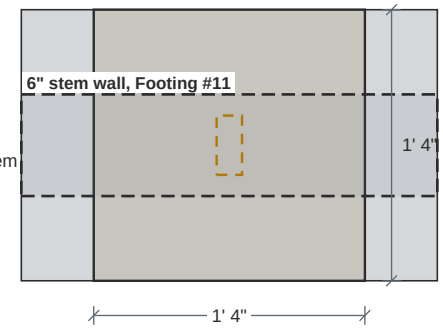

Unreinforced (Plain)

Carrying: Dead 627 lb Roof Live 725 lb

Design Results	Actual	Allowed	Result	Method	Load Combination
Soil Bearing Pressure (psf)	882	1,500	Passed (59% used)	ASD	D+Lr
Two-Way Shear (lbs)	1,097	27,342	Passed (4% used)	LRFD	1.2D+1.6Lr+L
Moment X (ft-lbs)	253	2,337	Passed (11% used)	LRFD	1.2D+1.6Lr+L
Moment Y (ft-lbs)	290	2,337	Passed (12% used)	LRFD	1.2D+1.6Lr+L
Crushing (lbs)	1,913	16,065	Passed (12% used)	LRFD	1.2D+1.6Lr+L
Minimum Thickness (in)	10"	8" min	Meets the minimum	code	ACI 318-14 Ch. 14

Footing Specification

as entered on the footing, and the mat the check selected

Geometry	
Shape	Square
Bears on it	Header #15 on (1) trimmer
Bearing size	1 1/2" x 3 1/2"
Footing width	1' 4"
Footing length	1' 4"
Footing depth	10"

Footing Properties	
Concrete strength	3,000 psi
Soil bearing pressure	1,500 psf
Concrete density	145 pcf

Soil Properties	
Soil depth above footing	0

Reinforcement	
Reinforcing	none -- plain concrete
Plain concrete (no reinforcing)	Yes

- Soil bearing is checked at service level (ASD) and includes the footing's own weight; shear, moment and crushing at strength level (LRFD), ACI 318-14, loads combined to ASCE 7-16.
- Wood on the concrete: the wood's own bearing -- a sill or plate in Fc-perp, a post's end grain in Fc -- can govern below the concrete value; it is not checked on this sheet.

Applied Loads	Location	Trib. Width	Dead	Roof Live	Comments
1 - Point (lb)	--	N/A	627.1	725.5	Linked from: Header #15, Support 1

SpotFtg Hdr #15-2

Spot Footing 1' 4" x 1' 4" x 10" deep -- Unreinforced (Plain)

Level: Basement | f'c 3,000 psi | soil 1,500 psf | in a foundation wall (6" x 24" stem, Footing #11) | on it: Header #15 on (1) trimmer | ACI 318-14

PASSED

Controls: Soil Bearing Pressure 59% used
Adequacy 41.4% (capacity to spare)

WHAT LOADS IT

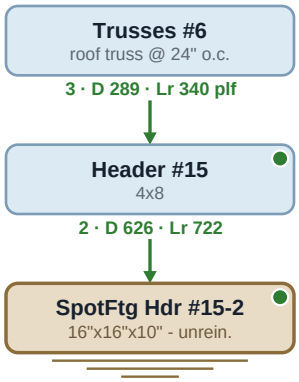

ELEVATION IN THE FOUNDATION WALL

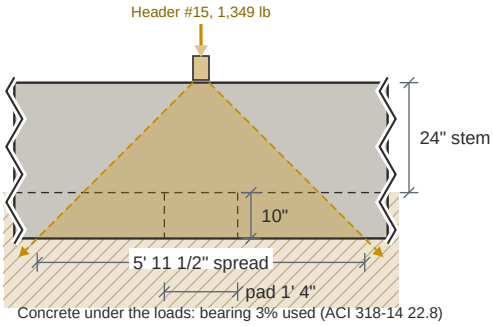

PLAN -- PLAIN CONCRETE, NO REINFORCING

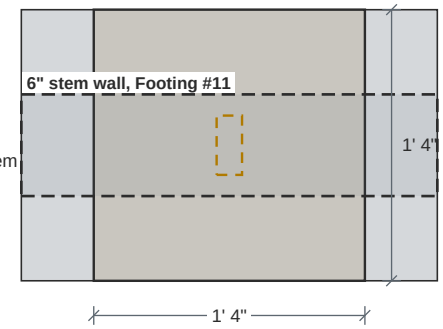

Unreinforced (Plain)

Carrying: Dead 626 lb Roof Live 722 lb

Design Results	Actual	Allowed	Result	Method	Load Combination
Soil Bearing Pressure (psf)	880	1,500	Passed (59% used)	ASD	D+Lr
Two-Way Shear (lbs)	1,094	27,342	Passed (4% used)	LRFD	1.2D+1.6Lr+L
Moment X (ft-lbs)	252	2,337	Passed (11% used)	LRFD	1.2D+1.6Lr+L
Moment Y (ft-lbs)	289	2,337	Passed (12% used)	LRFD	1.2D+1.6Lr+L
Crushing (lbs)	1,908	16,065	Passed (12% used)	LRFD	1.2D+1.6Lr+L
Minimum Thickness (in)	10"	8" min	Meets the minimum	code	ACI 318-14 Ch. 14

Footing Specification

as entered on the footing, and the mat the check selected

Geometry	
Shape	Square
Bears on it	Header #15 on (1) trimmer
Bearing size	1 1/2" x 3 1/2"
Footing width	1' 4"
Footing length	1' 4"
Footing depth	10"

Footing Properties	
Concrete strength	3,000 psi
Soil bearing pressure	1,500 psf
Concrete density	145 pcf

Soil Properties	
Soil depth above footing	0

Reinforcement	
Reinforcing	none -- plain concrete
Plain concrete (no reinforcing)	Yes

- Soil bearing is checked at service level (ASD) and includes the footing's own weight; shear, moment and crushing at strength level (LRFD), ACI 318-14, loads combined to ASCE 7-16.
- Wood on the concrete: the wood's own bearing -- a sill or plate in Fc-perp, a post's end grain in Fc -- can govern below the concrete value; it is not checked on this sheet.

Applied Loads	Location	Trib. Width	Dead	Roof Live	Comments
1 - Point (lb)	--	N/A	626.4	722.5	Linked from: Header #15, Support 2

SpotFtg Hdr #16-1

PASSED

Spot Footing 2' x 2' x 10" deep -- Bot. (3) #4 each way

Controls: Soil Bearing Pressure 70% used
Adequacy 29.6% (capacity to spare)

Level: Basement | f'c 3,000 psi | rebar Fy 60 ksi | soil 1,500 psf | in a foundation wall (6" x 24" stem, Footing #12); the wall ends 1 3/4" right of the pad | on it: Header #16 on (1) trimmer | ACI 318-14

WHAT LOADS IT

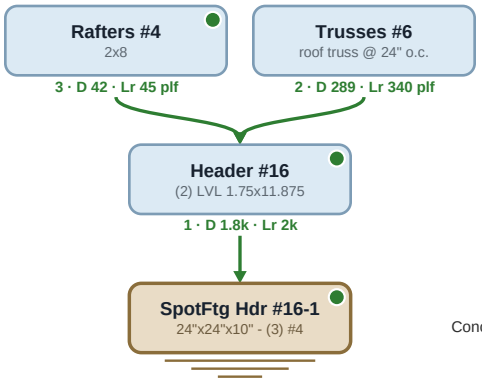

ELEVATION IN THE FOUNDATION WALL

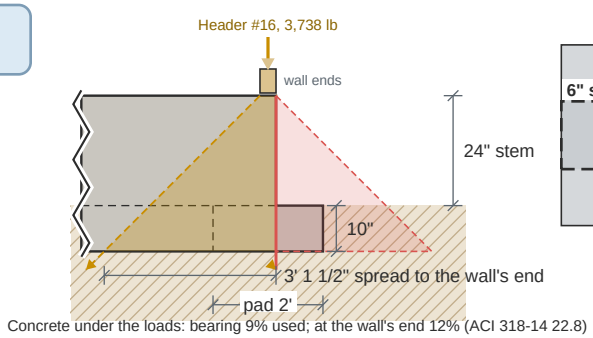

Concrete under the loads: bearing 9% used; at the wall's end 12% (ACI 318-14 22.8)

PLAN -- BOTTOM MAT

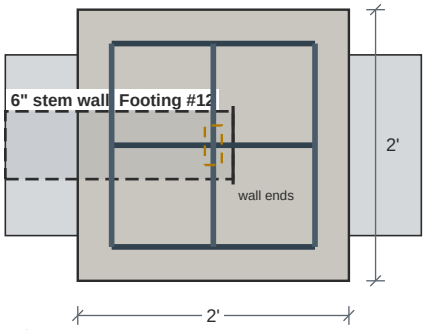

Bot. (3) #4 each way

Carrying: Dead 1,756 lb Roof Live 1,982 lb

Design Results	Actual	Allowed	Result	Method	Load Combination
Soil Bearing Pressure (psf)	1,055	1,500	Passed (70% used)	ASD	D+Lr
One-Way Shear X (lbs)	880	12,324	Passed (7% used)	LRFD	1.2D+1.6Lr+L
One-Way Shear Y (lbs)	1,100	12,324	Passed (9% used)	LRFD	1.2D+1.6Lr+L
Two-Way Shear (lbs)	4,546	35,704	Passed (13% used)	LRFD	1.2D+1.6Lr+L
Moment X (ft-lbs)	1,134	16,081	Passed (7% used)	LRFD	1.2D+1.6Lr+L
Moment Y (ft-lbs)	1,239	16,081	Passed (8% used)	LRFD	1.2D+1.6Lr+L
Crushing (lbs)	5,279	17,404	Passed (30% used)	LRFD	1.2D+1.6Lr+L
Depth Above Bars (in)	6 3/4"	6" min	Meets the minimum	code	ACI 318-14 13.3.1.2

Footing Specification

as entered on the footing, and the mat the check selected

Geometry	
Shape	Square
Bears on it	Header #16 on (1) trimmer
Bearing size	1 1/2" x 3 1/2"
Footing width	2'
Footing length	2'
Footing depth	10"

Footing Properties	
Steel yield strength	60,000 psi
Concrete strength	3,000 psi
Soil bearing pressure	1,500 psf
Concrete density	145 pcf
Bottom reinf. cover	3"

Soil Properties	
Soil depth above footing	0

Reinforcement	
Bottom mat	Bot. (3) #4 each way
Bars along the width	(3) #4
Bars along the length	(3) #4
Selected for	moment and minimum steel
Plain concrete (no reinforcing)	No

- Soil bearing is checked at service level (ASD) and includes the footing's own weight; shear, moment and crushing at strength level (LRFD), ACI 318-14, loads combined to ASCE 7-16.
- Reinforcement is selected for the moment and for minimum steel (ACI 318-14: 0.0018 Ag for Grade 60), at no more than 3h or 18 in.
- Wood on the concrete: the wood's own bearing -- a sill or plate in Fc-perp, a post's end grain in Fc -- can govern below the concrete value; it is not checked on this sheet.

Applied Loads	Location	Trib. Width	Dead	Roof Live	Comments
1 - Point (lb)	--	N/A	1,756	1,982	Linked from: Header #16, Support 1

SpotFtg Hdr #16-2

PASSED

Spot Footing 3' 6" x 2' x 10" deep -- Unreinforced (Plain)

Controls: Soil Bearing Pressure 91% used
Adequacy 8.5% (capacity to spare)

Level: Basement | f'c 3,000 psi | soil 1,500 psf | in a foundation wall (6" x 36" stem, typed); the wall ends 13 1/4" left of the pad and 11 1/4" right of the pad | 2 loads placed: Header #18 5 1/2" x 5 1/2", Header #16 5 1/2" x 5 1/2" | ACI

WHAT LOADS IT

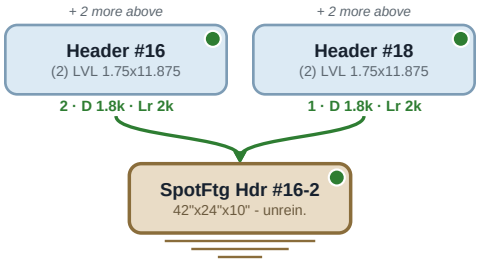

ELEVATION IN THE FOUNDATION WALL

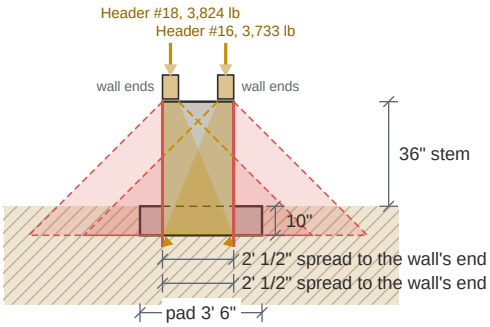

Concrete under the loads: bearing 7% used; at the wall's end 8% (ACI 318-14 22.8)

PLAN -- PLAIN CONCRETE, NO REINFORCING

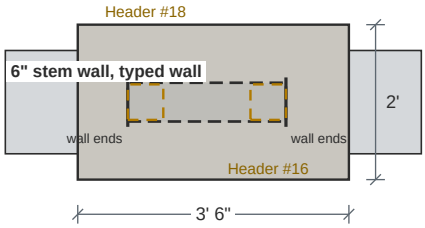

Unreinforced (Plain)

Carrying: Dead 3,556 lb Roof Live 4,001 lb

Design Results	Actual	Allowed	Result	Method	Load Combination
Soil Bearing Pressure (psf)	1,372	1,500	Passed (91% used)	ASD	D+Lr
One-Way Shear X (lbs)	556	14,723	Passed (4% used)	LRFD	1.2D+1.6Lr+L
One-Way Shear Y (lbs)	424	8,413	Passed (5% used)	LRFD	1.2D+1.6Lr+L
Two-Way Shear (lbs)	3,465	37,764	Passed (9% used)	LRFD	1.2D+1.6Lr+L (Header #16)
Moment X (ft-lbs)	1,058	2,556	Passed (41% used)	LRFD	1.2D+1.6Lr+L (Header #18)
Moment Y (ft-lbs)	1,181	3,505	Passed (34% used)	LRFD	1.2D+1.6Lr+L
Crushing (lbs)	5,398	92,565	Passed (6% used)	LRFD	1.2D+1.6Lr+L (Header #18)
Minimum Thickness (in)	10"	8" min	Meets the minimum	code	ACI 318-14 Ch. 14

Footing Specification

as entered on the footing, and the mat the check selected

Geometry	
Shape	Rectangular
Bears on it	Header #16 on (1) trimmer; Header #18 on (1) trimmer -- side by side, 3 x 3 1/2 together
Bearing size	3" x 3 1/2"
Footing width	3' 6"
Footing length	2'
Footing depth	10"

Footing Properties	
Concrete strength	3,000 psi
Soil bearing pressure	1,500 psf
Concrete density	145 pcf

Soil Properties	
Soil depth above footing	0

Reinforcement	
Reinforcing	none -- plain concrete
Plain concrete (no reinforcing)	Yes

- Soil bearing is checked at service level (ASD) and includes the footing's own weight; shear, moment and crushing at strength level (LRFD), ACI 318-14, loads combined to ASCE 7-16.
- 2 loads on the pad, each where it lands: the soil pressure runs 1,028 to 1,372 psf.
- Under Header #18: a band 17.5 in wide (its width + 0.75 d each side), that width of the plain section.

Applied Loads	Location	Trib. Width	Dead	Roof Live	Comments
1 - Point (lb)	X -10 1/2", Y 0"	N/A	1,799	2,025	Linked from: Header #18, Support 1
2 - Point (lb)	X 8 1/2", Y 0"	N/A	1,756	1,976	Linked from: Header #16, Support 2

SpotFtg Hdr #17-1

PASSED

Spot Footing 1' 4" x 1' 4" x 8" deep -- Unreinforced (Plain)

Level: Basement | f'c 3,000 psi | soil 1,500 psf | in a foundation wall (6" x 24" stem, typed); the wall ends 1 3/4" right of the pad | on it: Header #17 on (1) trimmer | ACI 318-14

Controls: Soil Bearing Pressure 53% used
Adequacy 46.5% (capacity to spare)

WHAT LOADS IT

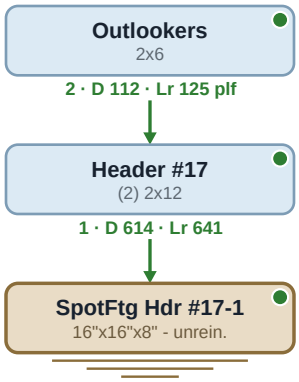

ELEVATION IN THE FOUNDATION WALL

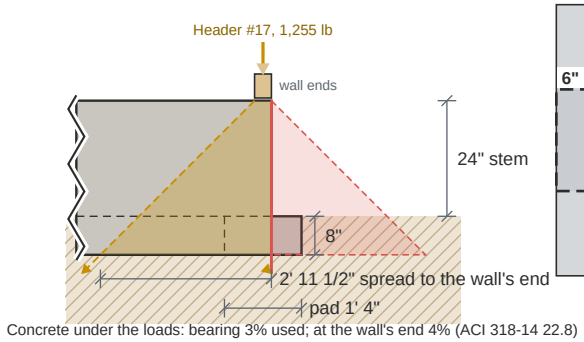

Concrete under the loads: bearing 3% used; at the wall's end 4% (ACI 318-14 22.8)

PLAN -- PLAIN CONCRETE, NO REINFORCING

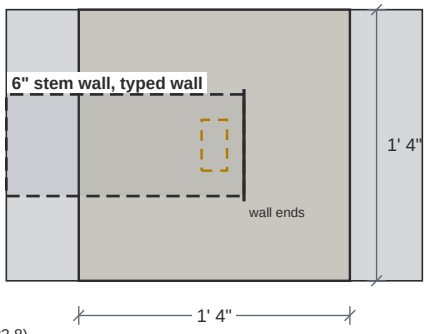

Unreinforced (Plain)

Carrying: Dead 614 lb Roof Live 641 lb

Design Results	Actual	Allowed	Result	Method	Load Combination
Soil Bearing Pressure (psf)	802	1,500	Passed (53% used)	ASD	D+Lr
One-Way Shear X (lbs)	55	4,207	Passed (1% used)	LRFD	1.2D+1.6Lr+L
One-Way Shear Y (lbs)	138	4,207	Passed (3% used)	LRFD	1.2D+1.6Lr+L
Two-Way Shear (lbs)	1,297	17,308	Passed (7% used)	LRFD	1.2D+1.6Lr+L
Moment X (ft-lbs)	241	1,315	Passed (18% used)	LRFD	1.2D+1.6Lr+L
Moment Y (ft-lbs)	267	1,315	Passed (20% used)	LRFD	1.2D+1.6Lr+L
Crushing (lbs)	1,762	13,770	Passed (13% used)	LRFD	1.2D+1.6Lr+L
Minimum Thickness (in)	8"	8" min	Meets the minimum	code	ACI 318-14 Ch. 14

Footing Specification

as entered on the footing, and the mat the check selected

Geometry	
Shape	Square
Bears on it	Header #17 on (1) trimmer
Bearing size	1 1/2" x 3"
Footing width	1' 4"
Footing length	1' 4"
Footing depth	8"

Footing Properties	
Concrete strength	3,000 psi
Soil bearing pressure	1,500 psf
Concrete density	145 pcf

Soil Properties	
Soil depth above footing	0

Reinforcement	
Reinforcing	none -- plain concrete
Plain concrete (no reinforcing)	Yes

- Soil bearing is checked at service level (ASD) and includes the footing's own weight; shear, moment and crushing at strength level (LRFD), ACI 318-14, loads combined to ASCE 7-16.
- Wood on the concrete: the wood's own bearing -- a sill or plate in Fc-perp, a post's end grain in Fc -- can govern below the concrete value; it is not checked on this sheet.

Applied Loads	Location	Trib. Width	Dead	Roof Live	Comments
1 - Point (lb)	--	N/A	614	640.6	Linked from: Header #17, Support 1

SpotFtg Hdr #17-2

PASSED

Spot Footing 1' 4" x 1' 4" x 8" deep -- Unreinforced (Plain)

Level: Basement | f'c 3,000 psi | soil 1,500 psf | in a foundation wall (6" x 24" stem, typed); the wall ends 1 3/4" left of the pad | on it: Header #17 on (1) trimmer | ACI 318-14

Controls: Soil Bearing Pressure 53% used
Adequacy 46.5% (capacity to spare)

WHAT LOADS IT

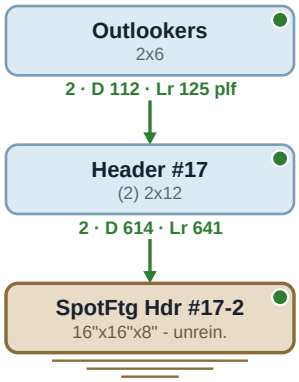

ELEVATION IN THE FOUNDATION WALL

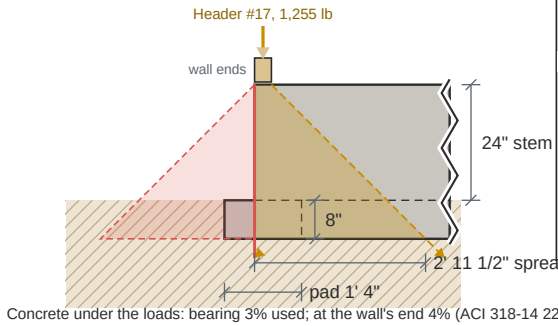

Concrete under the loads: bearing 3% used; at the wall's end 4% (ACI 318-14 22.8)

PLAN -- PLAIN CONCRETE, NO REINFORCING

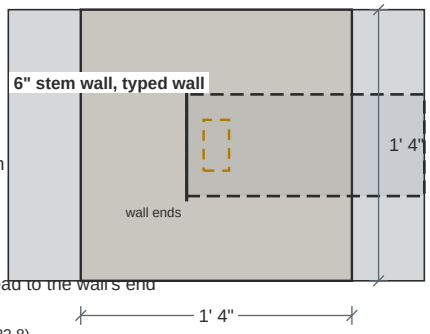

Unreinforced (Plain)

Carrying: Dead 614 lb Roof Live 641 lb

Design Results	Actual	Allowed	Result	Method	Load Combination
Soil Bearing Pressure (psf)	802	1,500	Passed (53% used)	ASD	D+Lr
One-Way Shear X (lbs)	55	4,207	Passed (1% used)	LRFD	1.2D+1.6Lr+L
One-Way Shear Y (lbs)	138	4,207	Passed (3% used)	LRFD	1.2D+1.6Lr+L
Two-Way Shear (lbs)	1,297	17,308	Passed (7% used)	LRFD	1.2D+1.6Lr+L
Moment X (ft-lbs)	241	1,315	Passed (18% used)	LRFD	1.2D+1.6Lr+L
Moment Y (ft-lbs)	267	1,315	Passed (20% used)	LRFD	1.2D+1.6Lr+L
Crushing (lbs)	1,762	13,770	Passed (13% used)	LRFD	1.2D+1.6Lr+L
Minimum Thickness (in)	8"	8" min	Meets the minimum	code	ACI 318-14 Ch. 14

Footing Specification

as entered on the footing, and the mat the check selected

Geometry	
Shape	Square
Bears on it	Header #17 on (1) trimmer
Bearing size	1 1/2" x 3"
Footing width	1' 4"
Footing length	1' 4"
Footing depth	8"

Footing Properties	
Concrete strength	3,000 psi
Soil bearing pressure	1,500 psf
Concrete density	145 pcf

Soil Properties	
Soil depth above footing	0

Reinforcement	
Reinforcing	none -- plain concrete
Plain concrete (no reinforcing)	Yes

- Soil bearing is checked at service level (ASD) and includes the footing's own weight; shear, moment and crushing at strength level (LRFD), ACI 318-14, loads combined to ASCE 7-16.
- Wood on the concrete: the wood's own bearing -- a sill or plate in Fc-perp, a post's end grain in Fc -- can govern below the concrete value; it is not checked on this sheet.

Applied Loads	Location	Trib. Width	Dead	Roof Live	Comments
1 - Point (lb)	--	N/A	614	640.6	Linked from: Header #17, Support 2

SpotFtg Hdr #18-2

PASSED

Spot Footing 4' x 2' x 10" deep -- Bot. (3) #4 the long way, (5) #4 the short way; Top (3) #4 the long way

Controls: Soil Bearing Pressure 98% used
Adequacy 1.9% (capacity to spare)

Level: Basement | f'c 3,000 psi | rebar Fy 60 ksi | soil 1,500 psf | in a foundation wall (6" x 24" stem, Footing #12); the wall ends 12 3/4" left of the pad and 20 3/4" right of the pad | 2 loads placed: Header #18 1 1/2" x 3 1/2", Beam #8 6"

WHAT LOADS IT

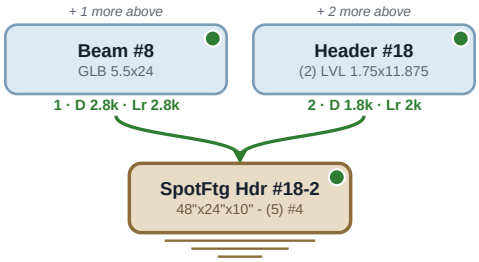

ELEVATION IN THE FOUNDATION WALL

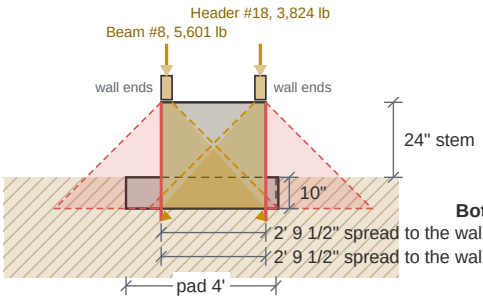

PLAN -- BOTTOM MAT

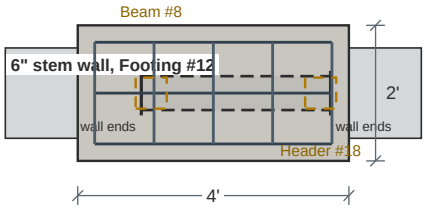

Bot. (3) #4 the long way, (5) #4 the short way; Top (3) #4 the long way

Concrete under the loads: bearing 14% used; at the wall's end 18% (ACI 318-14 22.8)

Carrying: Dead 4,601 lb Roof Live 4,825 lb

Design Results	Actual	Allowed	Result	Method	Load Combination
Soil Bearing Pressure (psf)	1,471	1,500	Passed (98% used)	ASD	D+Lr
One-Way Shear X (lbs)	2,207	24,648	Passed (9% used)	LRFD	1.2D+1.6Lr+L
One-Way Shear Y (lbs)	2,211	12,324	Passed (18% used)	LRFD	1.2D+1.6Lr+L
Two-Way Shear (lbs)	4,367	35,704	Passed (12% used)	LRFD	1.2D+1.6Lr+L (Header #18)
Moment X (ft-lbs)	985	5,876	Passed (17% used)	LRFD	1.2D+1.6Lr+L (Header #18)
Moment Y (ft-lbs)	997	16,081	Passed (6% used)	LRFD	1.2D+1.6Lr+L
Moment Y (top) (ft-lbs)	1,695	16,081	Passed (11% used)	LRFD	1.2D+1.6Lr+L
Crushing (lbs)	5,398	17,404	Passed (31% used)	LRFD	1.2D+1.6Lr+L (Header #18)
Depth Above Bars (in)	6 3/4"	6" min	Meets the minimum	code	ACI 318-14 13.3.1.2

Footing Specification

as entered on the footing, and the mat the check selected

Geometry	
Shape	Rectangular
Bears on it	concrete pier 5 1/2 x 5 1/2, as set on the pad
Bearing size	5 1/2" x 5 1/2"
Footing width	4'
Footing length	2'
Footing depth	10"

Footing Properties	
Steel yield strength	60,000 psi
Concrete strength	3,000 psi
Soil bearing pressure	1,500 psf
Concrete density	145 pcf
Top reinf. cover	3"
Bottom reinf. cover	3"

Soil Properties	
Soil depth above footing	0

Reinforcement	
Bottom mat	Bot. (3) #4 the long way, (5) #4 the short way; Top (3) #4 the long way
Bars the long way	(3) #4
Bars the short way	(5) #4
Selected for	moment and minimum steel
Plain concrete (no reinforcing)	No

- Soil bearing is checked at service level (ASD) and includes the footing's own weight; shear, moment and crushing at strength level (LRFD), ACI 318-14, loads combined to ASCE 7-16.
- Reinforcement is selected for the moment and for minimum steel (ACI 318-14: 0.0018 Ag for Grade 60), at no more than 3h or 18 in.
- 2 loads on the pad, each where it lands: the soil pressure runs 1,127 to 1,471 psf.
- Under Header #18: a band 10.4 in wide (its width + 0.75 d each side), the mat's share of it.
- The pad hogs between the loads: top bars.

Applied Loads	Location	Trib. Width	Dead	Roof Live	Comments
1 - Point (lb)	X 19", Y 0"	N/A	1,799	2,025	Linked from: Header #18, Support 2
2 - Point (lb)	X -11", Y 0"	N/A	2,801	2,800	Linked from: Beam #8, Support 1

SpotFtg Hdr #19-1

Spot Footing 2' x 2' x 8" deep -- Unreinforced (Plain)

Level: Basement | f'c 3,000 psi | soil 1,500 psf | on it: Header #19 on (2) trimmers | ACI 318-14

PASSED

Controls: Soil Bearing Pressure 67% used
Adequacy 33.2% (capacity to spare)

WHAT LOADS IT

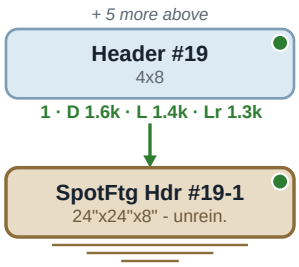

SECTION

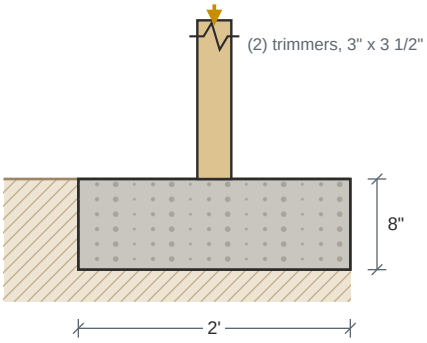

PLAN -- PLAIN CONCRETE, NO REINFORCING

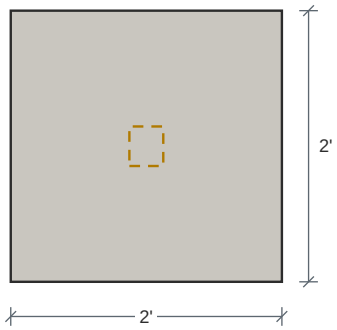

Unreinforced (Plain)

Carrying: Dead 1,616 lb Floor Live 1,377 lb Roof Live 1,300 lb

Design Results	Actual	Allowed	Result	Method	Load Combination
Soil Bearing Pressure (psf)	1,003	1,500	Passed (67% used)	ASD	D+0.75L+0.75Lr
One-Way Shear X (lbs)	956	6,310	Passed (15% used)	LRFD	1.2D+1.6Lr+L
One-Way Shear Y (lbs)	1,012	6,310	Passed (16% used)	LRFD	1.2D+1.6Lr+L
Two-Way Shear (lbs)	4,595	19,406	Passed (24% used)	LRFD	1.2D+1.6Lr+L
Moment X (ft-lbs)	1,159	1,972	Passed (59% used)	LRFD	1.2D+1.6Lr+L
Moment Y (ft-lbs)	1,186	1,972	Passed (60% used)	LRFD	1.2D+1.6Lr+L
Crushing (lbs)	5,396	32,130	Passed (17% used)	LRFD	1.2D+1.6Lr+L
Minimum Thickness (in)	8"	8" min	Meets the minimum	code	ACI 318-14 Ch. 14

Footing Specification

as entered on the footing, and the mat the check selected

Geometry	
Shape	Square
Bears on it	Header #19 on (2) trimmers
Bearing size	3" x 3 1/2"
Footing width	2'
Footing length	2'
Footing depth	8"

Footing Properties	
Concrete strength	3,000 psi
Soil bearing pressure	1,500 psf
Concrete density	145 pcf

Soil Properties	
Soil depth above footing	0

Reinforcement	
Reinforcing	none -- plain concrete
Plain concrete (no reinforcing)	Yes

- Soil bearing is checked at service level (ASD) and includes the footing's own weight; shear, moment and crushing at strength level (LRFD), ACI 318-14, loads combined to ASCE 7-16.
- Wood on the concrete: the wood's own bearing -- a sill or plate in Fc-perp, a post's end grain in Fc -- can govern below the concrete value; it is not checked on this sheet.

Applied Loads	Location	Trib. Width	Dead	Floor Live	Roof Live	Comments
1 - Point (lb)	--	N/A	1,616	1,377	1,300	Linked from: Header #19, Support 1

SpotFtg Hdr #19-2

Spot Footing 2' x 2' x 10" deep -- Unreinforced (Plain)

Level: Basement | f'c 3,000 psi | soil 1,500 psf | on it: Header #19 on (2) trimmers | ACI 318-14

PASSED

Controls: Soil Bearing Pressure 64% used
Adequacy 36.1% (capacity to spare)

WHAT LOADS IT

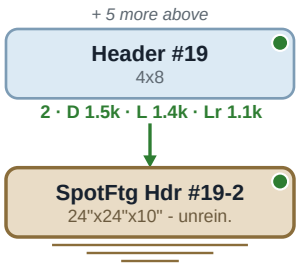

SECTION

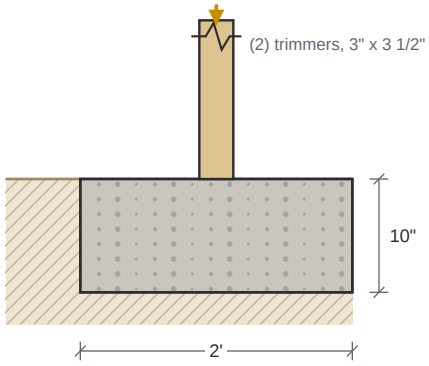

PLAN -- PLAIN CONCRETE, NO REINFORCING

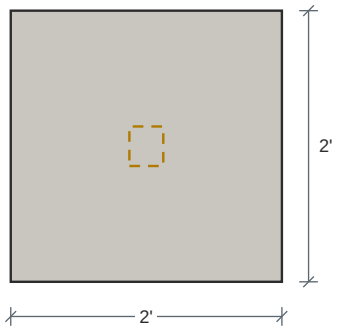

Unreinforced (Plain)

Carrying: Dead 1,468 lb Floor Live 1,383 lb Roof Live 1,126 lb

Design Results	Actual	Allowed	Result	Method	Load Combination
Soil Bearing Pressure (psf)	958	1,500	Passed (64% used)	ASD	D+0.75L+0.75Lr
One-Way Shear X (lbs)	464	8,413	Passed (6% used)	LRFD	1.2D+1.6Lr+L
One-Way Shear Y (lbs)	515	8,413	Passed (6% used)	LRFD	1.2D+1.6Lr+L
Two-Way Shear (lbs)	3,861	31,470	Passed (12% used)	LRFD	1.2D+1.6Lr+L
Moment X (ft-lbs)	1,063	3,505	Passed (30% used)	LRFD	1.2D+1.6Lr+L
Moment Y (ft-lbs)	1,087	3,505	Passed (31% used)	LRFD	1.2D+1.6Lr+L
Crushing (lbs)	4,947	32,130	Passed (15% used)	LRFD	1.2D+1.6Lr+L
Minimum Thickness (in)	10"	8" min	Meets the minimum	code	ACI 318-14 Ch. 14

Footing Specification

as entered on the footing, and the mat the check selected

Geometry	
Shape	Square
Bears on it	Header #19 on (2) trimmers
Bearing size	3" x 3 1/2"
Footing width	2'
Footing length	2'
Footing depth	10"

Footing Properties	
Concrete strength	3,000 psi
Soil bearing pressure	1,500 psf
Concrete density	145 pcf

Soil Properties	
Soil depth above footing	0

Reinforcement	
Reinforcing	none -- plain concrete
Plain concrete (no reinforcing)	Yes

- Soil bearing is checked at service level (ASD) and includes the footing's own weight; shear, moment and crushing at strength level (LRFD), ACI 318-14, loads combined to ASCE 7-16.
- Wood on the concrete: the wood's own bearing -- a sill or plate in Fc-perp, a post's end grain in Fc -- can govern below the concrete value; it is not checked on this sheet.

Applied Loads	Location	Trib. Width	Dead	Floor Live	Roof Live	Comments
1 - Point (lb)	--	N/A	1,468	1,383	1,126	Linked from: Header #19, Support 2

SpotFtg Hdr #20-1

PASSED

Spot Footing 1' 4" x 1' 4" x 10" deep -- Unreinforced (Plain)

Level: Basement | f'c 3,000 psi | soil 1,500 psf | in a foundation wall (6" x 24" stem, typed); the wall ends 6" left of the pad | on it: concrete pier 5 1/2 x 5 1/2, as set on the pad | ACI 318-14

Controls: Soil Bearing Pressure 48% used
Adequacy 52.4% (capacity to spare)

WHAT LOADS IT

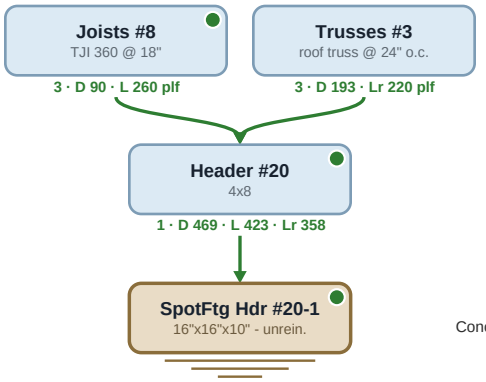

ELEVATION IN THE FOUNDATION WALL

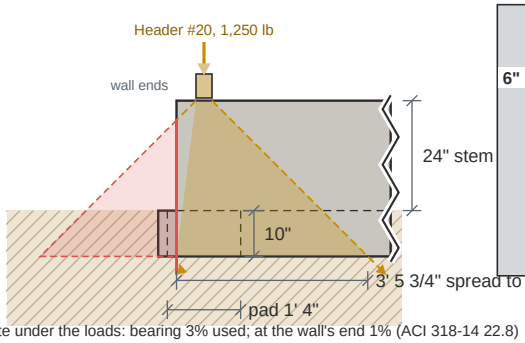

Concrete under the loads: bearing 3% used; at the wall's end 1% (ACI 318-14 22.8)

PLAN -- PLAIN CONCRETE, NO REINFORCING

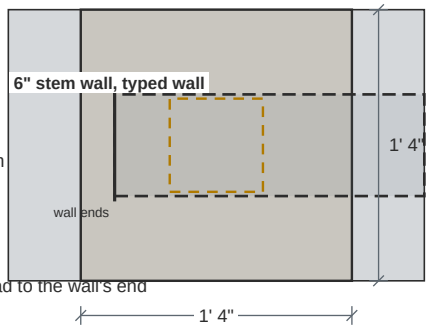

Unreinforced (Plain)

Carrying: Dead 469 lb Floor Live 423 lb Roof Live 358 lb

Design Results	Actual	Allowed	Result	Method	Load Combination
Soil Bearing Pressure (psf)	714	1,500	Passed (48% used)	ASD	D+0.75L+0.75Lr
Two-Way Shear (lbs)	449	37,764	Passed (1% used)	LRFD	1.2D+1.6Lr+L
Moment X (ft-lbs)	112	2,337	Passed (5% used)	LRFD	1.2D+1.6Lr+L
Moment Y (ft-lbs)	112	2,337	Passed (5% used)	LRFD	1.2D+1.6Lr+L
Crushing (lbs)	1,558	92,565	Passed (2% used)	LRFD	1.2D+1.6Lr+L
Minimum Thickness (in)	10"	8" min	Meets the minimum	code	ACI 318-14 Ch. 14

Footing Specification

as entered on the footing, and the mat the check selected

Geometry	
Shape	Square
Bears on it	concrete pier 5 1/2 x 5 1/2, as set on the pad
Bearing size	5 1/2" x 5 1/2"
Footing width	1' 4"
Footing length	1' 4"
Footing depth	10"

Footing Properties	
Concrete strength	3,000 psi
Soil bearing pressure	1,500 psf
Concrete density	145 pcf

Soil Properties	
Soil depth above footing	0

Reinforcement	
Reinforcing	none -- plain concrete
Plain concrete (no reinforcing)	Yes

- Soil bearing is checked at service level (ASD) and includes the footing's own weight; shear, moment and crushing at strength level (LRFD), ACI 318-14, loads combined to ASCE 7-16.

Applied Loads	Location	Trib. Width	Dead	Floor Live	Roof Live	Comments
1 - Point (lb)	--	N/A	469.4	423.2	357.5	Linked from: Header #20, Support 1

SpotFtg Hdr #20-2

Spot Footing 1' 4" x 1' 4" x 8" deep -- Unreinforced (Plain)

Level: Basement | f'c 3,000 psi | soil 1,500 psf | in a foundation wall (6" x 24" stem, typed) | on it: Header #20 on (1) trimmer | ACI 318-14

PASSED

Controls: Soil Bearing Pressure 46% used
Adequacy 54% (capacity to spare)

WHAT LOADS IT

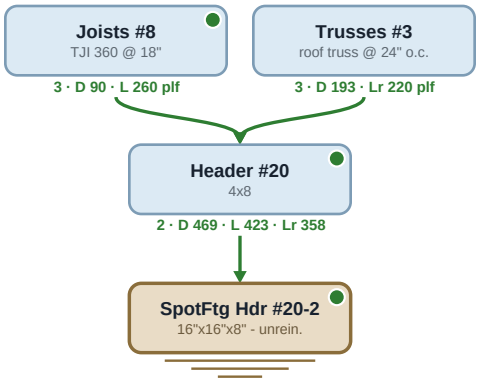

ELEVATION IN THE FOUNDATION WALL

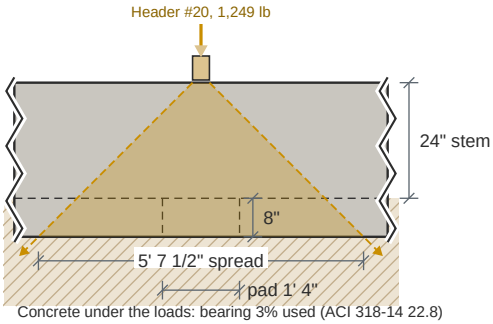

PLAN -- PLAIN CONCRETE, NO REINFORCING

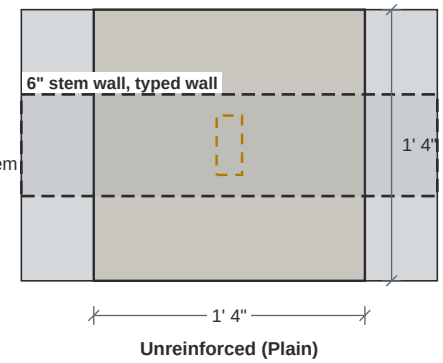

Unreinforced (Plain)

Carrying: Dead 469 lb Floor Live 423 lb Roof Live 358 lb

Design Results	Actual	Allowed	Result	Method	Load Combination
Soil Bearing Pressure (psf)	689	1,500	Passed (46% used)	ASD	D+0.75L+0.75Lr
One-Way Shear X (lbs)	24	4,207	Passed (1% used)	LRFD	1.2D+1.6Lr+L
One-Way Shear Y (lbs)	122	4,207	Passed (3% used)	LRFD	1.2D+1.6Lr+L
Two-Way Shear (lbs)	1,124	16,601	Passed (7% used)	LRFD	1.2D+1.6Lr+L
Moment X (ft-lbs)	206	1,315	Passed (16% used)	LRFD	1.2D+1.6Lr+L
Moment Y (ft-lbs)	236	1,315	Passed (18% used)	LRFD	1.2D+1.6Lr+L
Crushing (lbs)	1,557	16,065	Passed (10% used)	LRFD	1.2D+1.6Lr+L
Minimum Thickness (in)	8"	8" min	Meets the minimum	code	ACI 318-14 Ch. 14

Footing Specification

as entered on the footing, and the mat the check selected

Geometry	
Shape	Square
Bears on it	Header #20 on (1) trimmer
Bearing size	1 1/2" x 3 1/2"
Footing width	1' 4"
Footing length	1' 4"
Footing depth	8"

Footing Properties	
Concrete strength	3,000 psi
Soil bearing pressure	1,500 psf
Concrete density	145 pcf

Soil Properties	
Soil depth above footing	0

Reinforcement	
Reinforcing	none -- plain concrete
Plain concrete (no reinforcing)	Yes

- Soil bearing is checked at service level (ASD) and includes the footing's own weight; shear, moment and crushing at strength level (LRFD), ACI 318-14, loads combined to ASCE 7-16.
- Wood on the concrete: the wood's own bearing -- a sill or plate in Fc-perp, a post's end grain in Fc -- can govern below the concrete value; it is not checked on this sheet.

Applied Loads	Location	Trib. Width	Dead	Floor Live	Roof Live	Comments
1 - Point (lb)	--	N/A	468.7	422.5	357.5	Linked from: Header #20, Support 2

SpotFtg Hdr #21-1

PASSED

Spot Footing 2' x 2' x 10" deep -- Bot. (3) #4 each way

Controls: Soil Bearing Pressure 87% used
Adequacy 13.3% (capacity to spare)

Level: Basement | f'c 3,000 psi | rebar Fy 60 ksi | soil 1,500 psf | in a foundation wall (6" x 12" stem, typed) | on it: Header #21 on (1) trimmer | ACI 318-14

WHAT LOADS IT

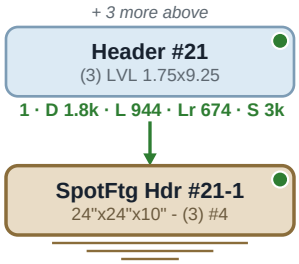

ELEVATION IN THE FOUNDATION WALL

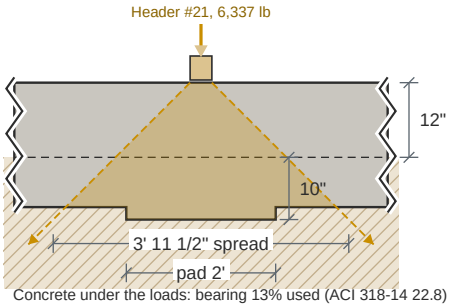

PLAN -- BOTTOM MAT

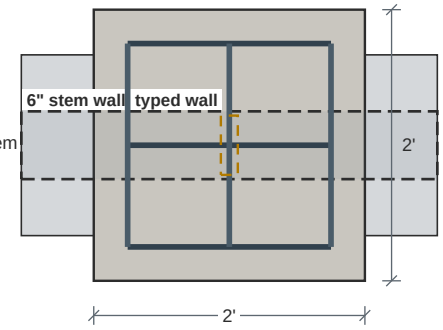

Carrying: Floor Live 944 lb Roof Live 674 lb Dead 1,754 lb Snow 2,965 lb

Design Results	Actual	Allowed	Result	Method	Load Combination
Soil Bearing Pressure (psf)	1,301	1,500	Passed (87% used)	ASD	D+S
One-Way Shear X (lbs)	1,015	12,324	Passed (8% used)	LRFD	1.2D+1.6S+L
One-Way Shear Y (lbs)	1,623	12,324	Passed (13% used)	LRFD	1.2D+1.6S+L
Two-Way Shear (lbs)	6,521	33,148	Passed (20% used)	LRFD	1.2D+1.6S+L
Moment X (ft-lbs)	1,545	16,081	Passed (10% used)	LRFD	1.2D+1.6S+L
Moment Y (ft-lbs)	1,828	16,081	Passed (11% used)	LRFD	1.2D+1.6S+L
Crushing (lbs)	7,792	26,106	Passed (30% used)	LRFD	1.2D+1.6S+L
Depth Above Bars (in)	6 3/4"	6" min	Meets the minimum	code	ACI 318-14 13.3.1.2

Footing Specification

as entered on the footing, and the mat the check selected

Geometry	
Shape	Square
Bears on it	Header #21 on (1) trimmer
Bearing size	1 1/2" x 5 1/4"
Footing width	2'
Footing length	2'
Footing depth	10"

Footing Properties	
Steel yield strength	60,000 psi
Concrete strength	3,000 psi
Soil bearing pressure	1,500 psf
Concrete density	145 pcf
Bottom reinf. cover	3"

Soil Properties	
Soil depth above footing	0

Reinforcement	
Bottom mat	Bot. (3) #4 each way
Bars along the width	(3) #4
Bars along the length	(3) #4
Selected for	moment and minimum steel
Plain concrete (no reinforcing)	No

- Soil bearing is checked at service level (ASD) and includes the footing's own weight; shear, moment and crushing at strength level (LRFD), ACI 318-14, loads combined to ASCE 7-16.
- Reinforcement is selected for the moment and for minimum steel (ACI 318-14: 0.0018 Ag for Grade 60), at no more than 3h or 18 in.
- Wood on the concrete: the wood's own bearing -- a sill or plate in Fc-perp, a post's end grain in Fc -- can govern below the concrete value; it is not checked on this sheet.

Applied Loads	Location	Trib. Width	Dead	Floor Live	Roof Live	Snow	Comments
1 - Point (lb)	--	N/A	1,754	944	674.3	2,965	Linked from: Header #21, Support 1

SpotFtg Hdr #23-2

PASSED

Spot Footing 1' 4" x 1' 4" x 8" deep -- Unreinforced (Plain)

Level: Basement | f'c 3,000 psi | soil 1,500 psf | in a foundation wall (6" x 24" stem, typed) | on it: Header #23 on (1) trimmer | ACI 318-14

Controls: Soil Bearing Pressure 90% used
Adequacy 10.3% (capacity to spare)

WHAT LOADS IT

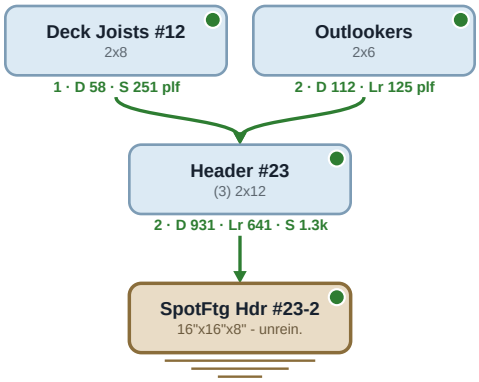

ELEVATION IN THE FOUNDATION WALL

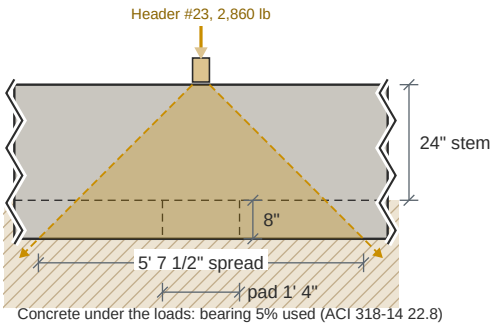

PLAN -- PLAIN CONCRETE, NO REINFORCING

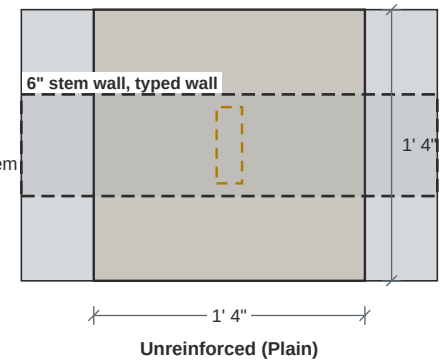

Unreinforced (Plain)

Carrying: Dead 931 lb Roof Live 641 lb Snow 1,289 lb

Design Results	Actual	Allowed	Result	Method	Load Combination
Soil Bearing Pressure (psf)	1,345	1,500	Passed (90% used)	ASD	D+S
One-Way Shear Y (lbs)	248	4,207	Passed (6% used)	LRFD	1.2D+1.6S+L
Two-Way Shear (lbs)	2,201	15,774	Passed (14% used)	LRFD	1.2D+1.6S+L
Moment X (ft-lbs)	391	1,315	Passed (30% used)	LRFD	1.2D+1.6S+L
Moment Y (ft-lbs)	481	1,315	Passed (37% used)	LRFD	1.2D+1.6S+L
Crushing (lbs)	3,179	20,655	Passed (15% used)	LRFD	1.2D+1.6S+L
Minimum Thickness (in)	8"	8" min	Meets the minimum	code	ACI 318-14 Ch. 14

Footing Specification

as entered on the footing, and the mat the check selected

Geometry	
Shape	Square
Bears on it	Header #23 on (1) trimmer
Bearing size	1 1/2" x 4 1/2"
Footing width	1' 4"
Footing length	1' 4"
Footing depth	8"

Footing Properties	
Concrete strength	3,000 psi
Soil bearing pressure	1,500 psf
Concrete density	145 pcf

Soil Properties	
Soil depth above footing	0

Reinforcement	
Reinforcing	none -- plain concrete
Plain concrete (no reinforcing)	Yes

- Soil bearing is checked at service level (ASD) and includes the footing's own weight; shear, moment and crushing at strength level (LRFD), ACI 318-14, loads combined to ASCE 7-16.
- Wood on the concrete: the wood's own bearing -- a sill or plate in Fc-perp, a post's end grain in Fc -- can govern below the concrete value; it is not checked on this sheet.

Applied Loads	Location	Trib. Width	Dead	Roof Live	Snow	Comments
1 - Point (lb)	--	N/A	930.7	640.6	1,289	Linked from: Header #23, Support 2

SpotFtg Hdr #24-1

PASSED

Spot Footing 1' 4" x 2' x 10" deep -- Unreinforced (Plain)

Level: Basement | f'c 3,000 psi | soil 1,500 psf | in a foundation wall (10" x 24" stem, typed) | on it: Header #24 on (1) trimmer | ACI 318-14

Controls: Soil Bearing Pressure 64% used
Adequacy 36.4% (capacity to spare)

WHAT LOADS IT

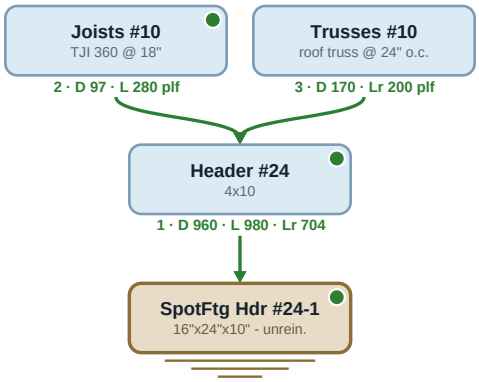

ELEVATION IN THE FOUNDATION WALL

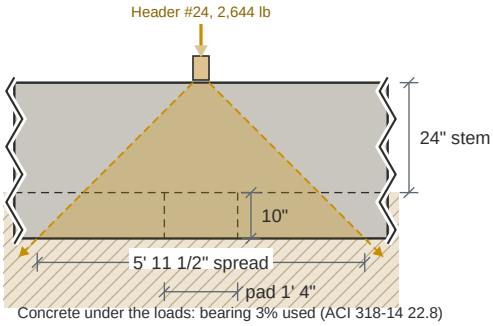

PLAN -- PLAIN CONCRETE, NO REINFORCING

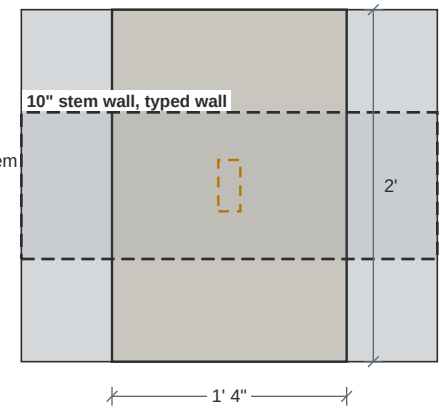

Unreinforced (Plain)

Carrying: Dead 960 lb Floor Live 980 lb Roof Live 704 lb

Design Results	Actual	Allowed	Result	Method	Load Combination
Soil Bearing Pressure (psf)	954	1,500	Passed (64% used)	ASD	D+0.75L+0.75Lr
One-Way Shear X (lbs)	305	5,609	Passed (5% used)	LRFD	1.2D+1.6Lr+L
Two-Way Shear (lbs)	2,331	27,342	Passed (9% used)	LRFD	1.2D+1.6Lr+L
Moment X (ft-lbs)	700	2,337	Passed (30% used)	LRFD	1.2D+1.6Lr+L
Moment Y (ft-lbs)	493	3,505	Passed (14% used)	LRFD	1.2D+1.6Lr+L
Crushing (lbs)	3,258	16,065	Passed (20% used)	LRFD	1.2D+1.6Lr+L
Minimum Thickness (in)	10"	8" min	Meets the minimum	code	ACI 318-14 Ch. 14

Footing Specification

as entered on the footing, and the mat the check selected

Geometry	
Shape	Rectangular
Bears on it	Header #24 on (1) trimmer
Bearing size	1 1/2" x 3 1/2"
Footing width	1' 4"
Footing length	2'
Footing depth	10"

Footing Properties	
Concrete strength	3,000 psi
Soil bearing pressure	1,500 psf
Concrete density	145 pcf

Soil Properties	
Soil depth above footing	0

Reinforcement	
Reinforcing	none -- plain concrete
Plain concrete (no reinforcing)	Yes

- Soil bearing is checked at service level (ASD) and includes the footing's own weight; shear, moment and crushing at strength level (LRFD), ACI 318-14, loads combined to ASCE 7-16.
- Which way round the bearing sits on the pad is not known: it is checked both ways and the worse is shown.
- Wood on the concrete: the wood's own bearing -- a sill or plate in Fc-perp, a post's end grain in Fc -- can govern below the concrete value; it is not checked on this sheet.

Applied Loads	Location	Trib. Width	Dead	Floor Live	Roof Live	Comments
1 - Point (lb)	--	N/A	960.1	980	703.5	Linked from: Header #24, Support 1

SpotFtg Hdr #24-2

Spot Footing 1' 4" x 2' x 10" deep -- Unreinforced (Plain)

Level: Basement | f'c 3,000 psi | soil 1,500 psf | in a foundation wall (8" x 24" stem, typed) | on it: Header #24 on (1) trimmer | ACI 318-14

PASSED

Controls: Soil Bearing Pressure 64% used
Adequacy 36.4% (capacity to spare)

WHAT LOADS IT

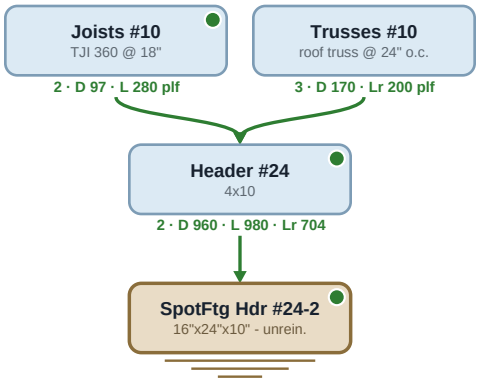

ELEVATION IN THE FOUNDATION WALL

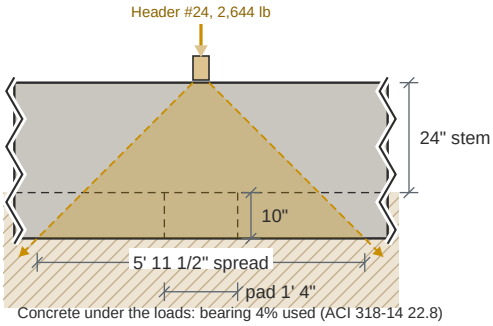

PLAN -- PLAIN CONCRETE, NO REINFORCING

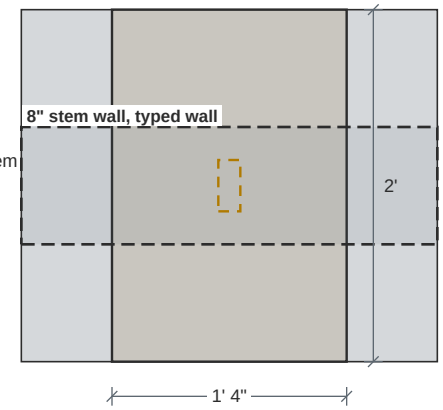

Unreinforced (Plain)

Carrying: Dead 960 lb Floor Live 980 lb Roof Live 704 lb

Design Results	Actual	Allowed	Result	Method	Load Combination
Soil Bearing Pressure (psf)	954	1,500	Passed (64% used)	ASD	D+0.75L+0.75Lr
One-Way Shear X (lbs)	305	5,609	Passed (5% used)	LRFD	1.2D+1.6Lr+L
Two-Way Shear (lbs)	2,331	27,342	Passed (9% used)	LRFD	1.2D+1.6Lr+L
Moment X (ft-lbs)	700	2,337	Passed (30% used)	LRFD	1.2D+1.6Lr+L
Moment Y (ft-lbs)	493	3,505	Passed (14% used)	LRFD	1.2D+1.6Lr+L
Crushing (lbs)	3,258	16,065	Passed (20% used)	LRFD	1.2D+1.6Lr+L
Minimum Thickness (in)	10"	8" min	Meets the minimum	code	ACI 318-14 Ch. 14

Footing Specification

as entered on the footing, and the mat the check selected

Geometry	
Shape	Rectangular
Bears on it	Header #24 on (1) trimmer
Bearing size	1 1/2" x 3 1/2"
Footing width	1' 4"
Footing length	2'
Footing depth	10"

Footing Properties	
Concrete strength	3,000 psi
Soil bearing pressure	1,500 psf
Concrete density	145 pcf

Soil Properties	
Soil depth above footing	0

Reinforcement	
Reinforcing	none -- plain concrete
Plain concrete (no reinforcing)	Yes

- Soil bearing is checked at service level (ASD) and includes the footing's own weight; shear, moment and crushing at strength level (LRFD), ACI 318-14, loads combined to ASCE 7-16.
- Which way round the bearing sits on the pad is not known: it is checked both ways and the worse is shown.
- Wood on the concrete: the wood's own bearing -- a sill or plate in Fc-perp, a post's end grain in Fc -- can govern below the concrete value; it is not checked on this sheet.

Applied Loads	Location	Trib. Width	Dead	Floor Live	Roof Live	Comments
1 - Point (lb)	--	N/A	960.1	980	703.5	Linked from: Header #24, Support 2

SpotFtg Hdr #25-1

Spot Footing 1' 4" x 1' 4" x 10" deep -- Unreinforced (Plain)

Level: Basement | f'c 3,000 psi | soil 1,500 psf | on it: Header #25 on (1) trimmer | ACI 318-14

PASSED

Controls: Soil Bearing Pressure 97% used
Adequacy 2.7% (capacity to spare)

WHAT LOADS IT

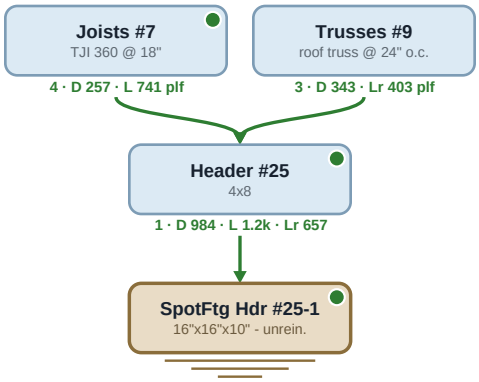

SECTION

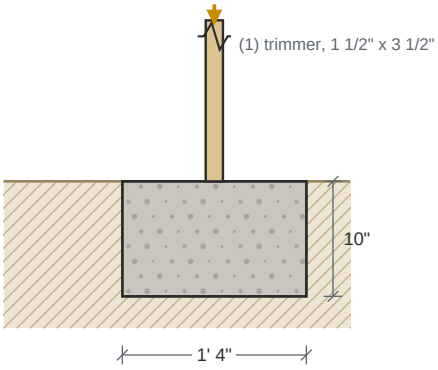

PLAN -- PLAIN CONCRETE, NO REINFORCING

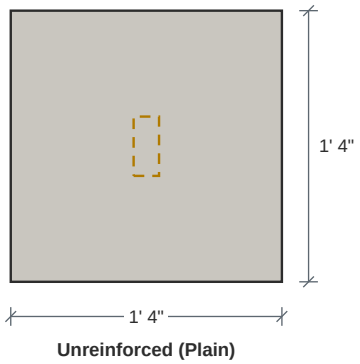

Unreinforced (Plain)

Carrying: Dead 984 lb Floor Live 1,204 lb Roof Live 657 lb

Design Results	Actual	Allowed	Result	Method	Load Combination
Soil Bearing Pressure (psf)	1,460	1,500	Passed (97% used)	ASD	D+0.75L+0.75Lr
Two-Way Shear (lbs)	1,970	27,342	Passed (7% used)	LRFD	1.2D+1.6Lr+L
Moment X (ft-lbs)	454	2,337	Passed (19% used)	LRFD	1.2D+1.6Lr+L
Moment Y (ft-lbs)	520	2,337	Passed (22% used)	LRFD	1.2D+1.6Lr+L
Crushing (lbs)	3,437	16,065	Passed (21% used)	LRFD	1.2D+1.6Lr+L
Minimum Thickness (in)	10"	8" min	Meets the minimum	code	ACI 318-14 Ch. 14

Footing Specification

as entered on the footing, and the mat the check selected

Geometry	
Shape	Square
Bears on it	Header #25 on (1) trimmer
Bearing size	1 1/2" x 3 1/2"
Footing width	1' 4"
Footing length	1' 4"
Footing depth	10"

Footing Properties	
Concrete strength	3,000 psi
Soil bearing pressure	1,500 psf
Concrete density	145 pcf

Soil Properties	
Soil depth above footing	0

Reinforcement	
Reinforcing	none -- plain concrete
Plain concrete (no reinforcing)	Yes

- Soil bearing is checked at service level (ASD) and includes the footing's own weight; shear, moment and crushing at strength level (LRFD), ACI 318-14, loads combined to ASCE 7-16.
- Wood on the concrete: the wood's own bearing -- a sill or plate in Fc-perp, a post's end grain in Fc -- can govern below the concrete value; it is not checked on this sheet.

Applied Loads	Location	Trib. Width	Dead	Floor Live	Roof Live	Comments
1 - Point (lb)	--	N/A	983.7	1,204	657.3	Linked from: Header #25, Support 1

SpotFtg Hdr #25-2

Spot Footing 1' 4" x 1' 4" x 10" deep -- Unreinforced (Plain)

Level: Basement | f'c 3,000 psi | soil 1,500 psf | on it: Header #25 on (1) trimmer | ACI 318-14

PASSED

Controls: Soil Bearing Pressure 97% used
Adequacy 2.7% (capacity to spare)

WHAT LOADS IT

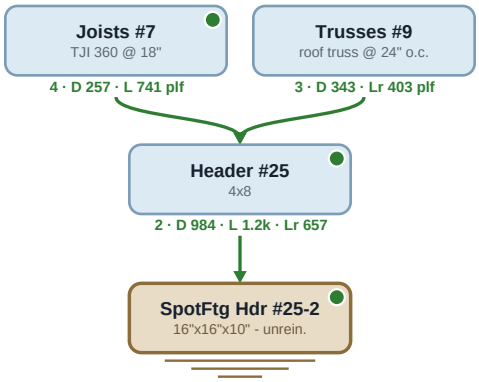

SECTION

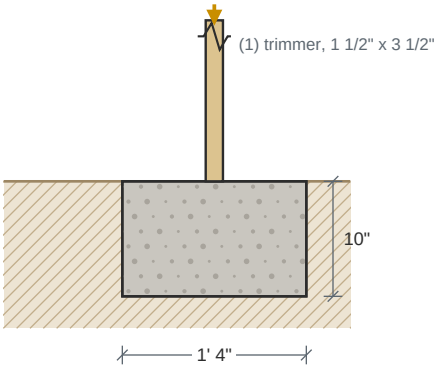

PLAN -- PLAIN CONCRETE, NO REINFORCING

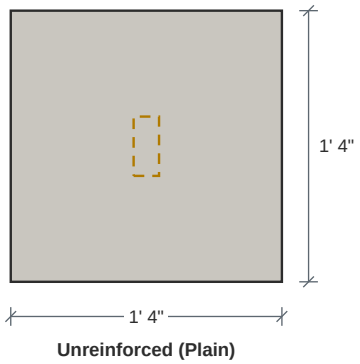

Unreinforced (Plain)

Carrying: Dead 984 lb Floor Live 1,204 lb Roof Live 657 lb

Design Results	Actual	Allowed	Result	Method	Load Combination
Soil Bearing Pressure (psf)	1,460	1,500	Passed (97% used)	ASD	D+0.75L+0.75Lr
Two-Way Shear (lbs)	1,970	27,342	Passed (7% used)	LRFD	1.2D+1.6Lr+L
Moment X (ft-lbs)	454	2,337	Passed (19% used)	LRFD	1.2D+1.6Lr+L
Moment Y (ft-lbs)	520	2,337	Passed (22% used)	LRFD	1.2D+1.6Lr+L
Crushing (lbs)	3,437	16,065	Passed (21% used)	LRFD	1.2D+1.6Lr+L
Minimum Thickness (in)	10"	8" min	Meets the minimum	code	ACI 318-14 Ch. 14

Footing Specification

as entered on the footing, and the mat the check selected

Geometry	
Shape	Square
Bears on it	Header #25 on (1) trimmer
Bearing size	1 1/2" x 3 1/2"
Footing width	1' 4"
Footing length	1' 4"
Footing depth	10"

Footing Properties	
Concrete strength	3,000 psi
Soil bearing pressure	1,500 psf
Concrete density	145 pcf

Soil Properties	
Soil depth above footing	0

Reinforcement	
Reinforcing	none -- plain concrete
Plain concrete (no reinforcing)	Yes

- Soil bearing is checked at service level (ASD) and includes the footing's own weight; shear, moment and crushing at strength level (LRFD), ACI 318-14, loads combined to ASCE 7-16.
- Wood on the concrete: the wood's own bearing -- a sill or plate in Fc-perp, a post's end grain in Fc -- can govern below the concrete value; it is not checked on this sheet.

Applied Loads	Location	Trib. Width	Dead	Floor Live	Roof Live	Comments
1 - Point (lb)	--	N/A	983.7	1,204	657.3	Linked from: Header #25, Support 2

SpotFtg Hdr #26-1

PASSED

Spot Footing 1' 4" x 2' x 10" deep -- Unreinforced (Plain)

Controls: Soil Bearing Pressure 48% used
Adequacy 52% (capacity to spare)

Level: Basement | f'c 3,000 psi | soil 1,500 psf | in a foundation wall (10" x 24" stem, typed) | on it: Header #26 on (1) trimmer | ACI 318-14

WHAT LOADS IT

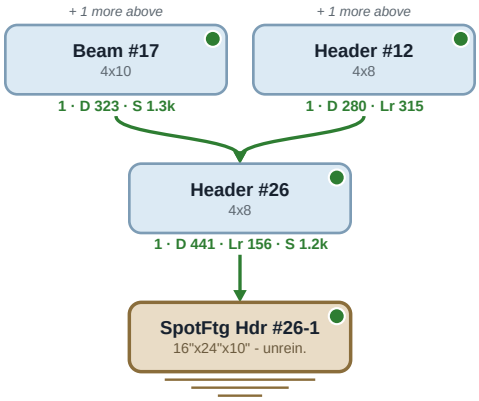

ELEVATION IN THE FOUNDATION WALL

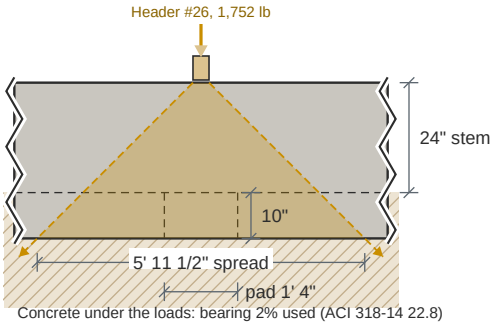

PLAN -- PLAIN CONCRETE, NO REINFORCING

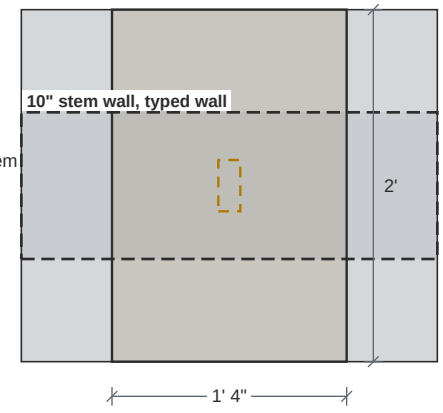

Unreinforced (Plain)

Carrying: Dead 441 lb Floor Live 0 lb Roof Live 156 lb Snow 1,155 lb

Design Results	Actual	Allowed	Result	Method	Load Combination
Soil Bearing Pressure (psf)	719	1,500	Passed (48% used)	ASD	D+S
One-Way Shear X (lbs)	223	5,609	Passed (4% used)	LRFD	1.2D+1.6S+L
Two-Way Shear (lbs)	1,701	27,342	Passed (6% used)	LRFD	1.2D+1.6S+L
Moment X (ft-lbs)	511	2,337	Passed (22% used)	LRFD	1.2D+1.6S+L
Moment Y (ft-lbs)	360	3,505	Passed (10% used)	LRFD	1.2D+1.6S+L
Crushing (lbs)	2,377	16,065	Passed (15% used)	LRFD	1.2D+1.6S+L
Minimum Thickness (in)	10"	8" min	Meets the minimum	code	ACI 318-14 Ch. 14

Footing Specification

as entered on the footing, and the mat the check selected

Geometry	
Shape	Rectangular
Bears on it	Header #26 on (1) trimmer
Bearing size	1 1/2" x 3 1/2"
Footing width	1' 4"
Footing length	2'
Footing depth	10"

Footing Properties	
Concrete strength	3,000 psi
Soil bearing pressure	1,500 psf
Concrete density	145 pcf

Soil Properties	
Soil depth above footing	0

Reinforcement	
Reinforcing	none -- plain concrete
Plain concrete (no reinforcing)	Yes

- Soil bearing is checked at service level (ASD) and includes the footing's own weight; shear, moment and crushing at strength level (LRFD), ACI 318-14, loads combined to ASCE 7-16.
- Which way round the bearing sits on the pad is not known: it is checked both ways and the worse is shown.
- Wood on the concrete: the wood's own bearing -- a sill or plate in Fc-perp, a post's end grain in Fc -- can govern below the concrete value; it is not checked on this sheet.

Applied Loads	Location	Trib. Width	Dead	Floor Live	Roof Live	Snow	Comments
1 - Point (lb)	--	N/A	440.7	0	156.3	1,155	Linked from: Header #26, Support 1

SpotFtg Hdr #26-2

PASSED

Spot Footing 1' 4" x 2' x 10" deep -- Unreinforced (Plain)

Controls: Soil Bearing Pressure 17% used
Adequacy 83.5% (capacity to spare)

Level: Basement | f'c 3,000 psi | soil 1,500 psf | in a foundation wall (6" x 24" stem, Footing #11) | on it: Header #26 on (1) trimmer | ACI 318-14

WHAT LOADS IT

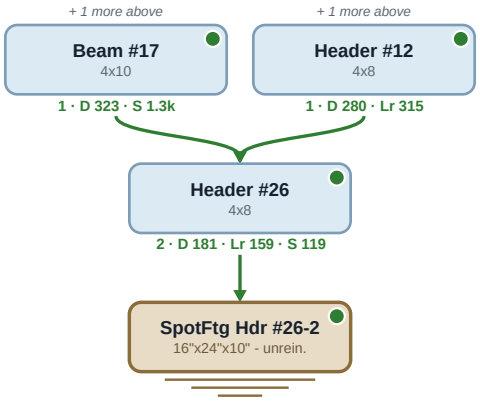

ELEVATION IN THE FOUNDATION WALL

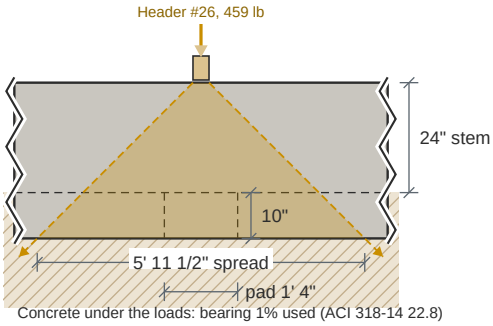

PLAN -- PLAIN CONCRETE, NO REINFORCING

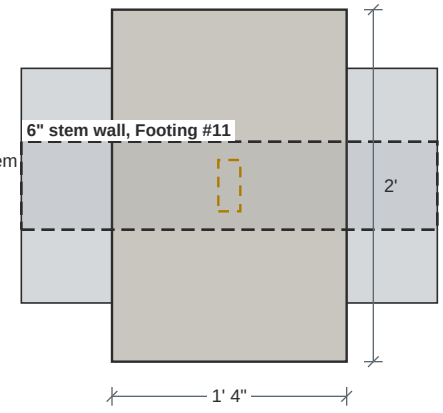

Unreinforced (Plain)

Carrying: Dead 181 lb Roof Live 159 lb Snow 119 lb Floor Live 0 lb

Design Results	Actual	Allowed	Result	Method	Load Combination
Soil Bearing Pressure (psf)	248	1,500	Passed (17% used)	ASD	D+Lr
One-Way Shear X (lbs)	44	5,609	Passed (1% used)	LRFD	1.2D+1.6Lr+L
Two-Way Shear (lbs)	337	27,342	Passed (1% used)	LRFD	1.2D+1.6Lr+L
Moment X (ft-lbs)	101	2,337	Passed (4% used)	LRFD	1.2D+1.6Lr+L
Moment Y (ft-lbs)	71	3,505	Passed (2% used)	LRFD	1.2D+1.6Lr+L
Crushing (lbs)	471	16,065	Passed (3% used)	LRFD	1.2D+1.6Lr+L
Minimum Thickness (in)	10"	8" min	Meets the minimum	code	ACI 318-14 Ch. 14

Footing Specification

as entered on the footing, and the mat the check selected

Geometry	
Shape	Rectangular
Bears on it	Header #26 on (1) trimmer
Bearing size	1 1/2" x 3 1/2"
Footing width	1' 4"
Footing length	2'
Footing depth	10"

Footing Properties	
Concrete strength	3,000 psi
Soil bearing pressure	1,500 psf
Concrete density	145 pcf

Soil Properties	
Soil depth above footing	0

Reinforcement	
Reinforcing	none -- plain concrete
Plain concrete (no reinforcing)	Yes

- Soil bearing is checked at service level (ASD) and includes the footing's own weight; shear, moment and crushing at strength level (LRFD), ACI 318-14, loads combined to ASCE 7-16.
- Which way round the bearing sits on the pad is not known: it is checked both ways and the worse is shown.
- Wood on the concrete: the wood's own bearing -- a sill or plate in Fc-perp, a post's end grain in Fc -- can govern below the concrete value; it is not checked on this sheet.

Applied Loads	Location	Trib. Width	Dead	Floor Live	Roof Live	Snow	Comments
1 - Point (lb)	--	N/A	180.6	0.1	159.1	119	Linked from: Header #26, Support 2

Hangers for every member end set flush in a hanger, or hung from a foundation wall's mud sill; a cap and a base for every post -- from Simpson Strong-Tie's Wood Construction Connectors catalog C-C-2026. Each is checked at every ASD load combination against the catalog's allowable load for that load duration (hangers: floor 100, snow 115, roof 125; caps and bases: as printed, no increase; uplift 160, reduced where gravity governs), for the lower specific gravity of the members. Use = the governing demand over that allowable. Fabricated: nothing in the catalog carries it (or chosen so); it is designed here as a steel plate hanger -- face plate, seat, side plates, fasteners and welds to the 2018 NDS and AISC 360-16, for its reactions and the ASCE 7 1.4.4 tie -- and listed under Fasteners, Use being the governing check; where it can't be, design it to the load shown. Each fabricated hanger's design sheet follows this schedule; one locked as drawn is checked as built. A ledger's fastening to what it hangs on is designed to the 2018 NDS -- the 12.3 yield model, across any sheathing gap per AWC TR12, and the 11.3 factors -- its spacing for the load per foot its joists put on it; listed under Ledgers.

13 hung ends: 13 Simpson, 0 fabricated.

Member	End	Hanger	Hangs on	Design load (ASD)	Use	Fasteners
Beam #12	1	HUC410 face mount, concealed flanges, p. 160 (first that works)	Beam #10, 5 1/2 x 12 glulam	1,982 lb D+Lr	78%	(14) 0.162 x 3 1/2 into the carrying face + (6) 0.148 x 3 into the joist
Beam #12	2	HUC410 face mount, concealed flanges, p. 160	Beam #11, 5 1/2 x 12 glulam	1,891 lb D+Lr	75%	(14) 0.162 x 3 1/2 into the carrying face + (6) 0.148 x 3 into the joist
Beam #14	1	MGU5.62-SDS face mount, order H 12, p. 163 (first that works)	Beam #11, 5 1/2 x 12 glulam	6,782 lb D+S	72%	(24) 1/4 x 2 1/2 SDS into the carrying face + (16) 1/4 x 2 1/2 SDS into the joist
Beam #19	1	HU414 face mount, p. 117 (first that works)	Beam #20, 2-ply 1 3/4 x 18 LVL	2,559 lb D+L	95%	(18) 0.162 x 3 1/2 into the header + (8) 0.148 x 3 into the joist
Beam #19	2	HU414 face mount, p. 117 (first that works)	Beam #21, 2-ply 1 3/4 x 18 LVL	2,559 lb D+L	95%	(18) 0.162 x 3 1/2 into the header + (8) 0.148 x 3 into the joist
Deck Joists #11	1	PF28B top flange, p. 147 (first that works)	LEDGER Deck Joists #11-1, 2x8 HF No. 2 ledger (not set: assumed)	312 lb D+S	29%	(2) 0.148 x 1 1/2 into the top + (4) 0.148 x 1 1/2 into the carrying face + (6) 0.148 x 1 1/2 into the joist
Deck Joists #12	1	PF28B top flange, p. 147 (first that works)	LEDGER Deck Joists #12-1, 2x8 SP No. 2 ledger	413 lb D+S	31%	(2) 0.148 x 1 1/2 into the top + (4) 0.148 x 1 1/2 into the carrying face + (6) 0.148 x 1 1/2 into the joist
Deck Joists #13	1	PF28B top flange, p. 147 (first that works)	LEDGER Deck Joists #13-1, 2x8 SP No. 2 ledger	413 lb D+S	31%	(2) 0.148 x 1 1/2 into the top + (4) 0.148 x 1 1/2 into the carrying face + (6) 0.148 x 1 1/2 into the joist
Rafters #1	3	LRU26Z rafter hanger, sloped 9.5° down in the field, p. 126 (first that works)	LEDGER Rafters #1-3, 2x8 SP No. 2 ledger	146 lb D+Lr	18%	(4) 0.148 x 1 1/2 into the carrying face + (5) 0.148 x 3 into the joist -- the 1 1/2" member: 0.148 x 1 1/2 nails into it in place of the 0.148 x 3, 0.81 of the table (p. 126)
Rafters #2	3	LRU26Z rafter hanger, sloped 9.5° down in the field, p. 126 (first that works)	LEDGER Rafters #2-3, 2x8 SP No. 2 ledger	67 lb D+Lr	8%	(4) 0.148 x 1 1/2 into the carrying face + (5) 0.148 x 3 into the joist -- the 1 1/2" member: 0.148 x 1 1/2 nails into it in place of the 0.148 x 3, 0.81 of the table (p. 126)
Rafters #3	3	LRU26Z rafter hanger, sloped 9.5° down in the field, p. 126 (first that works)	LEDGER Rafters #3-3, 2x10 SP No. 2 ledger	371 lb D+Lr	46%	(4) 0.148 x 1 1/2 into the carrying face + (5) 0.148 x 3 into the joist -- the 1 1/2" member: 0.148 x 1 1/2 nails into it in place of the 0.148 x 3, 0.81 of the table (p. 126)
Rafters #4	3	LRU26Z rafter hanger, sloped 9.5° down in the field, p. 126 (first that works)	LEDGER Rafters #4-3, 2x10 HF No. 2 ledger (not set: assumed)	173 lb D+Lr	25%	(4) 0.148 x 1 1/2 into the carrying face + (5) 0.148 x 3 into the joist -- the 1 1/2" member: 0.148 x 1 1/2 nails into it in place of the 0.148 x 3, 0.81 of the table (p. 126)
Rafters #8	1	LRU28Z rafter hanger, sloped 4.8° down in the field, p. 126 (first that works)	LEDGER Rafters #8-1, 2x12 SP No. 2 ledger	455 lb D+Lr	54%	(6) 0.148 x 1 1/2 into the carrying face + (5) 0.148 x 3 into the joist -- the 1 1/2" member: 0.148 x 1 1/2 nails into it in place of the 0.148 x 3, 0.81 of the table (p. 126)

Ledgers -- each one's fastening to what it hangs on

Member	End	Ledger	Fastened to	Fastening	Use
Deck Joists #11	1	LEDGER Deck Joists #11-1: 2x8 HF No. 2 ledger (not set: assumed)	2x6 DF-L studs at 16 in.	(3) 1/2 x 4-1/2 lags at each stud (16 in. o.c.)	90%
Deck Joists #12	1	LEDGER Deck Joists #12-1: 2x8 SP No. 2 ledger	2x6 DF-L studs at 16 in.	(3) 1/2 x 4-1/2 lags at each stud (16 in. o.c.)	96%
Deck Joists #13	1	LEDGER Deck Joists #13-1: 2x8 SP No. 2 ledger	a 2x SPF rim board (not set: assumed)	5/8 through-bolts, 2 rows staggered @ 11 in. o.c.	94%
Rafters #1	3	LEDGER Rafters #1-3: 2x8 SP No. 2 ledger	a 2x SPF rim board (not set: assumed)	3/8 x 4 lags, 2 rows staggered @ 24 in. o.c.	72%

Hangers (continued)

Member	End	Ledger	Fastened to	Fastening	Use
Rafters #2	3	LEDGER Rafters #2-3: 2x8 SP No. 2 ledger	2x6 DF-L studs at 16 in.	(2) 1/2 x 4-1/2 lags at each stud (16 in. o.c.)	10%
Rafters #3	3	LEDGER Rafters #3-3: 2x10 SP No. 2 ledger	2x6 DF-L studs at 16 in.	(2) 1/2 x 4-1/2 lags at each stud (16 in. o.c.)	55%
Rafters #4	3	LEDGER Rafters #4-3: 2x10 HF No. 2 ledger (not set: assumed)	2x6 SP studs at 16 in.	(2) 1/2 x 4-1/2 lags at each stud (16 in. o.c.)	31%
Rafters #8	1	LEDGER Rafters #8-1: 2x12 SP No. 2 ledger	2x6 DF-L studs at 16 in.	(2) 1/2 x 4-1/2 lags at each stud (16 in. o.c.)	67%

12 posts, 7 of them assumed 6x6. A post is a spot footing with beams on it, or a column; its size is the job's, else the pad's column, else an assumed 6x6 (the pad's column never set).

Post	Size	On it	Cap	Base	Design load (ASD)
SpotFtg Bm #3-1	8x8 post	Beam #3 1	(1) HL55, p. 315	Fabricated	2,715 lb D+Lr
SpotFtg Bm #3-2	8x8 post	Beam #3 2, Beam #4 1	(2) HL55, p. 315	Fabricated	4,449 lb D+Lr
SpotFtg Bm #4-2	8x8 post	Beam #4 2, Beam #5 1	(2) HL55, p. 315	Fabricated	4,145 lb D+Lr
SpotFtg Bm #5-2	8x8 post	Beam #5 2, Beam #6 1, Beam #9 1	(2) HL55, p. 315	Fabricated	8,375 lb D+Lr
SpotFtg Bm #10-2	6x6 post (assumed)	Beam #10 2	TimberLOK 15" + (1) HL55, p. 315	Fabricated	5,201 lb D+0.75L+0.75Lr
SpotFtg Bm #11-2	8x8 post	Beam #11 2	TimberLOK 15" + (1) HL55, p. 315	Fabricated	9,515 lb D+S
SpotFtg Bm #15-1	6x6 post (assumed)	Beam #15 1	(1) HL55, p. 315	Fabricated	3,219 lb D+S
SpotFtg Bm #15-2	6x6 post (assumed)	Beam #15 2, Beam #16 1	(2) HL55, p. 315	Fabricated	6,094 lb D+S
SpotFtg Bm #16-2	6x6 post (assumed)	Beam #16 2	(1) HL55, p. 315	Fabricated	2,875 lb D+S
SpotFtg Bm #17-2	6x6 post (assumed)	Beam #17 2, Beam #18 1	TimberLOK 15" + (2) HL33, p. 315	Fabricated	2,796 lb D+S
SpotFtg Bm #18-2	6x6 post (assumed)	Beam #18 2	TimberLOK 15" + (2) HL33, p. 315	Fabricated	3,995 lb D+S
SpotFtg Bm #18-3	6x6 post (assumed)	Beam #18 3	TimberLOK 15" + (1) HL33, p. 315	Fabricated	1,198 lb D+S

Simpson hardware

Every Simpson Strong-Tie part the job uses, by model: how many, where each goes, its fasteners and its worst use. The catalog page each is on is printed at the back of this package; a model named anywhere in the package links to its page.

Hangers -- 6 models, 13 pieces

Model	Qty	Where	Fasteners	Use	Catalog
HU414	2	Beam #19 1 on Beam #20; Beam #19 2 on Beam #21	(18) 0.162 x 3 1/2 into the header + (8) 0.148 x 3 into the joist	95% used	p. 117
HUC410	2	Beam #12 1 on Beam #10; Beam #12 2 on Beam #11	(14) 0.162 x 3 1/2 into the carrying face + (6) 0.148 x 3 into the joist	78% used	p. 160
LRU26Z	4	Rafters #1 3 on ledger; Rafters #2 3 on ledger; Rafters #3 3 on ledger; Rafters #4 3 on ledger	(4) 0.148 x 1 1/2 into the carrying face + (5) 0.148 x 3 into the joist	46% used	p. 126
LRU28Z	1	Rafters #8 1 on ledger	(6) 0.148 x 1 1/2 into the carrying face + (5) 0.148 x 3 into the joist	54% used	p. 126
MGU5.62-SDS	1	Beam #14 1 on Beam #11	(24) 1/4 x 2 1/2 SDS into the carrying face + (16) 1/4 x 2 1/2 SDS into the joist	72% used	p. 163
PF28B	3	Deck Joists #11 1 on ledger; Deck Joists #12 1 on ledger; Deck Joists #13 1 on ledger	(2) 0.148 x 1 1/2 into the top + (4) 0.148 x 1 1/2 into the carrying face + (6) 0.148 x 1 1/2 into the joist	31% used	p. 147

Post caps -- 4 models, 16 pieces

Model	Qty	Where	Fasteners	Use	Catalog
HL55	11	SpotFtg Bm #3-1 (Beam #3 1); SpotFtg Bm #3-2 (Beam #3 2, Beam #4 1); SpotFtg Bm #4-2 (Beam #4 2, Beam #5 1); SpotFtg Bm #5-2 (Beam #5 2, Beam #6 1, Beam #9 1); SpotFtg Bm #15-1 (Beam #15 1); SpotFtg Bm #15-2 (Beam #15 2, Beam #16 1); SpotFtg Bm #16-2 (Beam #16 2)	(8) 1/2 in bolts each into the angles	--	p. 315
TimberLOK 15" + (1) HL33	1	SpotFtg Bm #18-3 (Beam #18 3)	(2) 1/2 in bolts each into the angles	--	p. 315

Simpson hardware (continued)

Model	Qty	Where	Fasteners	Use	Catalog
TimberLOK 15" + (1) HL55	2	SpotFtg Bm #10-2 (Beam #10 2); SpotFtg Bm #11-2 (Beam #11 2)	(8) 1/2 in bolts each into the angles	--	p. 315
TimberLOK 15" + (2) HL33	2	SpotFtg Bm #17-2 (Beam #17 2, Beam #18 1); SpotFtg Bm #18-2 (Beam #18 2)	(2) 1/2 in bolts each into the angles	--	p. 315

Post bases -- 0 models, 12 pieces

Model	Qty	Where	Fasteners	Use	Catalog
Fabricated (design to the load in the schedule)	12	SpotFtg Bm #3-1 (Beam #3 1); SpotFtg Bm #3-2 (Beam #3 2, Beam #4 1); SpotFtg Bm #4-2 (Beam #4 2, Beam #5 1); SpotFtg Bm #5-2 (Beam #5 2, Beam #6 1, Beam #9 1); SpotFtg Bm #10-2 (Beam #10 2); SpotFtg Bm #11-2 (Beam #11 2); SpotFtg Bm #15-1 (Beam #15 1); SpotFtg Bm #15-2 (Beam #15 2, Beam #16 1); SpotFtg Bm #16-2 (Beam #16 2); SpotFtg Bm #17-2 (Beam #17 2, Beam #18 1); SpotFtg Bm #18-2 (Beam #18 2); SpotFtg Bm #18-3 (Beam #18 3)		--	--

Rafter seats and ties -- 1 model, one at each rafter

Model	Qty	Where	Fasteners	Use	Catalog
H2.5A	each	Rafters #1 2 (each rafter); Rafters #2 2 (each rafter); Rafters #3 2 (each rafter); Rafters #4 2 (each rafter); Rafters #8 2 (each rafter)	(5) 0.131 x 2 1/2 to the rafter, (5) 0.131 x 2 1/2 to the plates	--	p. 300

LEDGER Deck Joists #11-1

Deck Joists #11 hangs on it at support 1, in a PF28B top flange, 71%.
The 2x8 HF No. 2 ledger (not set: assumed) is fastened to 2x6 DF-L studs at 16 in., 1/2" sheathing between, wet service.
Its joists at 16" o.c. load it along its length: each one's reaction x 12 / 16 per foot of ledger.

Fastening: (3) 1/2 x 4-1/2 lags at each stud (16 in. o.c.) -- 10% to spare (90% used, D+S); picked automatically

SECTION 1 in. = 10.8 pt, true scale

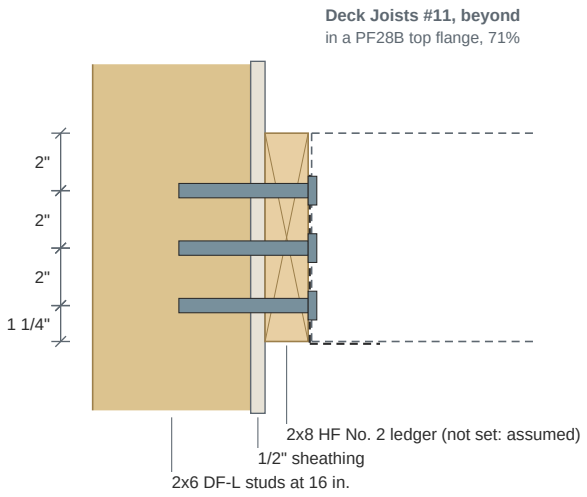

FACE OF THE LEDGER 1 in. = 5.6 pt, true scale

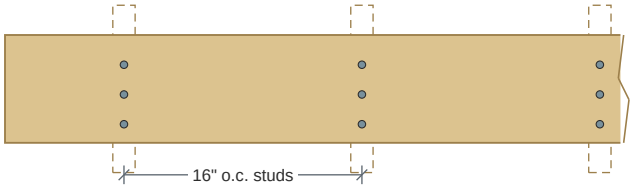

The load on the ledger, each ASD combination

Combination	Load, lb/ft of ledger	C_D
D	44	0.9
D+L	44	1
D+S	234	1.15
D+Lr	44	1.25
D+0.75L+0.75S	186	1.15
D+0.75L+0.75Lr	44	1.25

Each fastener -- the NDS 12.3 yield model, across the sheathing gap per AWC TR12

1/2" x 4-1/2" lag screw: Z = 147 lb, yield mode IIIs (one hinge in the fastener, side member crushing). The ledger (side member): G = 0.43, bearing length 1 1/2", Fes = 2,537 psi. What it hangs on (main member): G = 0.5, bearing length 2 3/8", Fem = 5,600 psi, penetration 2 1/2". Gap g = 1/2".

Checks

Check	Reference	Demand	Capacity	Used	Combination
Each stud's line of (3) 1/2" x 4-1/2" lag screws, lateral	NDS 12.3, 11.3 (Cg 0.972)	312 lb	346 lb	90%	D+S
The ledger's shear at its fasteners	NDS 3.4.3.3	104 lb	376 lb	28%	D+S (de = 2-1/4 in.)
The ledger's bending between fasteners	NDS 3.3	1,247 in-lb	15,414 in-lb	8%	D+S

Requirements

Requirement	Provided	Required	Reference	
Lag screw thread in the studs, less its tip	2 3/16"	2"	NDS 12.1.4.6	OK
Edge distance in the stud (each side)	3/4"	3/4"	NDS Table 12.5.1C (parallel to grain)	OK
Spacing up the stud	2"	2"	NDS Table 12.5.1B (parallel to grain)	OK
A deck ledger: at least a 2x8, as deep as the joists	7 1/4"	7 1/4"	IRC R507.9.1.1	OK

IRC Table R507.9.1.3(1) would give 23 in. o.c. at a 6'1" to 8' joist span, but it isn't this deck: the table is for a 2x solid-sawn band joist; its loads (dead 12 psf, snow 60 psf) are past the table's 40 psf live, 10 psf dead, 40 psf snow.

Tried: (3) 1/2 x 4-1/2 lags at each stud (16 in. o.c.) -- ok.

Tried: (4) 3/8 x 4 lags at each stud (16 in. o.c.) -- fails (Each stud's line of (4) 3/8" x 4" lag screws, lateral: 312 lb on a 259 lb capacity at D+S).

Tried: (3) No. 14 x 3-1/2 screws at each stud (16 in. o.c.) -- fails (Each stud's line of (3) No. 14 x 3-1/2" wood screws, lateral: 312 lb on a 220 lb capacity at D+S).

Tried: (4) 16d common nails at each stud (16 in. o.c.) -- fails (Each stud's line of (4) 16d common nails, lateral: 312 lb on a 246 lb capacity at D+S).

Note: Length: 4-1/2 in., the shortest that develops the full value (147 lb; the longest that fits gives 147 lb) -- a longer one only goes deeper into the studs.

LEDGER Deck Joists #11-1 (continued)

Not checked here: The deck's lateral load connection (IRC R507.9.2: hold-downs at the ledger).

LEDGER Deck Joists #12-1

Deck Joists #12 hangs on it at support 1, in a PF28B top flange, 69%.
The 2x8 SP No. 2 ledger is fastened to 2x6 DF-L studs at 16 in., 1/2" sheathing between, wet service.
Its joists at 16" o.c. load it along its length: each one's reaction x 12 / 16 per foot of ledger.

Fastening: (3) 1/2 x 4-1/2 lags at each stud (16 in. o.c.) -- 4% to spare (96% used, D+S); picked automatically

SECTION 1 in. = 10.8 pt, true scale

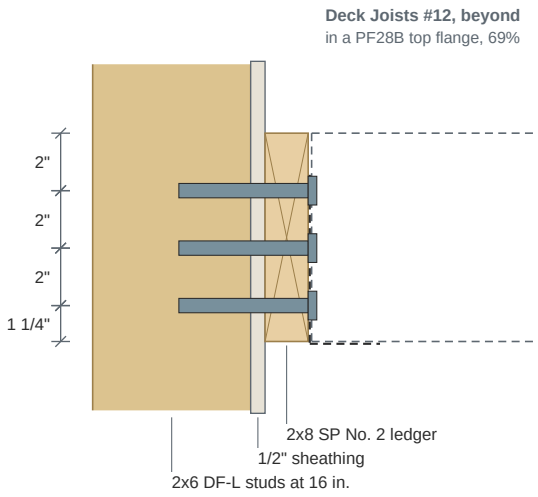

FACE OF THE LEDGER 1 in. = 5.6 pt, true scale

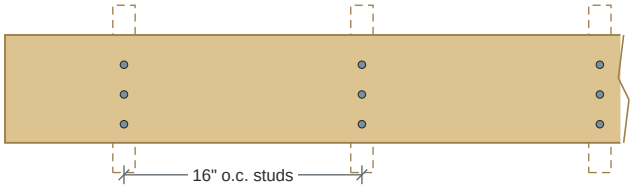

The load on the ledger, each ASD combination

Combination	Load, lb/ft of ledger	C_D
D	58	0.9
D+L	58	1
D+S	310	1.15
D+Lr	58	1.25
D+0.75L+0.75S	247	1.15
D+0.75L+0.75Lr	58	1.25

Each fastener -- the NDS 12.3 yield model, across the sheathing gap per AWC TR12

1/2" x 4-1/2" lag screw: Z = 182 lb, yield mode IIIs (one hinge in the fastener, side member crushing). The ledger (side member): G = 0.55, bearing length 1 1/2", Fes = 3,626 psi. What it hangs on (main member): G = 0.5, bearing length 2 3/8", Fem = 5,600 psi, penetration 2 1/2". Gap g = 1/2".

Checks

Check	Reference	Demand	Capacity	Used	Combination
Each stud's line of (3) 1/2" x 4-1/2" lag screws, lateral	NDS 12.3, 11.3 (Cg 0.972)	413 lb	428 lb	96%	D+S
The ledger's shear at its fasteners	NDS 3.4.3.3	138 lb	439 lb	31%	D+S (de = 2-1/4 in.)
The ledger's bending between fasteners	NDS 3.3	1,651 in-lb	13,978 in-lb	12%	D+S

Requirements

Requirement	Provided	Required	Reference	
Lag screw thread in the studs, less its tip	2 3/16"	2"	NDS 12.1.4.6	OK
Edge distance in the stud (each side)	3/4"	3/4"	NDS Table 12.5.1C (parallel to grain)	OK
Spacing up the stud	2"	2"	NDS Table 12.5.1B (parallel to grain)	OK
A deck ledger: at least a 2x8, as deep as the joists	7 1/4"	7 1/4"	IRC R507.9.1.1	OK

IRC Table R507.9.1.3(1) would give 18 in. o.c. at a 8'1" to 10' joist span, but it isn't this deck: the table is for a 2x solid-sawn band joist; its loads (dead 12 psf, snow 60 psf) are past the table's 40 psf live, 10 psf dead, 40 psf snow.

Tried: (3) 1/2 x 4-1/2 lags at each stud (16 in. o.c.) -- ok.

Tried: (4) 3/8 x 4 lags at each stud (16 in. o.c.) -- fails (Each stud's line of (4) 3/8" x 4" lag screws, lateral: 413 lb on a 275 lb capacity at D+S).

Tried: (3) No. 14 x 3-1/2 screws at each stud (16 in. o.c.) -- fails (Each stud's line of (3) No. 14 x 3-1/2" wood screws, lateral: 413 lb on a 233 lb capacity at D+S).

Tried: (4) 16d common nails at each stud (16 in. o.c.) -- fails (Each stud's line of (4) 16d common nails, lateral: 413 lb on a 260 lb capacity at D+S).

Note: Length: 4-1/2 in., the shortest that develops the full value (182 lb; the longest that fits gives 182 lb) -- a longer one only goes deeper into the studs.

LEDGER Deck Joists #12-1 (continued)

Not checked here: The deck's lateral load connection (IRC R507.9.2: hold-downs at the ledger).

LEDGER Deck Joists #13-1

Deck Joists #13 hangs on it at support 1, in a PF28B top flange, 69%.
The 2x8 SP No. 2 ledger is fastened to a 2x SPF rim board (not set: assumed), 1/2" sheathing between, wet service.
Its joists at 16" o.c. load it along its length: each one's reaction x 12 / 16 per foot of ledger.

Fastening: 5/8 through-bolts, 2 rows staggered @ 11 in. o.c. -- 6% to spare (94% used, D+S); picked automatically

SECTION 1 in. = 14 pt, true scale

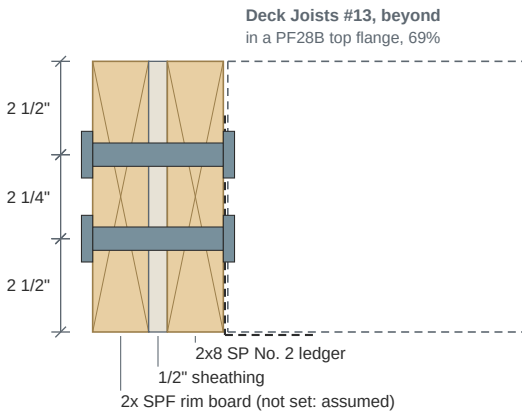

FACE OF THE LEDGER 1 in. = 4.9 pt, true scale

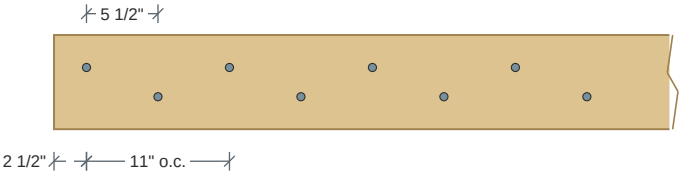

The load on the ledger, each ASD combination

Combination	Load, lb/ft of ledger	C_D
D	58	0.9
D+L	58	1
D+S	310	1.15
D+Lr	58	1.25
D+0.75L+0.75S	247	1.15
D+0.75L+0.75Lr	58	1.25

Each fastener -- the NDS 12.3 yield model, across the sheathing gap per AWC TR12

5/8" bolt: Z = 188 lb, yield mode II (fastener rotation, both members crush); Z' = Z x C_D x C_M x C_t = 151 lb at D+S (C_M 0.7). The ledger (side member): G = 0.55, bearing length 1 1/2", Fes = 3,243 psi. What it hangs on (main member): G = 0.42, bearing length 1 1/2", Fem = 2,193 psi, through. Gap g = 1/2".

Checks

Check	Reference	Demand	Capacity	Used	Combination
Each fastener, lateral (5/8" bolt)	NDS 12.3, 11.3	142 lb	151 lb	94%	D+S
The ledger's shear at its fasteners	NDS 3.4.3.3	142 lb	549 lb	26%	D+S (de = 2-13/16 in.)
The ledger's bending between fasteners	NDS 3.3	568 in-lb	13,978 in-lb	4%	D+S

Requirements

Requirement	Provided	Required	Reference	
Spacing in a row	11"	1 7/8"	NDS Table 12.5.1B	OK
Spacing between the rows	2 1/4"	1 3/4"	NDS Table 12.5.1D	OK
A deck ledger: at least a 2x8, as deep as the joists	7 1/4"	7 1/4"	IRC R507.9.1.1	OK

IRC Table R507.9.1.3(1) would give 34 in. o.c. at a 8'1" to 10' joist span, but it isn't this deck: the table is for 1/2 in. lags and bolts; its loads (dead 12 psf, snow 60 psf) are past the table's 40 psf live, 10 psf dead, 40 psf snow.

Tried: 1/2 x 4 lags, 2 rows staggered @ 7 in. o.c. -- fails (Lag screw thread in the rim board, less its tip: 1-1/2 in., 2 in. needed (NDS 12.1.4.6)).

Tried: 3/8 x 4 lags, 2 rows staggered @ 5 in. o.c. -- ok.

Tried: 1/2 through-bolts, 2 rows staggered @ 10 in. o.c. -- ok.

Tried: 5/8 through-bolts, 2 rows staggered @ 11 in. o.c. -- ok.

Not checked here: The deck's lateral load connection (IRC R507.9.2: hold-downs at the ledger).

LEDGER Rafters #1-3

Rafters #1 hangs on it at support 3, in an LRU26Z rafter hanger, sloped 9.5° down in the field, 82%.
The 2x8 SP No. 2 ledger is fastened to a 2x SPF rim board (not set: assumed), 1/2" sheathing between, dry service.
Its joists at 24" o.c. load it along its length: each one's reaction x 12 / 24 per foot of ledger.

Fastening: 3/8 x 4 lags, 2 rows staggered @ 24 in. o.c. -- 28% to spare (72% used, D+Lr); picked automatically

SECTION 1 in. = 14 pt, true scale

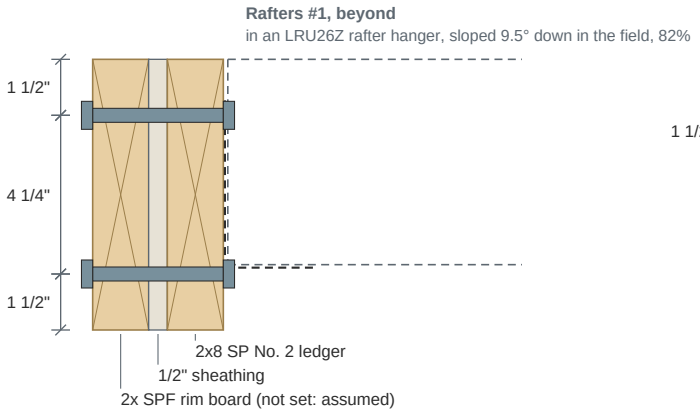

FACE OF THE LEDGER 1 in. = 2.3 pt, true scale

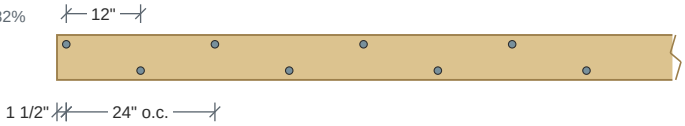

The load on the ledger, each ASD combination

Combination	Load, lb/ft of ledger	C_D
D	35	0.9
D+L	35	1
D+S	35	1.15
D+Lr	73	1.25
D+0.75L+0.75S	35	1.15
D+0.75L+0.75Lr	64	1.25

Each fastener -- the NDS 12.3 yield model, across the sheathing gap per AWC TR12

3/8" x 4" lag screw: Z = 81 lb, yield mode IV (two hinges in the fastener); Z' = Z x C_D x C_M x C_t = 101 lb at D+Lr (C_M 1). The ledger (side member): G = 0.55, bearing length 1 1/2", Fes = 4,186 psi. What it hangs on (main member): G = 0.42, bearing length 1 1/2", Fem = 2,832 psi, through. Gap g = 1/2".

Checks

Check	Reference	Demand	Capacity	Used	Combination
Each fastener, lateral (3/8" x 4" lag screw)	NDS 12.3, 11.3	73 lb	101 lb	72%	D+Lr
The ledger's shear at its fasteners	NDS 3.4.3.3	73 lb	369 lb	20%	D+Lr (de = 1-11/16 in.)
The ledger's bending between fasteners	NDS 3.3	439 in-lb	15,194 in-lb	3%	D+Lr

Requirements

Requirement	Provided	Required	Reference	
Lag screw thread in the rim board, less its tip	1 1/2"	1 1/2"	NDS 12.1.4.6	OK
Spacing in a row	24"	1 1/8"	NDS Table 12.5.1B	OK
Spacing between the rows	4 1/4"	1 3/8"	NDS Table 12.5.1D	OK

Tried: 1/2 x 4 lags, 2 rows staggered @ 24 in. o.c. -- fails (Lag screw thread in the rim board, less its tip: 1-1/2 in., 2 in. needed (NDS 12.1.4.6)).
Tried: 3/8 x 4 lags, 2 rows staggered @ 24 in. o.c. -- ok.
Tried: 1/2 through-bolts, 2 rows staggered @ 24 in. o.c. -- ok.
Tried: 5/8 through-bolts, 2 rows staggered @ 24 in. o.c. -- ok.

LEDGER Rafters #2-3

Rafters #2 hangs on it at support 3, in an LRU26Z rafter hanger, sloped 9.5° down in the field, 92%.
The 2x8 SP No. 2 ledger is fastened to 2x6 DF-L studs at 16 in., 1/2" sheathing between, dry service.
Its joists at 24" o.c. load it along its length: each one's reaction x 12 / 24 per foot of ledger.

Fastening: (2) 1/2 x 4-1/2 lags at each stud (16 in. o.c.) -- 90% to spare (10% used, D+Lr); picked automatically

SECTION 1 in. = 10.8 pt, true scale

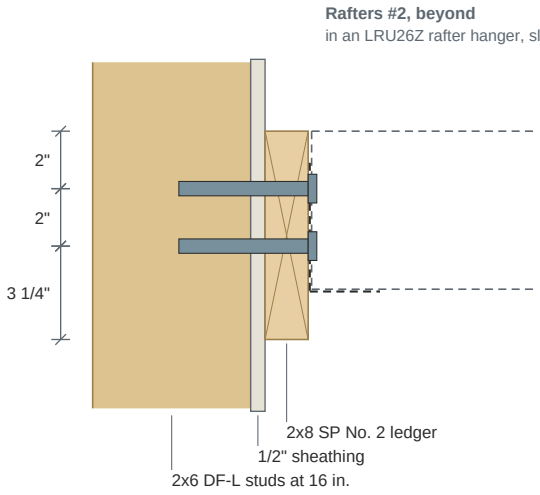

FACE OF THE LEDGER 1 in. = 5.6 pt, true scale

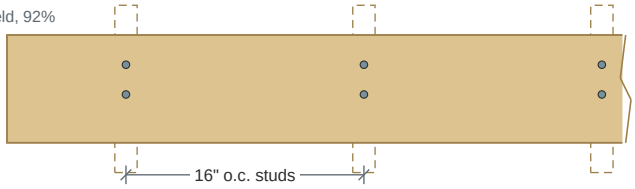

The load on the ledger, each ASD combination

Combination	Load, lb/ft of ledger	C_D
D	16	0.9
D+L	16	1
D+S	16	1.15
D+Lr	33	1.25
D+0.75L+0.75S	16	1.15
D+0.75L+0.75Lr	29	1.25

Each fastener -- the NDS 12.3 yield model, across the sheathing gap per AWC TR12

1/2" x 4-1/2" lag screw: Z = 182 lb, yield mode IIIs (one hinge in the fastener, side member crushing). The ledger (side member): G = 0.55, bearing length 1 1/2", Fes = 3,626 psi. What it hangs on (main member): G = 0.5, bearing length 2 3/8", Fem = 5,600 psi, penetration 2 1/2". Gap g = 1/2".

Checks

Check	Reference	Demand	Capacity	Used	Combination
Each stud's line of (2) 1/2" x 4-1/2" lag screws, lateral	NDS 12.3, 11.3 (Cg 0.992)	45 lb	453 lb	10%	D+Lr
The ledger's shear at its fasteners	NDS 3.4.3.3	22 lb	492 lb	5%	D+Lr (de = 2-1/4 in.)
The ledger's bending between fasteners	NDS 3.3	267 in-lb	15,194 in-lb	2%	D+Lr

Requirements

Requirement	Provided	Required	Reference	
Lag screw thread in the studs, less its tip	2 3/16"	2"	NDS 12.1.4.6	OK
Edge distance in the stud (each side)	3/4"	3/4"	NDS Table 12.5.1C (parallel to grain)	OK
Spacing up the stud	2"	2"	NDS Table 12.5.1B (parallel to grain)	OK

Tried: (2) 1/2 x 4-1/2 lags at each stud (16 in. o.c.) -- ok.
Tried: (2) 3/8 x 4 lags at each stud (16 in. o.c.) -- ok.
Tried: (2) No. 14 x 3-1/2 screws at each stud (16 in. o.c.) -- ok.
Tried: (2) 16d common nails at each stud (16 in. o.c.) -- ok.
Note: Length: 4-1/2 in., the shortest that develops the full value (182 lb; the longest that fits gives 182 lb) -- a longer one only goes deeper into the studs.

LEDGER Rafters #3-3

Rafters #3 hangs on it at support 3, in an LRU26Z rafter hanger, sloped 9.5° down in the field, 54%.
The 2x10 SP No. 2 ledger is fastened to 2x6 DF-L studs at 16 in., 1/2" sheathing between, dry service.
Its joists at 24" o.c. load it along its length: each one's reaction x 12 / 24 per foot of ledger.

Fastening: (2) 1/2 x 4-1/2 lags at each stud (16 in. o.c.) -- 45% to spare (55% used, D+Lr); picked automatically

SECTION 1 in. = 9.3 pt, true scale

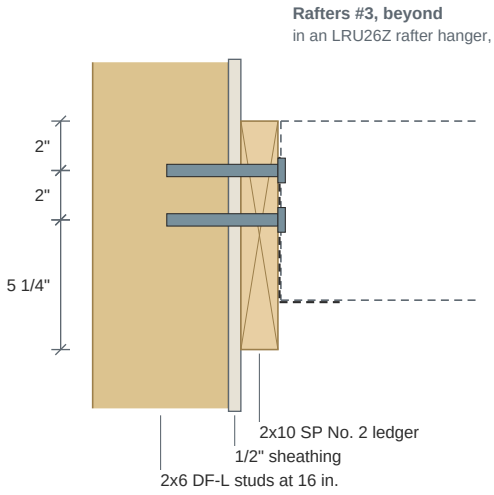

FACE OF THE LEDGER 1 in. = 5.6 pt, true scale

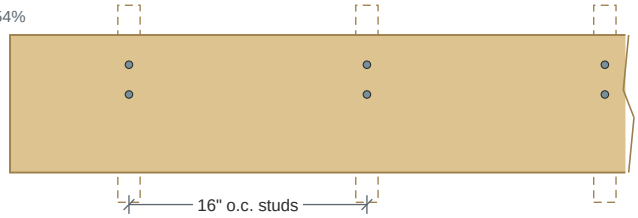

The load on the ledger, each ASD combination

Combination	Load, lb/ft of ledger	C_D
D	89	0.9
D+L	89	1
D+S	89	1.15
D+Lr	186	1.25
D+0.75L+0.75S	89	1.15
D+0.75L+0.75Lr	161	1.25

Each fastener -- the NDS 12.3 yield model, across the sheathing gap per AWC TR12

1/2" x 4-1/2" lag screw: Z = 182 lb, yield mode IIIs (one hinge in the fastener, side member crushing). The ledger (side member): G = 0.55, bearing length 1 1/2", Fes = 3,626 psi. What it hangs on (main member): G = 0.5, bearing length 2 3/8", Fem = 5,600 psi, penetration 2 1/2". Gap g = 1/2".

Checks

Check	Reference	Demand	Capacity	Used	Combination
Each stud's line of (2) 1/2" x 4-1/2" lag screws, lateral	NDS 12.3, 11.3 (Cg 0.992)	247 lb	453 lb	55%	D+Lr
The ledger's shear at its fasteners	NDS 3.4.3.3	124 lb	492 lb	25%	D+Lr (de = 2-1/4 in.)
The ledger's bending between fasteners	NDS 3.3	1,485 in-lb	21,391 in-lb	7%	D+Lr

Requirements

Requirement	Provided	Required	Reference	
Lag screw thread in the studs, less its tip	2 3/16"	2"	NDS 12.1.4.6	OK
Edge distance in the stud (each side)	3/4"	3/4"	NDS Table 12.5.1C (parallel to grain)	OK
Spacing up the stud	2"	2"	NDS Table 12.5.1B (parallel to grain)	OK

Tried: (2) 1/2 x 4-1/2 lags at each stud (16 in. o.c.) -- ok.
Tried: (3) 3/8 x 4 lags at each stud (16 in. o.c.) -- ok.
Tried: (3) No. 14 x 3-1/2 screws at each stud (16 in. o.c.) -- ok.
Tried: (3) 16d common nails at each stud (16 in. o.c.) -- ok.
Note: Length: 4-1/2 in., the shortest that develops the full value (182 lb; the longest that fits gives 182 lb) -- a longer one only goes deeper into the studs.

LEDGER Rafters #4-3

Rafters #4 hangs on it at support 3, in an LRU26Z rafter hanger, sloped 9.5° down in the field, 75%.
The 2x10 HF No. 2 ledger (not set: assumed) is fastened to 2x6 SP studs at 16 in., 1/2" sheathing between, dry service.
Its joists at 24" o.c. load it along its length: each one's reaction x 12 / 24 per foot of ledger.

Fastening: (2) 1/2 x 4-1/2 lags at each stud (16 in. o.c.) -- 69% to spare (31% used, D+Lr); picked automatically

SECTION 1 in. = 9.3 pt, true scale

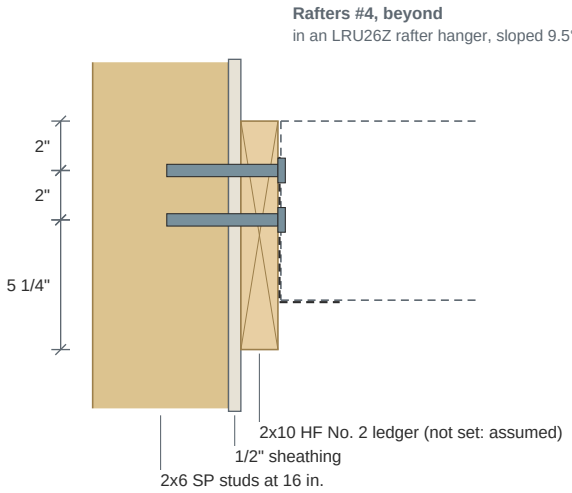

FACE OF THE LEDGER 1 in. = 5.6 pt, true scale

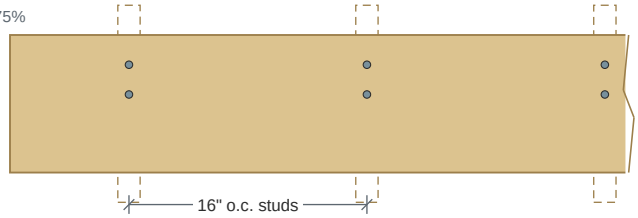

The load on the ledger, each ASD combination

Combination	Load, lb/ft of ledger	C_D
D	42	0.9
D+L	42	1
D+S	42	1.15
D+Lr	87	1.25
D+0.75L+0.75S	42	1.15
D+0.75L+0.75Lr	75	1.25

Each fastener -- the NDS 12.3 yield model, across the sheathing gap per AWC TR12

1/2" x 4-1/2" lag screw: Z = 148 lb, yield mode IIIs (one hinge in the fastener, side member crushing). The ledger (side member): G = 0.43, bearing length 1 1/2", Fes = 2,537 psi. What it hangs on (main member): G = 0.55, bearing length 2 3/8", Fem = 6,160 psi, penetration 2 1/2". Gap g = 1/2".

Checks

Check	Reference	Demand	Capacity	Used	Combination
Each stud's line of (2) 1/2" x 4-1/2" lag screws, lateral	NDS 12.3, 11.3 (Cg 0.992)	115 lb	368 lb	31%	D+Lr
The ledger's shear at its fasteners	NDS 3.4.3.3	58 lb	422 lb	14%	D+Lr (de = 2-1/4 in.)
The ledger's bending between fasteners	NDS 3.3	693 in-lb	25,000 in-lb	3%	D+Lr

Requirements

Requirement	Provided	Required	Reference	
Lag screw thread in the studs, less its tip	2 3/16"	2"	NDS 12.1.4.6	OK
Edge distance in the stud (each side)	3/4"	3/4"	NDS Table 12.5.1C (parallel to grain)	OK
Spacing up the stud	2"	2"	NDS Table 12.5.1B (parallel to grain)	OK

Tried: (2) 1/2 x 4-1/2 lags at each stud (16 in. o.c.) -- ok.
Tried: (2) 3/8 x 4 lags at each stud (16 in. o.c.) -- ok.
Tried: (2) No. 14 x 3-1/2 screws at each stud (16 in. o.c.) -- ok.
Tried: (2) 16d common nails at each stud (16 in. o.c.) -- ok.
Note: Length: 4-1/2 in., the shortest that develops the full value (148 lb; the longest that fits gives 148 lb) -- a longer one only goes deeper into the studs.

LEDGER Rafters #8-1

Rafters #8 hangs on it at support 1, in an LRU28Z rafter hanger, sloped 4.8° down in the field, 46%.
The 2x12 SP No. 2 ledger is fastened to 2x6 DF-L studs at 16 in., 1/2" sheathing between, dry service.
Its joists at 24" o.c. load it along its length: each one's reaction x 12 / 24 per foot of ledger.

Fastening: (2) 1/2 x 4-1/2 lags at each stud (16 in. o.c.) -- 33% to spare (67% used, D+Lr); picked automatically

SECTION 1 in. = 8.1 pt, true scale

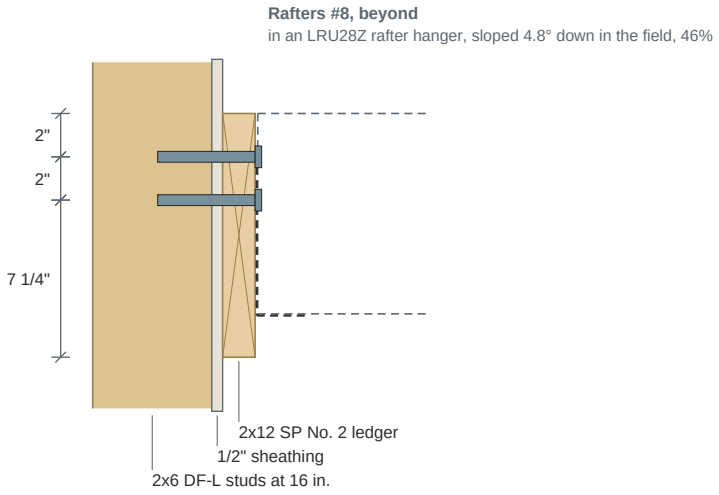

FACE OF THE LEDGER 1 in. = 5.6 pt, true scale

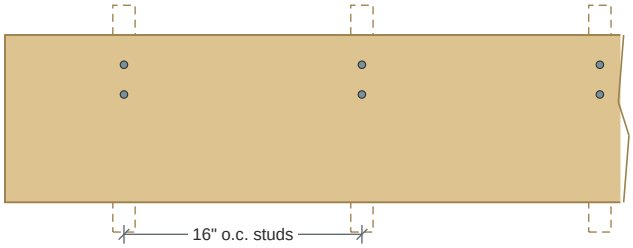

The load on the ledger, each ASD combination

Combination	Load, lb/ft of ledger	C_D
D	110	0.9
D+L	110	1
D+S	110	1.15
D+Lr	228	1.25
D+0.75L+0.75S	110	1.15
D+0.75L+0.75Lr	198	1.25

Each fastener -- the NDS 12.3 yield model, across the sheathing gap per AWC TR12

1/2" x 4-1/2" lag screw: Z = 182 lb, yield mode IIIs (one hinge in the fastener, side member crushing). The ledger (side member): G = 0.55, bearing length 1 1/2", Fes = 3,626 psi. What it hangs on (main member): G = 0.5, bearing length 2 3/8", Fem = 5,600 psi, penetration 2 1/2". Gap g = 1/2".

Checks

Check	Reference	Demand	Capacity	Used	Combination
Each stud's line of (2) 1/2" x 4-1/2" lag screws, lateral	NDS 12.3, 11.3 (Cg 0.992)	303 lb	453 lb	67%	D+Lr
The ledger's shear at its fasteners	NDS 3.4.3.3	152 lb	492 lb	31%	D+Lr (de = 2-1/4 in.)
The ledger's bending between fasteners	NDS 3.3	1,821 in-lb	29,663 in-lb	6%	D+Lr

Requirements

Requirement	Provided	Required	Reference	
Lag screw thread in the studs, less its tip	2 3/16"	2"	NDS 12.1.4.6	OK
Edge distance in the stud (each side)	3/4"	3/4"	NDS Table 12.5.1C (parallel to grain)	OK
Spacing up the stud	2"	2"	NDS Table 12.5.1B (parallel to grain)	OK

Tried: (2) 1/2 x 4-1/2 lags at each stud (16 in. o.c.) -- ok.
Tried: (3) 3/8 x 4 lags at each stud (16 in. o.c.) -- ok.
Tried: (3) No. 14 x 3-1/2 screws at each stud (16 in. o.c.) -- ok.
Tried: (4) 16d common nails at each stud (16 in. o.c.) -- ok.
Note: Length: 4-1/2 in., the shortest that develops the full value (182 lb; the longest that fits gives 182 lb) -- a longer one only goes deeper into the studs.

Simpson Strong-Tie® Wood Construction Connectors

Face-Mount Hangers — Solid Sawn Lumber (DF/SP)

These products are available with additional corrosion protection. For more information, see pp. 13–19.

SS For stainless-steel fasteners, see p. 25.

SD Many of these products are approved for installation with Strong-Drive® SD Connector screws. See pp. 380–382 for more information.

Joist Size	Model No.	Ga.	Dimensions (in.) W	H	B	Min./ Max.	Fasteners (in.) Header	Joist	DF/SP Allowable Loads (lb.) Uplift (160)	Floor (100)	Snow (115)	Roof (125)	Installed Cost Index (ICI)	Code Ref.
Sawn Lumber Sizes														
	U314	16	2⁹⁄₁₆	10½	2	—	(16) 0.162 x 3½	(6) 0.148 x 1½	990	2,305	2,610	2,815	*	
3x14	HU314 / HUC314	14	2⁹⁄₁₆	12⁷⁄₁₆	2½	—	(18) 0.162 x 3½	(8) 0.148 x 1½	1,510	2,680	3,025	3,240	*	
SS	HUCQ310-SDS	14	2⁹⁄₁₆	9	3	—	(8) ¼ x 2½ SDS	(4) ¼ x 2½ SDS	1,350	3,120	3,590	3,860	*	
3x16	U314	16	2⁹⁄₁₆	10½	2	—	(16) 0.162 x 3½	(6) 0.148 x 1½	990	2,305	2,610	2,815	*	
	HU316 / HUC316	14	2⁹⁄₁₆	14³⁄₁₆	2½	—	(20) 0.162 x 3½	(8) 0.148 x 1½	1,510	2,980	3,360	3,600	*	
4x4	LUS44	18	3⁹⁄₁₆	3	2	—	(4) 0.162 x 3½	(2) 0.162 x 3½	410	800	905	980	Lowest	
	U44	16	3⁹⁄₁₆	2⅞	2	—	(4) 0.162 x 3½	(2) 0.148 x 3	240	575	650	705	20%	
	HU44 / HUC44	14	3⁹⁄₁₆	2⅞	2½	—	(4) 0.162 x 3½	(2) 0.148 x 3	380	595	670	720	161%	
4x6	LUS46	18	3⁹⁄₁₆	4¾	2	—	(4) 0.162 x 3½	(4) 0.162 x 3½	1,060	1,030	1,170	1,265	Lowest	
	U46	16	3⁹⁄₁₆	4⅞	2	—	(8) 0.162 x 3½	(4) 0.148 x 3	535	1,150	1,305	1,410	37%	
	HUS46	14	3⁹⁄₁₆	4¹⁵⁄₁₆	2	—	(4) 0.162 x 3½	(4) 0.162 x 3½	1,165	1,090	1,225	1,320	152%	
SS	HU46 / HUC46	14	3⁹⁄₁₆	4¾	2½	Min.	(8) 0.162 x 3½	(4) 0.148 x 3	755	1,190	1,345	1,440	163%	
		14	3⁹⁄₁₆	4¾	2½	Max.	(12) 0.162 x 3½	(6) 0.148 x 3	1,135	1,785	2,015	2,165	185%	
4x8	LUS46	18	3⁹⁄₁₆	4¾	2	—	(4) 0.162 x 3½	(4) 0.162 x 3½	1,060	1,030	1,170	1,265	Lowest	
	U46	16	3⁹⁄₁₆	4⅞	2	—	(8) 0.162 x 3½	(4) 0.148 x 3	535	1,150	1,305	1,410	37%	
	LUS48	18	3⁹⁄₁₆	6¾	2	—	(6) 0.162 x 3½	(4) 0.162 x 3½	1,060	1,315	1,490	1,610	40%	
	HUS48	14	3⁹⁄₁₆	6¹⁵⁄₁₆	2	—	(6) 0.162 x 3½	(6) 0.162 x 3½	1,320	1,630	1,840	1,980	203%	
SS	HU48 / HUC48	14	3⁹⁄₁₆	6⅛	2½	Min.	(10) 0.162 x 3½	(4) 0.148 x 3	755	1,490	1,680	1,800	213%	
		14	3⁹⁄₁₆	6⅛	2½	Max.	(14) 0.162 x 3½	(6) 0.148 x 3	1,135	2,085	2,350	2,530	235%	
4x10	LUS48	18	3⁹⁄₁₆	6¾	2	—	(6) 0.162 x 3½	(4) 0.162 x 3½	1,060	1,315	1,490	1,610	Lowest	
	LUS410	18	3⁹⁄₁₆	8¾	2	—	(8) 0.162 x 3½	(6) 0.162 x 3½	1,445	1,830	2,075	2,245	19%	IBC, FL, LA
	U410	16	3⁹⁄₁₆	8⅜	2	—	(14) 0.162 x 3½	(6) 0.148 x 3	990	2,015	2,280	2,465	74%	
	HUS410	14	3⁹⁄₁₆	8¹⁵⁄₁₆	2	—	(8) 0.162 x 3½	(8) 0.162 x 3½	3,285	2,175	2,455	2,640	154%	
SS	HU410 / HUC410	14	3⁹⁄₁₆	8⅜	2½	Min.	(14) 0.162 x 3½	(6) 0.148 x 3	1,135	2,085	2,350	2,520	232%	
		14	3⁹⁄₁₆	8⅜	2½	Max.	(18) 0.162 x 3½	(10) 0.148 x 3	1,795	2,680	3,020	3,250	253%	
SS	HUCQ410-SDS	14	3⁹⁄₁₆	9	3	—	(12) ¼ x 2½ SDS	(6) ¼ x 2½ SDS	2,265	4,500	4,500	4,500	*	
4x12	LUS410	18	3⁹⁄₁₆	8¾	2	—	(8) 0.162 x 3½	(6) 0.162 x 3½	1,445	1,830	2,075	2,245	Lowest	
	LUS414	18	3⁹⁄₁₆	10¾	2	—	(10) 0.162 x 3½	(6) 0.162 x 3½	1,445	2,110	2,395	2,590	33%	
	U410	16	3⁹⁄₁₆	8⅜	2	—	(14) 0.162 x 3½	(6) 0.148 x 3	990	2,015	2,280	2,465	46%	
	HUS410	14	3⁹⁄₁₆	8¹⁵⁄₁₆	2	—	(8) 0.162 x 3½	(8) 0.162 x 3½	3,220	2,110	2,385	2,575	114%	
	HUS412	14	3⁹⁄₁₆	10¾	2	—	(10) 0.162 x 3½	(10) 0.162 x 3½	3,435	2,720	3,070	3,300	129%	
	HU412 / HUC412	14	3⁹⁄₁₆	10⅜	2½	Min.	(16) 0.162 x 3½	(6) 0.148 x 3	1,135	2,385	2,690	2,880	268%	
		14	3⁹⁄₁₆	10⅜	2½	Max.	(22) 0.162 x 3½	(10) 0.148 x 3	1,795	3,275	3,695	3,970	290%	
SS	HUCQ410-SDS	14	3⁹⁄₁₆	9	3	—	(12) ¼ x 2½ SDS	(6) ¼ x 2½ SDS	2,265	4,500	4,500	4,500	*	
SS	HUCQ412-SDS	14	3⁹⁄₁₆	11	3	—	(14) ¼ x 2½ SDS	(6) ¼ x 2½ SDS	2,265	5,045	5,045	5,045	*	
4x14	LUS410	18	3⁹⁄₁₆	8¾	2	—	(8) 0.162 x 3½	(6) 0.162 x 3½	1,445	1,830	2,075	2,245	Lowest	
	LUS414	18	3⁹⁄₁₆	10¾	2	—	(10) 0.162 x 3½	(6) 0.162 x 3½	1,445	2,110	2,395	2,590	33%	
	U414	16	3⁹⁄₁₆	10	2	—	(16) 0.162 x 3½	(6) 0.148 x 3	990	2,305	2,610	2,815	93%	
	HUS412	14	3⁹⁄₁₆	10¾	2	—	(10) 0.162 x 3½	(10) 0.162 x 3½	3,435	2,720	3,070	3,300	129%	
	HU414 / HUC414	14	3⁹⁄₁₆	11 ¹⁵⁄₁₆	2½	Min.	(18) 0.162 x 3½	(8) 0.148 x 3	1,510	2,680	3,025	3,240	333%	
		14	3⁹⁄₁₆	11 ¹⁵⁄₁₆	2½	Max.	(24) 0.162 x 3½	(12) 0.148 x 3	2,015	3,570	4,030	4,335	355%	
SS	HUCQ412-SDS	14	3⁹⁄₁₆	11	3	—	(14) ¼ x 2½ SDS	(6) ¼ x 2½ SDS	2,265	5,045	5,045	5,045	*	

See footnotes on p. 118.

Codes: See p. 12 for Code Reference Key Chart

C-C-2026 © 2026 SIMPSON STRONG-TIE COMPANY INC.

LRUZ

Face-Mount Rafter Hanger

The LRUZ offers an economic alternative for those applications requiring a sloped hanger for rafter-to-ridge connections. Used with solid sawn rafters, the LRUZ's unique design enables the hanger to be installed either before or after the rafter is in place. The field-adjustable seat helps improve job efficiency by eliminating mismatched angles in the field and lead times associated with special orders. The LRUZ offers comparable or better load capacity to other rafter hangers at a reduced cost while using fewer fasteners.

Features:

- The open design and ability to field-adjust the slope make the LRUZ ideal for both retrofit or new applications.
- May be sloped down from 0° (0:12 pitch) to 49° (14:12). For slopes greater than 45°, allowable downloads are 0.85 of table loads.
- May be sloped up from 0° to 45°.
- For added versatility, the fasteners on the face of the hanger are placed high enabling the bottom of the rafter to hang below the ridge beam (see "Max. C_1" dimension).
- Can be installed using nails or Strong-Drive® SD Connector screws.

Material: 18 gauge

Finish: ZMAX® coating

Installation:

- Use all specified fasteners; see General Notes
- Joist fasteners must be installed at an angle through the rafter or joist into the header to achieve the table loads
- See alternate installation on p. 127 for retrofit applications

Codes: See p. 12 for Code Reference Key Chart

Web Applications: Visit **app.strongtie.com/hs** to access our Hanger Selector web application.

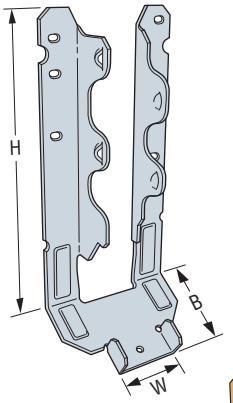

LRU28Z
(other models similar)

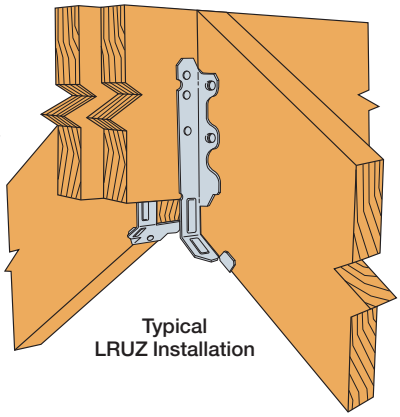

Typical LRUZ Installation



Double-Shear Nailing Top View

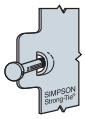

Dome Double-Shear Nailing Side View

These products are available with additional corrosion protection. For more information, see pp. 13–19.

SD Many of these products are approved for installation with Strong-Drive® SD Connector screws. See pp. 380–382 for more information.

Standard Installation

Model No.	Dimensions (in.)				Fasteners (in.)		DF/SP Allowable Loads				SPF/HF Allowable Loads				Code Ref.
	W	H	B	Max. C_1	Face	Joist	Uplift (160)	Floor (100)	Snow (115)	Roof (125)	Uplift (160)	Floor (100)	Snow (115)	Roof (125)	
					(4) 0.162 x 3½	(5) 0.162 x 3½	810	1,030	1,175	1,275	695	885	1,010	1,095	
LRU26Z	1⅜6	5¼	1 15⁄16	1¾	~~(4) 0.148 x 3~~	~~(5) 0.148 x 3~~	~~600~~	~~865~~	~~990~~	~~990~~	~~515~~	~~745~~	~~850~~	~~850~~	
					~~(4) #10 x 2½" SD~~	~~(5) #10 x 2½" SD~~	~~770~~	~~1,215~~	~~1,395~~	~~1,425~~	~~660~~	~~935~~	~~1,075~~	~~1,170~~	
					(4) #10 x 1½" SD	(5) #10 x 2½" SD	770	1,045	1,200	1,305	660	830	950	1,035	
					(6) 0.162 x 3½	(5) 0.162 x 3½	810	1,315	1,340	1,340	695	1,130	1,150	1,150	
LRU28Z	1⅜6	6 15⁄16	1 15⁄16	2⅝	~~(6) 0.148 x 3~~	~~(5) 0.148 x 3~~	~~805~~	~~1,050~~	~~1,050~~	~~1,050~~	~~690~~	~~905~~	~~905~~	~~905~~	
					~~(6) #10 x 2½" SD~~	~~(5) #10 x 2½" SD~~	~~1,025~~	~~1,480~~	~~1,480~~	~~1,480~~	~~880~~	~~1,285~~	~~1,270~~	~~1,270~~	
					(6) #10 x 1½" SD	(5) #10 x 2½" SD	1,025	1,390	1,480	1,480	880	1,105	1,270	1,270	IBC, FL, LA
					(6) 0.162 x 3½	(7) 0.162 x 3½	1,015	1,550	1,620	1,620	875	1,335	1,395	1,395	
LRU210Z	1⅜6	8 3⁄16	1 15⁄16	1¾	(6) 0.148 x 3	(7) 0.148 x 3	1,015	1,295	1,480	1,495	875	1,115	1,275	1,285	
					(6) #10 x 2½" SD	(7) #10 x 2½" SD	1,510	1,805	1,805	1,805	1,300	1,405	1,550	1,550	
					(6) #10 x 1½" SD	(7) #10 x 2½" SD	1,510	1,570	1,805	1,805	1,300	1,240	1,430	1,550	
					(6) 0.162 x 3½	(7) 0.162 x 3½	1,305	1,550	1,765	1,910	1,120	1,335	1,520	1,645	
LRU212Z	1⅜6	10 11⁄16	1 15⁄16	3½	(6) 0.148 x 3	(7) 0.148 x 3	1,305	1,295	1,430	1,430	1120	1,115	1,230	1,230	
					(6) #10 x 2½" SD	(7) #10 x 2½" SD	1,850	1,820	1,915	1,915	1,590	1,405	1,615	1,645	
					(6) #10 x 1½" SD	(7) #10 x 2½" SD	1,850	1,570	1,805	1,915	1,590	1,240	1,430	1,555	

1. Uplift loads have been increased for earthquake or wind loading with no further increase allowed. Reduce where other loads govern.
2. Allowable loads are based on a minimum 3" carrying member. For single 2x carrying members, use 0.148" x 1½" nails in the face and 0.148" x 3" in the joist, and reduce the allowable load to 0.81 of the tabulated value for 0.148" x 3" nails. Alternatively, use #10 x 1½" Strong-Drive SD Connector screws in the face and #10 x 2½" SD Connector screws in the joist as shown in the table.
3. **Fasteners:** Nail dimensions are listed diameter by length. SD screws are Simpson Strong-Tie Strong-Drive SD Connector screws. See pp. 25–26 for fastener information.

C-C-2026 ©2026 SIMPSON STRONG-TIE COMPANY INC.

PF/PFB/PFDB

Post-Frame Top-Flange Hangers

The PF series hangers have been designed to accommodate collated 0.148" x 1½" nails as well as 0.148" x 3" nails. The PFB and PFDB have dome-shaped joist nail holes that guide nails into the proper installation angle. The design also features a folded seat that raises the 2x joist very slightly above the seat radius to enable a tighter connection to the back of the hanger. For saddle hangers, PFDB and PFDSB are for solid sawn lumber carrying members, and PFDL is for LVL carrying members.

Features:

- Installation prongs make setting the hanger quick and easy
- Sizes are available for 2x8 joists

Material: PF — 18 gauge, PFB/PFDB — 20 gauge

Finish: Galvanized. Some products available in ZMAX® coating.

Installation:

- Use all specified fasteners; see General Notes.
- 0.148" x 3" purlin nails must be driven at an angle through the purlin into the header. Combine with top nails to achieve table loads.
- 0.148" x 1½" purlin nails must be driven at an angle into the purlin but do not penetrate into the header. Combine with back face fasteners and top nails to achieve table loads.

Codes: See p. 12 for Code Reference Key Chart

Web Applications: Visit **app.strongtie.com/hs** to access our Hanger Selector web application.

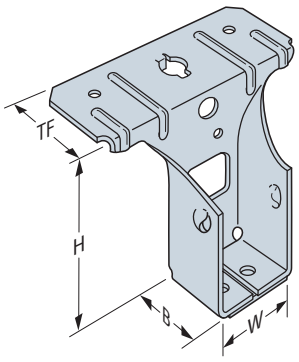

PF24B
(others similar)

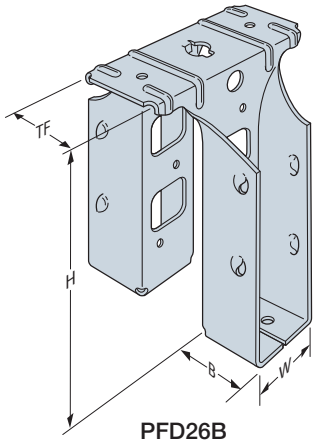

PFD26B
(others similar)

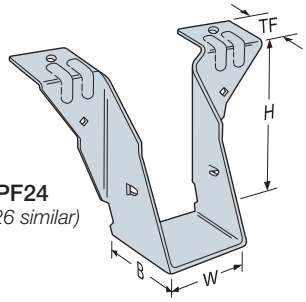

PF24
(PF26 similar)

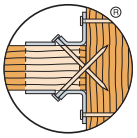

Double-Shear Nailing
(top view)

These products are available with additional corrosion protection. For more information, see pp. 13–19.

SD Many of these products are approved for installation with Strong-Drive® SD Connector screws. See pp. 380–382 for more information.

Model No.	Dimensions (in.)				Fasteners (in.)			DF/SP Allowable Loads					SPF/HF Allowable Loads					Code Ref.
	W	H	B	TF	Top	Face	Joist	Uplift (160)	Floor (100)	Snow (115)	Roof (125)	Wind (160)	Uplift (160)	Floor (100)	Snow (115)	Roof (125)	Wind (160)	
PF24	1⅜	3⅜	1½	1⅛	(2) 0.148 x 3	—	(2) 0.148 x 3	300	1,255	1,255	1,255	1,255	230	650	660	660	660	IBC, FL, LA
PF24B	1⅜	3⅜	1¼	1½	(2) 0.148 x 1½	(2) 0.148 x 1½	(2) 0.148 x 1½	345	965	965	965	965	295	785	785	785	785	
					(2) 0.148 x 3	—	(2) 0.148 x 3	375	1,005	1,005	1,005	1,005	290	680	680	680	680	
PFD24B	1⅜	3⅜	1¼	1⅜	(2) 0.148 x 1½	(4) 0.148 x 1½	(4) 0.148 x 1½	290	985	985	985	985	230	830	830	830	830	
					(2) 0.148 x 3	—	(4) 0.148 x 3	300	1,090	1,090	1,090	1,090	210	830	860	880	945	
PFDS24B	1⅜	3⅜	1¼	3⅜	(4) 0.148 x 1½	(4) 0.148 x 1½	(4) 0.148 x 1½	290	985	985	985	985	230	830	830	830	830	
					(4) 0.148 x 3	—	(4) 0.148 x 3	300	1,090	1,090	1,090	1,090	210	830	860	880	945	
PF26	1⅜	5⅜	1½	1⅛	(2) 0.148 x 3	—	(2) 0.148 x 3	300	1,255	1,255	1,255	1,255	455	805	850	880	905	
PF26B	1⅜	5⅜	1¼	1½	(2) 0.148 x 1½	(3) 0.148 x 1½	(4) 0.148 x 1½	545	1,235	1,235	1,235	1,235	470	1,005	1,005	1,005	1,005	
					(2) 0.148 x 3	—	(4) 0.148 x 3	625	1,200	1,200	1,200	1,200	480	810	810	810	810	
PFD26B	1⅜	5⅜	1¼	1⅜	(2) 0.148 x 1½	(6) 0.148 x 1½	(8) 0.148 x 1½	525	1,235	1,235	1,235	1,235	420	1,030	1,040	1,040	1,040	
					(2) 0.148 x 3	—	(8) 0.148 x 3	650	1,290	1,290	1,290	1,290	465	1,030	1,090	1,125	1,255	
PFDS26B	1⅜	5⅜	1¼	3⅜	(4) 0.148 x 1½	(6) 0.148 x 1½	(8) 0.148 x 1½	525	1,235	1,235	1,235	1,235	420	1,030	1,040	1,040	1,040	
					(4) 0.148 x 3	—	(8) 0.148 x 3	650	1,290	1,290	1,290	1,290	465	1,030	1,090	1,125	1,255	
PFDL26B	1⅜	5¼	1¼	1 13⁄16	(2) 0.148 x 1½	(6) 0.148 x 1½	(8) 0.148 x 1½	525	1,235	1,235	1,235	1,235	420	1,030	1,040	1,040	1,040	—
					(2) 0.148 x 3	—	(8) 0.148 x 3	670	1,345	1,350	1,350	1,350	465	1,030	1,090	1,125	1,255	
PF28B	1⅜	7⅛	1¼	1½	(2) 0.148 x 1½	(4) 0.148 x 1½	(6) 0.148 x 1½	675	1,335	1,335	1,335	1,335	580	1,085	1,085	1,085	1,085	
					(2) 0.148 x 3	—	(6) 0.148 x 3	850	1,580	1,650	1,650	1,650	655	1,115	1,115	1,115	1,115	
PFD28B	1⅜	7⅛	1¼	1⅜	(2) 0.148 x 1½	(8) 0.148 x 1½	(12) 0.148 x 1½	810	1,370	1,370	1,370	1,370	680	1,160	1,160	1,160	1,160	IBC, FL, LA
					(2) 0.148 x 3	—	(12) 0.148 x 3	1,050	1,580	1,680	1,745	1,975	730	1,230	1,315	1,370	1,570	
PFDS28B	1⅜	7⅛	1¼	3⅜	(4) 0.148 x 1½	(8) 0.148 x 1½	(12) 0.148 x 1½	895	1,370	1,370	1,370	1,370	730	1,160	1,160	1,160	1,160	
					(4) 0.148 x 3	—	(12) 0.148 x 3	1,050	1,580	1,680	1,745	1,975	730	1,230	1,315	1,370	1,570	
PFDL28B	1⅜	7	1¼	1 13⁄16	(2) 0.148 x 1½	(8) 0.148 x 1½	(12) 0.148 x 1½	810	1,370	1,370	1,370	1,370	680	1,160	1,160	1,160	1,160	—
					(2) 0.148 x 3	—	(12) 0.148 x 3	1,050	1,580	1,680	1,745	1,970	730	1,230	1,315	1,370	1,570	

1. Uplift loads have been increased for earthquake or wind loading with no further increase allowed. Reduce where other loads govern.
2. **Fasteners:** Nail dimensions are listed diameter by length. See pp. 25–26 for fastener information.

C-C-2026 © 2026 SIMPSON STRONG-TIE COMPANY INC.

Simpson Strong-Tie® Wood Construction Connectors

Face-Mount Hangers — I-Joists, Glulam and SCL

SIMPSON Strong-Tie

These products are available with additional corrosion protection. For more information, see pp. 13–19.

Codes: See p. 12 for Code Reference Key Chart.

Actual Joist Size (in.)	Model No.	Ga.	I-Joist Compatible	Web Stiff Reqd.	Dimensions (in.) W	H	B	Min./ Max.	Fasteners (in.) Face	Joist	Allowable Loads DF/SP Species Header Uplift (160)	Floor (100)	Snow (115)	Roof (125)	SPF/HF Species Header Floor (100)	Snow (115)	Roof (125)	Code Ref.
2½ x 16	IUS2.56/16	18	•	—	2⅝	16	2	Min.	(14) 0.148 x 3	—	70	1,660	1,805	1,805	1,425	1,555	1,555	IBC, FL, LA
								Max.	(16) 0.148 x 3	—	70	1,805	1,805	1,805	1,555	1,555	1,555	
	MIU2.56/16	16	•	—	2⅝16	15⅞16	2½	—	(24) 0.162 x 3½	(2) 0.148 x 1½	230	3,455	3,920	4,045	2,970	3,370	3,480	
	U314	16	•	✓	2⅝16	10½	2	—	(16) 0.162 x 3½	(6) 0.148 x 1½	970	1,945	2,205	2,375	1,675	1,895	2,045	
	HU316 / HUC316	14	•	✓	2⅝16	14⅜16	2½	—	(20) 0.162 x 3½	(8) 0.148 x 1½	1,515	2,975	3,360	3,610	2,565	2,895	3,110	
2½ x 18	MIU2.56/18	16	•	—	2⅝16	17⅞16	2½	—	(26) 0.162 x 3½	(2) 0.148 x 1½	230	3,745	4,045	4,045	3,220	3,480	3,480	
	HU316 / HUC316	14	•	✓	2⅝16	14⅛	2½	—	(20) 0.162 x 3½	(8) 0.148 x 1½	1515	2,975	3,360	3,610	2,565	2,895	3,110	
2½ x 20	MIU2.56/20	16	•	—	2⅝16	19⅞16	2½	—	(28) 0.162 x 3½	(2) 0.148 x 1½	230	4,030	4,060	4,060	3,465	3,495	3,495	
2½ x 22 to 26	MIU2.56/20	16	•	✓	2⅝16	19⅞16	2½	—	(28) 0.162 x 3½	(2) 0.148 x 1½	230	4,030	4,060	4,060	3,465	3,495	3,495	
2⅝16 x 9¼ to 26	2⅝16" wide joists use the same hangers as 2½" wide joists and have the same loads.																	
3 x 9½	MIU3.12/9	16	•	—	3⅛	9⅛16	2½	—	(16) 0.162 x 3½	(2) 0.148 x 1½	230	2,305	2,615	2,820	1,980	2,245	2,425	
	HU210-2 / HUC210-2	14	•	✓	3⅛	8⅝16	2½	Max.	(18) 0.162 x 3½	(10) 0.148 x 3	1,795	2,680	3,020	3,250	2,305	2,605	2,800	
3 x 11⅞	MIU3.12/11	16	•	—	3⅛	11⅛	2½	—	(20) 0.162 x 3½	(2) 0.148 x 1½	230	2,880	3,135	3,135	2,475	2,695	2,695	
	HU212-2 / HUC212-2	14	•	✓	3⅛	10⅜16	2½	Max.	(22) 0.162 x 3½	(10) 0.148 x 3	1,795	3,275	3,695	3,970	2,820	3,180	3,425	
3⅛ glulam	HU3.25/12 / HUC3.25/12	14		—	3¼	11¾	2½	—	(24) 0.162 x 3½	(12) 0.148 x 3	1,795	3,570	4,030	4,335	3,075	3,470	3,735	
	HU3.25/16 / HUC3.25/16	14		—	3¼	13¹³⁄16	2½	Min.	(20) 0.162 x 3½	(8) 0.148 x 3	1,515	2,975	3,360	3,610	2,560	2,890	3,105	
				—				Max.	(26) 0.162 x 3½	(12) 0.148 x 3	1,795	3,870	4,365	4,695	3,330	3,755	4,040	
	HUCQ210-2-SDS	14		—	3¼	9	3	—	(12) ¼ x 2½ SDS	(6) ¼ x 2½ SDS	2,345	4,315	4,315	4,315	3,600	3,710	3,710	
	HGUS3.25/10	12		—	3¼	8⅝	4	—	(46) 0.162 x 3½	(16) 0.162 x 3½	4,095	9,100	9,100	9,100	7,825	7,825	7,825	
	HGUS3.25/12	12		—	3¼	10⅝	4	—	(56) 0.162 x 3½	(20) 0.162 x 3½	5,205	11,915	13,330	14,290	10,015	11,550	12,045	
	LGU3.25-SDS	10		—	3¼	8 to 30	4½	—	(16) ¼ x 2½ SDS	(12) ¼ x 2½ SDS	5,555	6,720	7,310	7,310	4,840	5,265	5,265	
3½ x 5¼	HHUS46	14		—	3⅝	5⅛	3	—	(14) 0.162 x 3½	(6) 0.162 x 3½	1,320	2,785	3,155	3,405	2,395	2,715	2,930	
	HGUS46	12		—	3⅝	5⅝16	4	—	(20) 0.162 x 3½	(8) 0.162 x 3½	2,155	4,355	4,875	5,230	3,755	4,875	5,230	
3½ x 7¼	HUS48	14		—	3⅝16	6¹⁵⁄16	2	—	(6) 0.162 x 3½	(6) 0.162 x 3½	1,320	1,630	1,840	1,980	1,400	1,580	1,705	
	HHUS48	14		—	3⅝	7⅛	3	—	(22) 0.162 x 3½	(8) 0.162 x 3½	1,780	4,210	4,770	5,140	3,615	4,095	4,415	
	HGUS48	12		—	3⅝	7⅛16	4	—	(36) 0.162 x 3½	(12) 0.162 x 3½	3,235	7,460	7,460	7,460	6,415	6,415	6,415	
3½ x 9½	IUS3.56/9.5	18	•	—	3⅝	9½	2	—	(10) 0.148 x 3	—	70	1,185	1,345	1,455	1,020	1,160	1,250	IBC, FL, LA
	MIU3.56/9	16	•	—	3⅝16	8¹³⁄16	2½	—	(16) 0.162 x 3½	(2) 0.148 x 1½	210	2,305	2,615	2,820	1,980	2,245	2,425	
	U410	16	•	✓	3⅝16	8⅜	2	—	(14) 0.162 x 3½	(6) 0.148 x 3	970	2,015	2,285	2,465	1,735	1,965	2,120	
	HUS410	14		—	3⅝16	8¹⁵⁄16	2	—	(8) 0.162 x 3½	(8) 0.162 x 3½	3,285	2,175	2,455	2,640	1,870	2,110	2,270	
	HHUS410	14		—	3⅝	9	3	—	(30) 0.162 x 3½	(10) 0.162 x 3½	3,565	5,635	6,380	6,445	4,845	5,486	5,545	
	HU410/HUC410	14	•	✓	3⅝16	8⅜	2½	Min.	(14) 0.162 x 3½	(6) 0.148 x 3	1,135	2,085	2,350	2,530	1,795	2,020	2,165	
								Max.	(18) 0.162 x 3½	(10) 0.148 x 3	1,795	2,680	3,020	3,250	2,305	2,605	2,800	
	HUCQ410-SDS	14		—	3⅝16	9	3	—	(12) ¼ x 2½ SDS	(6) ¼ x 2½ SDS	2,265	4,500	4,500	4,500	3,240	3,240	3,240	
	HGUS410	12		—	3⅝	9⅛16	4	—	(46) 0.162 x 3½	(16) 0.162 x 3½	4,095	9,100	9,100	9,100	7,825	7,825	7,825	
	LGU3.63-SDS	10		—	3⅝	8 to 30	4½	—	(16) ¼ x 2½ SDS	(12) ¼ x 2½ SDS	5,555	6,720	6,720	6,720	4,840	4,840	4,840	
	MGU3.63-SDS	10		—	3⅝	9¼ to 30	4½	—	(24) ¼ x 2½ SDS	(16) ¼ x 2½ SDS	7,260	9,450	9,450	9,450	6,805	6,805	6,805	
3½ x 11⅞	IUS3.56/11.88	18	•	—	3⅝	11⅞	2	—	(12) 0.148 x 3	—	70	1,420	1,615	1,745	1,220	1,390	1,485	
	MIU3.56/11	16	•	—	3⅝16	11⅛	2½	—	(20) 0.162 x 3½	(2) 0.148 x 1½	210	2,880	3,135	3,135	2,475	2,695	2,695	
	U414	16	•	✓	3⅝16	10	2	—	(16) 0.162 x 3½	(6) 0.148 x 3	970	2,305	2,615	2,820	1,980	2,245	2,425	
	HHUS410	14		—	3⅝	9	3	—	(30) 0.162 x 3½	(10) 0.162 x 3½	3,565	5,635	6,380	6,445	4,845	5,486	5,545	
	HUS412	14		—	3⅝16	10¾	2	—	(10) 0.162 x 3½	(10) 0.162 x 3½	3,435	2,720	3,070	3,300	2,340	2,640	2,840	
	HU412 / HUC412	14	•	✓	3⅝16	10⅝16	2½	Min.	(16) 0.162 x 3½	(6) 0.148 x 3	1,135	2,380	2,685	2,890	2,050	2,315	2,490	
								Max.	(22) 0.162 x 3½	(10) 0.148 x 3	1,795	3,275	3,695	3,970	2,820	3,180	3,425	
	HUCQ412-SDS	14		—	3⅝16	11		—	(14) ¼ x 2½ SDS	(6) ¼ x 2½ SDS	2,265	5,045	5,045	5,045	3,630	3,630	3,630	
	HGUS412	12		—	3⅝	10⅞16	4	—	(56) 0.162 x 3½	(20) 0.162 x 3½	5,205	11,915	13,330	14,290	10,280	12,160	12,420	
	LGU3.63-SDS	10		—	3⅝	8 to 30	4½	—	(16) ¼ x 2½ SDS	(12) ¼ x 2½ SDS	5,555	6,720	6,720	6,720	4,840	4,840	4,840	
	MGU3.63-SDS	10		—	3⅝	9¼ to 30	4½	—	(24) ¼ x 2½ SDS	(16) ¼ x 2½ SDS	7,260	9,450	9,450	9,450	6,805	6,805	6,805	
	HGU3.63-SDS	7		—	3⅝	11 to 30	5¼	—	(36) ¼ x 2½ SDS	(24) ¼ x 2½ SDS	9,460	13,160	13,160	13,160	9,475	9,475	9,475	

See footnotes on p. 164.

C-C-2026 © 2026 SIMPSON STRONG-TIE COMPANY INC.

Simpson Strong-Tie® Wood Construction Connectors

Face-Mount Hangers — I-Joists, Glulam and SCL

These products are available with additional corrosion protection. For more information, see pp. 13–19.

SS For stainless-steel fasteners, see p. 25.

Codes: See p. 12 for Code Reference Key Chart.

	Actual Joist Size (in.)	Model No.	Ga.	I-Joist Compatible	Web Stiff Reqd.	Dimensions (in.) W	H	B	Min./ Max.	Fasteners (in.) Face	Joist	Allowable Loads DF/SP Species Header Uplift (160)	Floor (100)	Snow (115)	Roof (125)	SPF/HF Species Header Floor (100)	Snow (115)	Roof (125)	Code Ref.
	5¼ x 9½	HU610 / HUC610	14		—	5½	7⅝	2½	Min.	(14) 0.162 x 3½	(6) 0.162 x 3½	1,345	2,085	2,350	2,530	1,795	2,025	2,180	IBC, FL, LA
						5½	7⅝	2½	Max.	(18) 0.162 x 3½	(8) 0.162 x 3½	1,795	2,680	3,020	3,250	2,305	2,605	2,800	
		HGUS5.50/10	12		—	5½	8 15/16	4	—	(46) 0.162 x 3½	(16) 0.162 x 3½	4,095	9,100	9,100	9,100	7,825	7,825	7,825	
		HHUS5.50/10	14		—	5½	9	3	—	(30) 0.162 x 3½	(10) 0.162 x 3½	3,565	5,635	6,380	6,880	4,845	5,490	5,915	
		HUCQ610-SDS	14		—	5½	9	3	—	(12) ¼ x 2½ SDS	(6) ¼ x 2½ SDS	2,325	4,680	5,185	5,185	3,370	3,735	3,735	
		MGU5.50-SDS	10		—	5½	9¼ to 30	4½	—	(24) ¼ x 2½ SDS	(16) ¼ x 2½ SDS	7,260	9,450	9,450	9,450	6,805	6,805	6,805	
	5¼ x 11⅞	HHUS5.50/10	14		—	5½	9	3	—	(30) 0.162 x 3½	(10) 0.162 x 3½	3,565	5,635	6,380	6,880	4,845	5,490	5,915	
		MGU5.50-SDS	10		—	5½	9¼ to 30	4½		(24) ¼ x 2½ SDS	(16) ¼ x 2½ SDS	7,260	9,450	9,450	9,450	6,805	6,805	6,805	
		HU612 / HUC612	14		—	5½	9⅜	2½	Min.	(16) 0.162 x 3½	(6) 0.162 x 3½	1,345	2,380	2,685	2,890	2,050	2,315	2,490	
						5½	9⅜	2½	Max.	(22) 0.162 x 3½	(8) 0.162 x 3½	1,795	3,275	3,695	3,970	2,820	3,180	3,425	
		HGUS5.50/12	12		—	5½	10½	4	—	(56) 0.162 x 3½	(20) 0.162 x 3½	5,205	11,915	13,330	14,290	10,280	12,420	12,420	
SS		HUCQ612-SDS	14		—	5½	11	3	—	(14) ¼ x 2½ SDS	(6) ¼ x 2½ SDS	2,325	5,185	5,185	5,185	3,735	3,735	3,735	
	5¼ x 14	HHUS5.50/10	14		—	5½	9	3	—	(30) 0.162 x 3½	(10) 0.162 x 3½	3,565	5,635	6,380	6,880	4,845	5,490	5,915	
		MGU5.50-SDS	10		—	5½	9¼ to 30	4½	—	(24) ¼ x 2½ SDS	(16) ¼ x 2½ SDS	7,260	9,450	9,450	9,450	6,805	6,805	6,805	
SS		HUCQ612-SDS	14		—	5½	11	3	—	(14) ¼ x 2½ SDS	(6) ¼ x 2½ SDS	2,325	5,185	5,185	5,185	3,735	3,735	3,735	
		HGU5.50-SDS	7		—	5½	11 to 30	5¼	—	(36) ¼ x 2½ SDS	(24) ¼ x 2½ SDS	9,460	13,160	13,160	13,160	9,475	9,475	9,475	
		HGUS5.50/14	12		—	5½	12½	4	—	(66) 0.162 x 3½	(22) 0.162 x 3½	5,360	13,860	14,350	14,350	11,960	12,420	12,420	
		HU614 / HUC614	14		—	5½	11⅞	2½	Min.	(18) 0.162 x 3½	(8) 0.162 x 3½	1,795	2,975	3,360	3,610	2,565	2,895	3,110	
						5½	11⅞	2½	Max.	(24) 0.162 x 3½	(12) 0.162 x 3½	2,695	3,870	4,365	4,695	3,330	3,760	4,045	
		HHGU5.50-SDS	3		—	5½	13 to 30	5¼	—	(44) ¼ x 2½ SDS	(28) ¼ x 2½ SDS	14,145	17,345	17,345	17,345	12,490	12,490	12,490	
	5¼ x 16	HHUS5.50/10	14		—	5½	9	3	—	(30) 0.162 x 3½	(10) 0.162 x 3½	3,565	5,635	6,380	6,880	4,845	5,490	5,915	
		MGU5.50-SDS	10		—	5½	9¼ to 30	4½	—	(24) ¼ x 2½ SDS	(16) ¼ x 2½ SDS	7,260	9,450	9,450	9,450	6,805	6,805	6,805	
SS		HUCQ612-SDS	14		—	5½	11	3	—	(14) ¼ x 2½ SDS	(6) ¼ x 2½ SDS	2,325	5,185	5,185	5,185	3,735	3,735	3,735	
		HGU5.50-SDS	7		—	5½	11 to 30	5¼	—	(36) ¼ x 2½ SDS	(24) ¼ x 2½ SDS	9,460	13,160	13,160	13,160	9,475	9,475	9,475	
		HGUS5.50/14	12		—	5½	12½	4	—	(66) 0.162 x 3½	(22) 0.162 x 3½	5,360	13,860	14,350	14,350	11,960	12,420	12,420	
		HU616 / HUC616	14		—	5½	13⅜	2½	Min.	(20) 0.162 x 3½	(8) 0.162 x 3½	1,795	2,975	3,360	3,610	2,565	2,895	3,110	
						5½	13⅜	2½	Max.	(26) 0.162 x 3½	(12) 0.162 x 3½	2,695	3,870	4,365	4,695	3,330	3,760	4,045	
		HHGU5.50-SDS	3		—	5½	13 to 30	5¼	—	(44) ¼ x 2½ SDS	(28) ¼ x 2½ SDS	14,145	17,345	17,345	17,345	12,490	12,490	12,490	
SS	5¼ x 18	HUCQ612-SDS	14		—	5½	11	3	—	(14) ¼ x 2½ SDS	(6) ¼ x 2½ SDS	2,325	5,185	5,185	5,185	3,735	3,735	3,735	
		HGUS5.50/14	12		—	5½	12½	4	—	(66) 0.162 x 3½	(22) 0.162 x 3½	5,360	13,860	14,350	14,350	11,960	12,420	12,420	
		HU616 / HUC616	14		—	5½	12 1/16	2½	Min.	(20) 0.162 x 3½	(8) 0.162 x 3½	1,795	2,975	3,360	3,610	2,565	2,895	3,110	
						5½	12 1/16	2½	Max.	(26) 0.162 x 3½	(12) 0.162 x 3½	2,695	3,870	4,365	4,695	3,330	3,760	4,045	
		HGU5.50-SDS	7		—	5½	16 to 17⅞	5¼	—	(36) ¼ x 2½ SDS	(24) ¼ x 2½ SDS	9,460	13,160	13,160	13,160	9,475	9,475	9,475	
		MGU5.50-SDS	10		—	5½	16 to 17⅞	4½	—	(24) ¼ x 2½ SDS	(16) ¼ x 2½ SDS	7,260	9,450	9,450	9,450	6,805	6,805	6,805	
		HHGU5.50-SDS	3		—	5½	16 to 17⅞	5¼	—	(44) ¼ x 2½ SDS	(28) ¼ x 2½ SDS	14,145	17,345	17,345	17,345	12,490	12,490	12,490	
	5¼ x 20 to 30	MGU5.50-SDS	10		—	5½	18 to 30	4½	—	(24) ¼ x 2½ SDS	(16) ¼ x 2½ SDS	7,260	9,450	9,450	9,450	6,805	6,805	6,805	
		HGU5.50-SDS	7		—	5½	18 to 30	5¼	—	(36) ¼ x 2½ SDS	(24) ¼ x 2½ SDS	9,460	13,160	13,160	13,160	9,475	9,475	9,475	
		HHGU5.50-SDS	3		—	5½	18 to 30	5¼	—	(44) ¼ x 2½ SDS	(28) ¼ x 2½ SDS	14,145	17,345	17,345	17,345	12,490	12,490	12,490	
	5½ glulam	HU610 / HUC610	14		—	5½	7⅝	2½	Max.	(18) 0.162 x 3½	(8) 0.162 x 3½	1,795	2,680	3,020	3,250	2,305	2,605	2,800	
		HGUS5.50/10	12		—	5½	8 15/16	4	—	(46) 0.162 x 3½	(16) 0.162 x 3½	4,095	9,100	9,100	9,100	7,825	7,825	7,825	
		HUCQ610-SDS	14		—	5½	9	3	—	(12) ¼ x 2½ SDS	(6) ¼ x 2½ SDS	2,325	4,680	5,185	5,185	3,370	3,735	3,735	
		HHUS5.50/10	14		—	5½	9	3	—	(30) 0.162 x 3½	(10) 0.162 x 3½	3,565	5,635	6,380	6,880	4,845	5,490	5,915	
		MGU5.62-SDS	10		—	5⅝	9¼ to 30	4½	—	(24) ¼ x 2½ SDS	(16) ¼ x 2½ SDS	7,260	9,450	9,450	9,450	6,805	6,805	6,805	
	5½ glulam	HU612 / HUC612	14		—	5½	9⅜	2½	Max.	(22) 0.162 x 3½	(8) 0.162 x 3½	1,795	3,275	3,695	3,970	2,820	3,180	3,425	
		HUCQ612-SDS	14		—	5½	11	3	—	(14) ¼ x 2½ SDS	(6) ¼ x 2½ SDS	2,325	5,185	5,185	5,185	3,735	3,735	3,735	
		HGU5.62-SDS	7		—	5⅝	11 to 30	5¼	—	(36) ¼ x 2½ SDS	(24) ¼ x 2½ SDS	5,360	13,735	14,360	14,360	11,810	12,350	12,350	
		HGUS5.50/14	12		—	5½	12½	4	—	(66) 0.162 x 3½	(22) 0.162 x 3½	5,515	13,860	14,350	14,350	11,960	12,420	12,420	
		HU616 / HUC616	14		—	5½	13⅜	2½	Max.	(26) 0.162 x 3½	(12) 0.162 x 3½	2,695	3,870	4,365	4,695	3,330	3,760	4,045	
		HHGU5.62-SDS	3		—	5⅝	13 to 30	5¼	—	(44) ¼ x 2½ SDS	(28) ¼ x 2½ SDS	14,145	17,345	17,345	17,345	12,490	12,490	12,490	

See footnotes on p. 164.

C-C-2026 © 2026 SIMPSON STRONG-TIE COMPANY INC.

Simpson Strong-Tie® Wood Construction Connectors

H/TSP

Seismic and Hurricane Ties (cont.)

These products are available with additional corrosion protection. For more information, see pp. 13–19.

SS For stainless-steel fasteners, see p. 25.

SD Many of these products are approved for installation with Strong-Drive® SD Connector screws. See pp. 380–382 for more information.

Model No.	Ga.	Fasteners (in.) To Rafters/Truss	Fasteners (in.) To Plates	Fasteners (in.) To Studs	DF/SP Allowable Loads Uplift (160)	DF/SP Allowable Loads Lateral (160) F_1	DF/SP Allowable Loads Lateral (160) F_2	Uplift with 0.131" x 1½" Nails (160)	SPF/HF Allowable Loads Uplift (160)	SPF/HF Allowable Loads Lateral (160) F_1	SPF/HF Allowable Loads Lateral (160) F_2	Uplift with 0.131" x 1½" Nails (160)	Code Ref.
H1A	18	(4) 0.131 x 1½	(4) 0.131 x 1½	—	545	420	265	—	470	360	205	—	IBC, FL, LA
H1.81Z	18	(6) 0.131 x 1½	(4) 0.131 x 2½	—	540	440	170	460	465	380	130	395	—
H2A	18	(5) 0.131 x 1½	(2) 0.131 x 1½	(5) 0.131 x 1½	525	130	55	—	495	130	55	—	IBC, FL, LA
H2ASS	18	(5) 0.131 x 1½	(2) 0.131 x 1½	(5) 0.131 x 1½	400	130	55	400	345	130	55	345	—
H2.5A	18	(5) 0.131 x 2½	(5) 0.131 x 2½	—	700	110	110	625	615	110	110	540	IBC, FL, LA
H2.5ASS	18	(5) 0.131 x 2½	(5) 0.131 x 2½	—	440	75	70	365	380	75	70	310	—
H2.5T	18	(5) 0.131 x 2½	(5) 0.131 x 2½	—	590	135	145	480	565	135	145	475	IBC, FL, LA
H3	18	(4) 0.131 x 2½	(4) 0.131 x 2½	—	400	210	170	400	365	180	145	290	
H3SS	18	(4) 0.131 x 2½	(4) 0.131 x 2½	—	280	145	120	275	225	100	85	210	—
H6 (to Plates)	16	—	(8) 0.131 x 2½	(8) 0.131 x 2½	930	—	—	—	800	—	—	—	IBC, FL, LA
H6 (to Rim)	16	(8) 0.131 x 2½	—	(8) 0.131 x 2½	1,230	—	—	—	1,065	—	—	—	
H7Z	16	(4) 0.131 x 2½	(2) 0.131 x 1½	(8) 0.131 x 2½	830	410	—	—	715	355	—	—	
H8	18	(5) 0.148 x 1½	(5) 0.148 x 1½	—	780	95	90	630	710	95	90	510	
H8SS	18	(5) 0.148 x 1½	(5) 0.148 x 1½	—	610	90	120	440	370	90	55	335	—
H10A Field Bent	18	(9) 0.148 x 1½	(9) 0.148 x 1½	—	780	565	285	—	760	485	285	—	IBC, FL, LA
H10A	18	(9) 0.148 x 1½	(9) 0.148 x 1½	—	1,040	565	285	—	1,015	485	285	—	
H10ASS	18	(9) 0.148 x 1½	(9) 0.148 x 1½	—	970	565	170	—	835	485	170	—	—
H10AR	18	(9) 0.148 x 1½	(9) 0.148 x 1½	—	1,050	490	285	—	905	420	285	—	
H10S	18	(8) 0.131 x 1½	(8) 0.131 x 1½	(8) 0.131 x 2½	910	660	215	550	785	570	185	475	IBC, FL, LA
H10A-2	18	(9) 0.148 x 1½	(9) 0.148 x 1½	—	1,080	680	260	—	930	585	225	—	
H11Z	18	(6) 0.162 x 2½	(6) 0.162 x 2½	—	830	525	760	—	715	450	655	—	—
H14	18	(12) 0.131 x 1½	(13) 0.131 x 2½	—	1,275	725	285	—	1,050	480	245	—	IBC, FL, LA
		(12) 0.131 x 1½	(15) 0.131 x 2½	—	1,340	670	230	—	1,050	480	245	—	
TSP	16	(9) 0.148 x 1½	(6) 0.148 x 1½	—	755	310	190	—	650	265	160	—	
		(9) 0.148 x 1½	(6) 0.148 x 3	—	1,015	310	190	—	875	265	160	—	

1. See pp. 288–289 for Straps and Ties General Notes.
2. Allowable loads are for one anchor. A minimum rafter thickness of 2½" must be used when framing anchors are used on each side of the joist and on the same side of the plate (exception: connectors installed such that nails on opposite side don't interfere).
3. Allowable DF/SP uplift load for stud-to-bottom plate installation (see detail 12) is 390 lb. (H2.5A); 265 lb. (H2.5ASS); and 310 lb. (H8). For SPF/HF values, multiply these values by 0.86.
4. Allowable loads in the F_1 direction are not intended to replace diaphragm boundary members and do not account for possible cross-grain bending of the truss or rafter members.
5. When cross-grain bending or cross-grain tension cannot be avoided in the members, mechanical reinforcement to resist such forces shall be considered by the designer.
6. Southern pine allowable uplift loads for H10A = 1,105 lb. (160), H2.5A with 0.131" x 1½" nails = 635 lb. (160) and H2.5A with 0.131" x 2½" nails = 730 lb. (160).
7. H10S can have the stud offset a maximum of 1" from the rafter (center to center) for a reduced uplift of 890 lb. (DF/SP) and 765 lb. (SPF).
8. H10S nails to plates are optional for uplift but required for lateral loads.
9. Some load values for the stainless-steel connectors shown here are lower than those for the carbon-steel versions. Ongoing test programs have shown this also to be the case with other stainless-steel connectors in the product line that are installed with nails. Visit **strongtie.com/corrosion** for updated information.
10. The allowable loads of stainless-steel connectors match carbon-steel connectors when installed with stainless-steel Strong-Drive SCNR™ Ring-Shank Connector nails. For more information, refer to engineering letter L-F-SSNAILS at **strongtie.com**.
11. Simpson Strong-Tie offers stainless-steel Strong-Drive SCNR Ring-Shank Connector nails. For bulk SCNR nails, see p. 375; for collated SCNR nails, see p. 376. For general fastener information, see pp. 25–26.
12. Allowable DF/SP/SPF uplift load for the H2.5A fastened to a 2x4 truss bottom chord and double top plates using five 0.131" x 1½" nails in the top plates and three 0.131" x 1½" nails in the lowest three flange holes into the truss bottom chord is 260 lb. (160).
13. For TSP installed stud to single plate see pp. 303–305.
14. **Fasteners:** Nail dimensions are listed diameter by length. See pp. 25–26 for fastener information.
15. Using Strong-Drive SD Connector (SD9112) for 0.131" x 1½" and 0.148" x 1½", Strong-Drive SD Connector (SD9212) for 0.131" x 2½" (and longer) and 0.148" x 2½" (and longer), Strong-Drive SD Connector (SD10212) for 0.162" x 2½" (and longer) will get the same load as nails.

C-C-2026 © 2026 SIMPSON STRONG-TIE COMPANY INC.

HL

Heavy Angle and Gusset

Versatile angle gussets and heavy angles promote standardization and construction economy, and are compatible with Simpson Strong-Tie structural hardware.

Finish: 7 gauge models — galvanized;
3 gauge models — Simpson Strong-Tie gray paint.
May be ordered HDG or black powder coat (add HDG or PC to model no.).

Options:

- Gussets may be added to HL models when L ≥ 5" (specify G after model number, as in HL46G).

Codes: See p. 12 for Code Reference Key Chart

These products are available with additional corrosion protection. For more information, see pp. 13–19.

Model No.	Ga.	Dimensions (in.)						Bolts (Total)		DF/SP Allowable Loads		Code Ref.
		W_1 and W_2	L	D_1	D_2	D_3	D_4	Qty.	Dia.	Uplift (160)	F_1 (160)	
Single Row Angles												
HL33	7	3¼	2½	1¼	—	2	—	2	½	740	1,040	
HL35	7	3¼	5	1¼	2½	2	—	4	½	740	1,310	
HL37	7	3¼	7½	1¼	2½	2	—	6	½	740	1,310	
HL43	3	4¼	3	1½	—	2¾	—	2	¾	1,275	1,445	—
HL46	3	4¼	6	1½	3	2¾	—	4	¾	1,275	1,680	
HL49	3	4¼	9	1½	3	2¾	—	6	¾	1,275	1,680	
Double Row Angles												
HL53	7	5¾	2½	1¼	—	2	2½	4	½	740	1,310	
HL55	7	5¾	5	1¼	2½	2	2½	8	½	740	1,310	
HL57	7	5¾	7½	1¼	2½	2	2½	12	½	740	1,310	
HL73	3	7¼	3	1½	—	2¾	3	4	¾	2,445	2,885	—
HL76	3	7¼	6	1½	3	2¾	3	8	¾	2,445	4,310	
HL79	3	7¼	9	1½	3	2¾	3	12	¾	2,445	4,310	

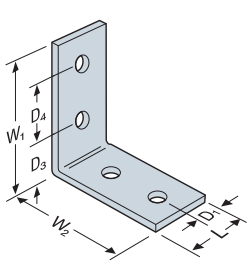

HL53

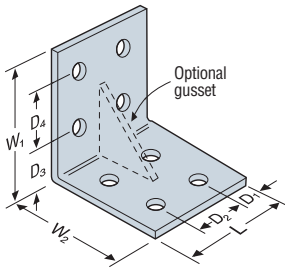

HL55

1. See pp. 288–289 for Straps and Ties General Notes.
2. For SPF/HF lumber, use 0.85 x DF/SP allowable loads.
3. Parts should be centered on the face of the member, which is at least as wide as the angle, to which they are attached.
4. Wood members for the "3" and "5" series must have a minimum thickness of 3½" for table loads to apply.
5. Wood members for the "4" and "7" series must have a minimum thickness of 5⅛" for table loads to apply.
6. Allowable loads are for a single connector. Uplift loads may be doubled when using two connectors. Connectors are required on both sides to achieve lateral loads in both directions. Lateral loads may not be doubled.
7. Lag screws of equal diameter (minimum 5" long) may be substituted for bolts in the beam with no reduction in load.
8. All references to bolts are for structural-quality through bolts (not lag screws or carriage bolts) equal to or better than ASTM A307, Grade A.

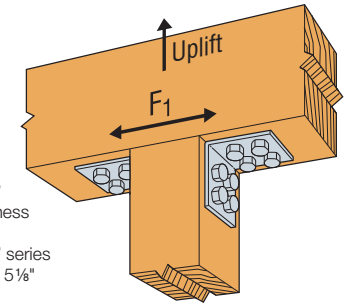

Typical HL55 Installation

Z

Clip

The Z clip secures 2x4 flat blocking between joists or trusses to support sheathing.

Material: See table

Finish: Galvanized

Installation:

- Use all specified fasteners; see General Notes.
- Z clips do not provide lateral stability. Do not walk on stiffeners or apply load until diaphragm is installed and nailed to stiffeners.

Codes: See p. 12 for Code Reference Key Chart

Model No.	Ga.	Dimensions (in.)				Fasteners[1] (Total) (in.)	DF/SP Allowable Download (100/115/125/160)	Code Ref.
		W	H	B	TF			
Z2	20	2⁵⁄₁₆	1½	1⅜	1⅜	(4) 0.148 x 1½	420	IBC, FL, LA
Z4	12	1½	3½	2⅛	1¾	(2) 0.162 x 3½	420	
Z28	28	2⁵⁄₁₆	1½	1⅜	1⅜	0.148 x 1½[1]	—	—
Z38	28	2⁵⁄₁₆	2½	1⅜	1⅜	0.148 x 1½[1]	—	
Z44	12	2½	3½	2	1⅜	(4) 0.162 x 3½	775	IBC, FL, LA

1. Z28 and Z38 do not have nail holes. Fastener quantity and type shall be per designer.
2. Z4 loads apply with a nail in the top and a nail in the seat.
3. For SPF/HF lumber, use 0.86 x DF/SP allowable loads.
4. **Fasteners:** Nail dimensions are listed diameter by length. See pp. 25–26 for fastener information.

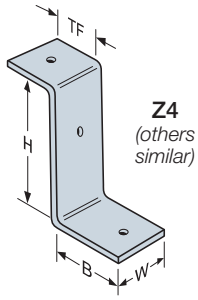

Z4 *(others similar)*

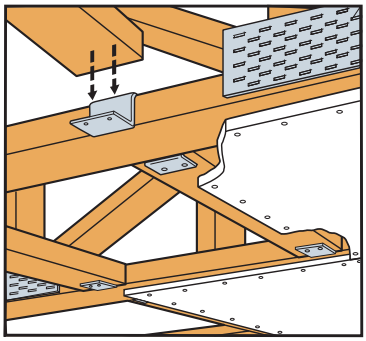

Typical Z2 Installation

C-C-2026 © 2026 SIMPSON STRONG-TIE COMPANY INC.