1. DESIGN CRITERIA:

A. DESIGNED USING INTERNATIONAL BUILDING CODE, 2018 EDITION
B. ROOF LIVE LOAD (SNOW LOAD) = 150 PSF
C. ROOF DEAD LOAD = 17 PSF
D. FLOOR LIVE LOAD = 40 PSF
E. FLOOR DEAD LOAD = 15 PSF
F. WIND SPEED = 115 MPH
G. EXPOSURE TYPE = C
H. SEISMIC PARAMETERS, Ss = 42 %
S1 = 13 %
I. MINIMUM FROST DEPTH = 24 INCHES

PRELIMINARY
NOT FOR CONSTRUCTION

2. FOUNDATIONS & SLAB ON GRADE:

A. ALL FOOTING AND FOUNDATION DESIGNS ARE BASED ON AN ALLOWABLE SOIL BEARING CAPACITY OF 1,500 PSF BEARING ON COMPETENT NATIVE SOIL (CODE MINIMUM). IF THE SITE HAS A LOWER BEARING CAPACITY THAN ASSUMED THE FOUNDATION PLAN WILL NEED TO BE REDESIGNED. IF SOIL IS DISTURBED, COMPACT SOIL IN 6" LIFTS TO 95% MAXIMUM DRY DENSITY PER ASTM D1557.

B. MINIMUM FROST DEPTH FROM LOWEST ADJACENT FINISH GRADE TO BOTTOM OF FOOTING SHALL BE MAINTAINED FOR ALL EXTERIOR FOOTINGS.

C. CONTRACTOR TO VERIFY LOCATIONS FOR STEP FOOTINGS AND FOUNDATION WALLS BASED ON SITE RELATED FINISHED GRADE, IF NECESSARY. FOOTING STEPS ARE TO BE A MAXIMUM OF (2) VERTICALLY TO (1) HORIZONTALLY.

D. ALL SLABS SHALL HAVE REINFORCING PER PLANS 4 CONTROL JOINTS @ 10'-0" SPACING MAX.

E. ALL STRUCTURAL FILL BELOW FOOTINGS SHALL EXTEND OUT PAST FOOTINGS AT A SLOPE OF 1 HORIZONTAL TO 2 VERTICAL TO COMPETENT SOILS.

F. PROVIDE ADEQUATE DRAINAGE BEHIND ALL WALLS TO ALLEVIATE ANY STANDING WATER.

G. ALL CONCRETE PAD 4 APRON LOCATIONS TO BE SECURED TO FOUNDATION WITH #4 DOWELS @ 24" O.C. EXTEND EXPOSED SIDES A MINIMUM OF 24" BELOW FINISHED GRADE.

H. MINIMUM CONCRETE SLAB DEPTH IS 4".

3. CONCRETE:

A. THE MINIMUM COMPRESSIVE STRENGTHS FOR CONCRETE AT 28 DAYS SHALL BE AS FOLLOWS (DESIGNED USING 2,500 PSI):
1. ALL FOOTINGS, FOUNDATIONS, AND STEM WALLS F'C = 3,000 PSI
2. SLABS ON GRADE F'C = 3,500 PSI

B. MINIMUM CLEAR PROTECTION FOR REINFORCEMENT SHALL BE AS FOLLOWS:
1. PLACED DIRECTLY AGAINST EARTH 3"
2. FORMED SURFACES #5 BARS OR SMALLER 1-1/2"
3. STRUCTURAL SLABS 1"

C. SAWN CONTROL 4 CONSTRUCTION JOINTS SHALL BE MADE AS SOON AS POSSIBLE WITHOUT DAMAGE TO THE SURFACE. FILLING OF SAWN JOINTS WHERE REQUIRED SHALL BE DELAYED AS LONG AS POSSIBLE TO ALLOW MAXIMUM SHRINKAGE TO OCCUR IN SLABS.

D. ALL EMBEDDED ANCHOR BOLTS SHALL BE A36 OR A307 STEEL W/ 7" MIN. EMBEDMENT. ANCHOR BOLTS TO BE WITHIN 1'-0" OF SILL PLATE ENDS, WITH A MIN. OF TWO PER WALL AND NO CLOSER THAN 6" FROM CONCRETE WALL CORNERS. REFER TO LOG MANUFACTURER'S SPECIFIC BOLT PLAN FOR LOG WALL ANCHORS. DO NOT POUR FOUNDATION WITH OUT LOG MANUFACTURER'S BOLT PLAN.

E. WET SETTING OF REINFORCING BARS IN FOOTINGS AND WALLS IS NOT ALLOWED.

F. BLOCK-OUT ALL STEM WALLS @ ENTRIES AS REQUIRED.

G. CONCRETE FORM WORK TO BE OF ADEQUATE STRENGTH AND BRACED TO PREVENT DEFORMATION.

H. PROTECT ALL CONCRETE FROM FREEZING.

I. ALL LOWER LEVEL AND RETAINING WALLS WHICH HAVE FILL HIGHER THAN AN INTERIOR FLOOR LEVEL SHALL HAVE AN APPROVED WATERPROOFING MEMBRANE APPLIED.

J. PROVIDE ADEQUATE TEMPORARY BRACING OF CONCRETE AND/OR CMU RETAINING WALLS DURING BACKFILL PRIOR TO INSTALLATION OF MAIN FLOOR FRAMING AND BASEMENT CONCRETE SLAB ON GRADES. WALL DESIGNS ARE BASED ON TOP OF WALL RESTRAINED BY FINISHED FLOOR SYSTEM AND RESISTING SLIDING BY HAVING BASEMENT CONCRETE SLAB ON GRADE FLOOR INSTALLED.

K. IT IS RECOMMENDED THAT ALL GRADING, EXCAVATION, AND INSTALLATION OF FOUNDATIONS BE PERFORMED UNDER THE INSPECTION AND TESTING OF A QUALIFIED GEOTECHNICAL CONSULTANT DURING THE CRITICAL STAGES OF CONSTRUCTION.

L. STAIN 4 TEXTURE OF EXPOSED CONCRETE SURFACES PER OWNERS DIRECTION.

4. REINFORCING STEEL:

A. ASTM A615, GRADE 60. BARS TO BE WELDED SHALL BE ASTM A706, GRADE 60.

B. MINIMUM LENGTH OF LAPPED SPLICES SHALL BE 48 TIMES BAR DIAMETER UNLESS NOTED OTHERWISE. STAGGER SPLICES IN WALLS SO THAT NO TWO ADJACENT BARS ARE SPLICED IN THE SAME LOCATION.

C. WELDED WIRE FABRIC SHALL CONFORM TO ASTM A185, FY = 75,000 PSI.

D. REINFORCING SHALL BE CONTINUOUS THROUGH ALL COLD JOINTS.

E. PROVIDE CORNER BARS W/ 18" LEGS AT CORNERS AND INTERSECTING WALLS AND FOOTINGS, SIZE AND PLACEMENT TO MATCH HORIZONTAL REINFORCEMENT.

F. PROVIDE #4 HORIZONTALS AT TOP OF WALL, CONT. IN FOOTINGS, AND ABOVE ALL OPENINGS. PROVIDE #4 HORIZONTALS AT ALL INTERSECTING FLOORS AND ROOF LEVELS, BOTTOM OF ALL WINDOWS AND AT 12'-0" O.C. MAXIMUM OR PER PLANS.

G. PROVIDE #4 VERTICALS AT 24" O.C. W/ STANDARD HOOK EXTENDING INTO FOOTING AT EACH SIDE OF WALL OPENINGS AND AT EACH END OF WALLS.

H. PROVIDE FOUNDATION HOLDOWNS AT ALL SHEAR WALL LOCATIONS PER PLAN, IF APPLICABLE.

5. WOOD FRAMING:

A. STRUCTURAL LUMBER SHALL BE DOUGLAS FIR-LARCH (DF-L) #2 OR BETTER.

B. WOOD INSTALLED WITHIN 1" OF CONCRETE OR MASONRY SHALL BE REDWOOD OR PRESSURE TREATED.

C. PROVIDE WET USE ADHESIVES.

D. MAXIMUM LUMBER MOISTURE CONTENTS SHALL BE 15%.

E. ALL FRAMING DETAILS SHALL BE IN ACCORDANCE WITH THE ADOPTED CODE.

F. PROVIDE SOLID BLOCKING BELOW ALL BEARING WALLS AND POSTS. PROVIDE BLOCKING @ 24" O.C. @ JOISTS PARALLEL WITH BEARING WALLS ABOVE.

G. MINIMUM HEADER AT BEARING WALL TO BE 4X8 WITH 4X6 BEARING STUD PLUS KING STUD EACH SIDE. HEADERS WITH LARGER LOADING WILL BE CALLED OUT IN PLANS.

H. BLOCK AND NAIL ALL HORIZONTAL PANEL EDGES AT SHEAR WALLS.
1. ROOF SHEATHING - 19/32" CDX MIN. (32/16) SPAN RATING 10D @ 2 1/2" O.C. EDGE AND 12" O.C. FIELD U.N.O.
2. FLOOR SHEATHING: 3/4" CDX MIN. (48/24) SPAN RATING 10D @ 6" O.C. EDGE AND 12" O.C. FIELD U.N.O.
3. EXT. WALL SHEATHING: 15/32" CDX MIN. (24/0) SPAN RATING ALL SPAN RATINGS TO MEET LOCAL CODES.

I. ORIENTED STRAND BOARD (OSB) WITH THE SAME SPAN RATING MAY BE SUBSTITUTED.

J. ALL EXTERIOR WALLS TO BE 2X6 @ 16" O.C. AND AT INTERIOR NON-LOAD BEARING PARTITIONS TO BE 2X4 @ 16" O.C. STUD WALLS (U.N.O.)

K. 2X DIMENSIONAL STUDS ARE TO BE STANDARD (DF-L) #2 OR BETTER WESTERN WHITE WOODS (WWW).

L. PROVIDE STEEL STRAPS AT PIPES IN STUD WALLS AS REQUIRED BY THE ADOPTED CODE.

M. OVER-FRAMING SHALL BE DONE SUCH THAT VERTICAL LOADS ARE TRANSFERRED TO MAIN STRUCTURE BELOW BY DIRECT BEARING AT SPACING NOT TO EXCEED 24" O.C.

N. METAL HANGERS AND CONNECTIONS ARE 'SIMPSON' AND SHALL BE INSTALLED PER 'SIMPSON' RECOMMENDATIONS.

O. ENGINEERED 'I' JOISTS TO BE DESIGNED, CERTIFIED, ERECTED, INSTALLED, AND BRACED PER MANUFACTURER'S SPECS. ALL REFERENCES ON PLANS ARE FOR TRUS-JOIST, A WEYERHAEUSER BUSINESS PRODUCT. USE THESE PRODUCTS OR AN EQUIVALENT APPROVED MANUFACTURER.

P. SHEATHING SHALL BE APA RATED EXPOSURE 1

Q. STAGGER SHEATHING END JOINTS 4'-0"

R. PROVIDE 1/4" SPACE AT ALL PANEL EDGES FOR EXPANSION.

S. FRAME INTERIOR BEARING WALLS SHORT TO ACCOUNT FOR LOG SETTLING.

T. FRAME INTERIOR POSTS SHORT TO ACCOUNT FOR LOG SETTLING. USE REMOVABLE SHIMS OR SETTLING JACK AS NECESSARY.

U. ALL WINDOW SIZES ARE NOMINAL; VERIFY ACTUAL LOG OPENINGS WITH LOG 4 WINDOW MANUFACTURERS.

V. ALL MICROLLAM LVL'S SHALL HAVE THE MINIMUM SECTION PROPERTIES OF FB = 2900 PSI, FV = 285 PSI, E = 2,000,000 PSI.

W. ALL ROOF OPENINGS GREATER THAN 12"X12" SHALL BE FRAMED IN OPENINGS.

X. GLUE-LAM BEAMS SHALL BE DOUGLAS FIR COMBINATION 24F-V4 FOR SIMPLY SUPPORTED AND 24F-V8 FOR CANTILEVERED BEAMS, FB = 2400 PSI, FV = 165 PSI, E = 1,600,000 PSI. PROVIDE WET USE GLUE ON ALL EXTERIOR LOCATIONS.

6. STRUCTURAL STEEL:

A. BOLTS AND LAGS SHALL CONFORM TO ASTM A36 (U.N.O.)

B. STEEL TUBES TO CONFORM TO ASTM500, GRADE B (FY = 40KSI)

C. PROVIDE MILD STEEL PLATE WASHERS AT ALL BOLT HEADS AND NUTS BEARING AGAINST WOOD.

D. ALL WORK SHALL BE IN ACCORDANCE WITH THE 9TH EDITION, OR 1ST EDITION LRFD MANUAL OF AISC 'SPECIFICATIONS FOR THE DESIGN, FABRICATION AND ERECTION OF STRUCTURAL STEEL FOR BUILDINGS'

E. ALL WELDING SHALL BE PERFORMED PER AWS D1.1 WITH A MINIMUM WELD SIZE OF 3/16" AND WITH E70XX ELECTRODE.

F. MACHINE BOLTS SHALL BE ASTM A325 (U.N.O.)

G. PROVIDE LOCK WASHERS BETWEEN NUT AND CONNECTED STEEL.

H. ALL STEEL, INCLUDING NUTS, BOLTS, AND WASHERS EXPOSED TO WEATHER, SHALL BE GALVANIZED.

7. PRE-MANUFACTURED METAL PLATED TRUSSES:

A. PRE-MANUFACTURED TRUSS PROVIDER TO VERIFY ALL LOADING PATTERNS TO FOOTINGS BELOW.

B. PRE-MANUFACTURED TRUSS PROVIDER TO PROVIDE SUPPORT @ TRUSSES FOR LOADING SHOWN ON ALL PLANS, SECTIONS AND DETAILS. VERIFY SECOND FLOOR LOADING AND SPECIAL CASE POINT LOADING FROM LOG AND FRAMED ROOF SYSTEMS.

C. ALL PRE-MANUFACTURED ROOF TRUSSES SHALL BE DESIGNED FOR THE ROOF LOADS SHOWN AND ACCOUNT FOR ANY REQUIRED ADDITIONAL DRIFT, VALLEY, OR EAVE LOAD PER CODE. TRUSS SHOP DRAWINGS SHALL BE SUBMITTED TO THE ENGINEER OF RECORD (E.O.R.) FOR REVIEW AND COMPLIANCE.

8. GENERAL STRUCTURAL NOTES:

A. CONTRACTOR TO VERIFY ALL OPENINGS, BUILDING DIMENSIONS, COLUMN LOCATIONS AND DIMENSIONS WITH OWNER AND LOG MANUFACTURER PRIOR TO POURING OF ANY CONCRETE FOUNDATIONS OR CONSTRUCTION.

B. THE ENGINEER OF RECORD IS NOT RESPONSIBLE FOR ANY DEVIATIONS FROM THESE PLANS UNLESS SUCH CHANGES ARE AUTHORIZED IN WRITING TO THE ENGINEER OF RECORD.

C. THE CONTRACTOR IS RESPONSIBLE FOR PROVIDING SAFE AND ADEQUATE SHORING AND/OR TEMPORARY STRUCTURAL STABILITY FOR ALL PARTS OF THE STRUCTURE DURING CONSTRUCTION. THE STRUCTURE SHOWN ON THE DRAWINGS HAS BEEN DESIGNED FOR FINAL CONFIGURATION.

D. NOTCHING AND/OR CUTTING OF ANY STRUCTURAL MEMBER IN THE FIELD IS PROHIBITED, UNLESS PRIOR CONSENT IS GIVEN BY THE ENGINEER OF RECORD.

2018 INTERNATIONAL ENERGY CONSERVATION CODE (IECC)

THE PROPOSED BUILDING HAS BEEN DESIGNED TO MEET OR EXCEED THE REQUIREMENTS OF THE INTERNATIONAL ENERGY CONSERVATION CODE

TABLE R402.1.1 PRIZE (2)

INSULATION AND FENESTRATION REQUIREMENTS BY COMPONENT						
CLIMATE ZONE	WINDOW U-FACTOR	CEILING R-VALUE	WOOD FRAME WALL R-VALUE	FLOOR R-VALUE	SLAB R-VALUE	CRAWL SPACE WALL R-VALUE
6	.30	49	20 OR 13+5	30	10, 4FT	10/13





MAIN LEVEL	4689	sq. ft.
BASEMENT	2362	sq. ft.
TOTAL LIVING SPACE	7071	sq. ft.
UNFINISHED/MECH.	150	sq. ft.
GARAGE	2634	sq. ft.
COVD PORCH/DECK	2314	sq. ft.

SHEET INDEX

PAGE	TITLE
A1	COVER SHEET
A2	SITE PLAN
A3	LANDSCAPE PLAN - OVERVIEW
A4	LANDSCAPE PLAN - ENLARGED
A5	IRRIGATION PLAN
A6	FLOOR PLAN - 1ST LEVEL
A7	FLOOR PLAN - BASEMENT
A8	FOUNDATION
A9	DETAIL VIEWS
A10	FABRICATED COLUMN CAPS
A11	STEEL BEAM DETAILS
A12	STEEL BEAM DETAILS
A13	STEEL BEAM DETAILS
A14	WALL BRACING - 1ST LEVEL
A15	WALL BRACING - BASEMENT
A16	FLOOR LAYOUT - 1ST LEVEL
A17	ROOF LAYOUT - BASEMENT
A18	ROOF LAYOUT - 1ST LEVEL
A19	ROOF LAYOUT - OVERVIEW
A20	ELEVATIONS
A21	ELEVATIONS
A22	SECTION VIEWS
A23	SECTION VIEWS
A24	SECTION VIEWS
A25	SECTION VIEWS
A26	SECTION VIEWS
A27	SECTION VIEWS
E1	ELECTRICAL - 1ST LEVEL
E2	ELECTRICAL - BASEMENT

NOT FOR CONSTRUCTION

SCAN FOR RENDERINGS
SCAN FOR CURRENT PLAN
SCAN FOR 3D FRAMING MODEL
SCAN FOR ENGINEERED CALCS

LICENSED ARCHITECT
AR-985249
06.19.2026
JESSICA PETTY
STATE OF IDAHO

ENGINEER STAMP AREA

PROJECT NO.
25-017

LEGACY RANCH LOT #13
ADAMS CO., ID

CONTRACTOR TO VERIFY ALL DETAILS, DIMENSIONS, AND SPECIFICATIONS PRIOR TO CONSTRUCTION. ANY ERRORS, OMISSIONS, OR DISCREPANCIES SHALL BE REPORTED TO THE ARCHITECT BEFORE PROCEEDING WITH CONSTRUCTION OR ANYTIME THEREAFTER. FAILURE TO DO SO RELIEVES THE ARCHITECT OF ANY RESPONSIBILITY FOR RESULTING CONDITIONS AND HOLDS THE CONTRACTOR RESPONSIBLE FOR ALL COSTS, CORRECTIONS, AND LIABILITIES ARISING FROM ANY CLAIMS, LITIGATIONS OR SUITS THAT MAY ARISE DURING CONSTRUCTION.

COVER SHEET

DRAWN BY: Steve
INITIAL DATE: 11/19/2025
PRINT DATE: 11/17/2026
SHEET SIZE: ARCH E2 (36" x 54")

SMC Design
SMC Design
208.249.7288
Nampa, ID

SHEET NUMBER
A1
PAGE 1

PRELIM
NOT FOR CO



VICINITY MAP

SCAN FOR CURRENT PLAN

LICENSED ARCHITECT
AR-985249
06.19.2026
JESSICA PETTY
STATE OF IDAHO

COVERAGE:
LOT AREA = 234,845 SF
BUILDING FOOTPRINT = 5,421 SF
PATIOS & DECKS x 50% = 735 SF
DRIVEWAYS & WALKWAYS x 35% = 1,844 SF

TOTAL COVERAGE = 8,600 OR 4%
MINIMUM REQUIRED SNOW STORAGE = 1786 SF

SHEET INDEX

PAGE	TITLE
A1	COVER SHEET
A2	SITE PLAN
A3	LANDSCAPE PLAN - OVERVIEW
A4	LANDSCAPE PLAN - ENLARGED
A5	IRRIGATION PLAN
A6	FLOOR PLAN - 1ST LEVEL
A7	FLOOR PLAN - BASEMENT
A8	FOUNDATION
A9	DETAIL VIEWS
A10	FABRICATED COLUMN CAPS
A11	STEEL BEAM DETAILS
A12	STEEL BEAM DETAILS
A13	STEEL BEAM DETAILS
A14	WALL BRACING - 1ST LEVEL
A15	WALL BRACING - BASEMENT
A16	FLOOR LAYOUT - 1ST LEVEL
A17	ROOF LAYOUT - BASEMENT
A18	ROOF LAYOUT - 1ST LEVEL
A19	ROOF LAYOUT - OVERVIEW
A20	ELEVATIONS
A21	ELEVATIONS
A22	SECTION VIEWS
A23	SECTION VIEWS
A24	SECTION VIEWS
A25	SECTION VIEWS
A26	SECTION VIEWS
A27	SECTION VIEWS
E1	ELECTRICAL - 1ST LEVEL
E2	ELECTRICAL - BASEMENT

LEGACY RANCH - LOT 13
1 IN = 20 FT

NOT FOR CONSTRUCTION

PROJECT NO.
25-017

LEGACY RANCH LOT #13
ADAMS CO., ID

CONTRACTOR TO VERIFY ALL DETAILS, DIMENSIONS, AND SPECIFICATIONS PRIOR TO CONSTRUCTION AND REPORT ANY DISCREPANCIES TO THE ARCHITECT. THE ARCHITECT SHALL BE INDEMNIFIED AND HELD HARMLESS BY THE OWNER AND CONTRACTOR FROM ANY CLAIMS, LITIGATIONS OR SUITS THAT MAY ARISE DURING CONSTRUCTION OR ANYTIME THEREAFTER.

SHEET SIZE
ARCH E2 (36" x 54")

INITIAL DATE: 11/19/2025
PRINT DATE: 11/17/2026

DRAWN BY:
Steve

SITE PLAN

SMC Design
SMC Design
208.249.1286
Nampa, ID

SHEET NUMBER
A2
PAGE 2

PRELIMINARY
NOT FOR CONSTRUCTION



LEGACY RANCH - LOT 13
1 IN = 20 FT

PLANT SCHEDULE				
NUMBER	QTY	COMMON NAME	BOTANIC NAME	SIZE
PD1	4	QUAKING ASPEN	POPULUS TREMULOIDES	20 GALLON
PD2	40	BOOGER DOGWOOD	CORNUS STOLONIFERA	5 GALLON
PD3	41	SNOWBOUND SPIREA	SPIRAEA NIPPONICA	5 GALLON
PD4	31	GROWFAST FIR	DOUGLASTICUS HUNTERS	5 GALLON
PD5	3	SPRUCE - ENGELMANN SPRUCE	PICEA ENGELMANNII	5 GAL - TALL

SHEET INDEX

PAGE	TITLE
A1	COVER SHEET
A2	SITE PLAN
A3	LANDSCAPE PLAN - OVERVIEW
A4	LANDSCAPE PLAN - ENLARGED
A5	IRRIGATION PLAN
A6	FLOOR PLAN - 1ST LEVEL
A7	FLOOR PLAN - BASEMENT
A8	FOUNDATION
A9	DETAIL VIEWS
A10	FABRICATED COLUMN CAPS
A11	STEEL BEAM DETAILS
A12	STEEL BEAM DETAILS
A13	STEEL BEAM DETAILS
A14	WALL BRACING - 1ST LEVEL
A15	WALL BRACING - BASEMENT
A16	FLOOR LAYOUT - 1ST LEVEL
A17	ROOF LAYOUT - BASEMENT
A18	ROOF LAYOUT - 1ST LEVEL
A19	ROOF LAYOUT - OVERVIEW
A20	ELEVATIONS
A21	ELEVATIONS
A22	SECTION VIEWS
A23	SECTION VIEWS
A24	SECTION VIEWS
A25	SECTION VIEWS
A26	SECTION VIEWS
A27	SECTION VIEWS
E1	ELECTRICAL - 1ST LEVEL
E2	ELECTRICAL - BASEMENT

NOT FOR CONSTRUCTION

SCAN FOR CURRENT PLAN

LICENSED ARCHITECT
AR-985249
06.19.2026
JESSICA PETTY
STATE OF IDAHO

PROJECT NO.
25-017

CONTRACTOR TO VERIFY ALL DETAILS, DIMENSIONS, AND SPECIFICATIONS PRIOR CONSTRUCTION AND REPORT ANY DISCREPANCIES OR ERRORS TO ENGINEER OR PURCHASER OF THIS DESIGN AND/OR SET. FAILURE TO DO SO SHALL RELIEVE ENGINEER FROM ANY CLAIMS, LITIGATIONS OR SUITS THAT MAY ARISE DURING CONSTRUCTION OR ANYTIME THEREAFTER.

LEGACY RANCH LOT #13
ADAMS CO., ID

SHEET SIZE
ARCH E2 (36" x 54")

INITIAL DATE: 11/19/2025
PRINT DATE: 11/17/2026

DRAWN BY:
Steve

LANDSCAPE PLAN - OVERVIEW

SWC Design
SWC Design
208.244.1286
Nampa, ID

SHEET NUMBER
A3
PAGE 3

PRELIMINARY
NOT FOR CONSTRUCTION

SCAN FOR CURRENT PLAN



LEGACY RANCH - LOT 13
1/8 IN = 1 FT

PLANT SCHEDULE				
NUMBER	QTY	COMMON NAMES	SCIENTIFIC NAME	SIZE
PO1	4	QUAKING ASPEN	POPULUS TREMULOIDES	20 GALLON
CO1	40	KADOMSKI DOGWOOD	CORNUS SERICEA	5 GALLON
PO2	40	SNOWBERRY SPIREA	SPIRAEA BETULIFOLIA	5 GALLON
PO3	33	SNOWBERRY	SYMPHORICARPOS ALBUS	5 GALLON
PO5	15	SPRUCE - ENGELMANN "SPRUCE"	PICEA ENGELMANNII	7 @ 7' TALL

SHEET INDEX

PAGE	TITLE
A1	COVER SHEET
A2	SITE PLAN
A3	LANDSCAPE PLAN - OVERVIEW
A4	LANDSCAPE PLAN - ENLARGED
A5	IRRIGATION PLAN
A6	FLOOR PLAN - 1ST LEVEL
A7	FLOOR PLAN - BASEMENT
A8	FOUNDATION
A9	DETAIL VIEWS
A10	FABRICATED COLUMN CAPS
A11	STEEL BEAM DETAILS
A12	STEEL BEAM DETAILS
A13	STEEL BEAM DETAILS
A14	WALL BRACING - 1ST LEVEL
A15	WALL BRACING - BASEMENT
A16	FLOOR LAYOUT - 1ST LEVEL
A17	ROOF LAYOUT - BASEMENT
A18	ROOF LAYOUT - 1ST LEVEL
A19	ROOF LAYOUT - OVERVIEW
A20	ELEVATIONS
A21	ELEVATIONS
A22	SECTION VIEWS
A23	SECTION VIEWS
A24	SECTION VIEWS
A25	SECTION VIEWS
A26	SECTION VIEWS
A27	SECTION VIEWS
E1	ELECTRICAL - 1ST LEVEL
E2	ELECTRICAL - BASEMENT

PRELIMINARY
NOT FOR CONSTRUCTION

LICENSED ARCHITECT
AR-985249
06.19.2026
JESSICA PETTY
STATE OF IDAHO

PROJECT NO.
25-017

LEGACY RANCH LOT #13
ADAMS CO, ID

CONTRACTOR TO VERIFY ALL DETAILS, DIMENSIONS, AND SPECIFICATIONS PRIOR TO CONSTRUCTION AND REPORT ANY DISCREPANCIES, ERRORS, OR OMISSIONS TO SMC DESIGN. SMC DESIGN ASSUMES NO RESPONSIBILITY FOR ANY CONSTRUCTION PERFORMED FROM INCOMPLETE OR INCORRECT PLANS. CONTRACTOR AGREES TO INDEMNIFY AND HOLD HARMLESS SMC DESIGN FROM ANY CLAIMS, LITIGATIONS OR SUITS THAT MAY ARISE DURING CONSTRUCTION OR ANYTIME THEREAFTER.

DRAWN BY: Steve
INITIAL DATE: 11/19/2025
PRINT DATE: 11/17/2026
SHEET SIZE: ARCH E2 (36" x 54")

LANDSCAPE PLAN - ENLARGED

SMC Design
208.249.7288
Nampa, ID

SHEET NUMBER
A4
PAGE 4

PRELIMINARY
NOT FOR CONSTRUCTION

SCAN FOR CURRENT PLAN

S3° 7' 6"E
132.94'

S18° 9' 59"W
188.61'

RE-SEED W/ NATIVE GRASSES

5420

5418

5410

5404

LAWN

CONCRETE SIDEWALK

ASPHALT DRIVEWAY

RE-SEED W/ NATIVE GRASSES

250 SF SNOW STORAGE

700 SF SNOW STORAGE

900 SF SNOW STORAGE

RE-SEED W/ NATIVE GRASSES

RE-SEED W/ NATIVE GRASSES

RE-SEED W/ NATIVE GRASSES

SPRINKLER SCHEDULE		
	DESCRIPTION	QTY
B01	RAIN BIRD 5000 ROTOR TYPE HEAD	14
C01	1" ELOP BUSHING	11
S03	DRIP LINE	13

IRRIGATION SYSTEM WILL BE FULLY AUTOMATIC. PRESSURE AND BALLOTS FOR FREEZING, ETC. TO BE DETERMINED AT INSTALL DATE TO PROTECT SYSTEM FROM FREEZING.

BACK FLOW PREVENTION WILL BE INSTALLED, INSPECTED AND PERMITTED AS REQUIRED BY LOCAL CODES AND ORDINANCES.

HIGH WATER USE DRIVE VALVE WILL BE LOCATED AT WATER SERVICE LINE FOR IDENTIFICATION.

SHEET INDEX	
PAGE	TITLE
A1	COVER SHEET
A2	SITE PLAN
A3	LANDSCAPE PLAN - OVERVIEW
A4	LANDSCAPE PLAN - ENLARGED
A5	IRRIGATION PLAN
A6	FLOOR PLAN - 1ST LEVEL
A7	FLOOR PLAN - BASEMENT
A8	FOUNDATION
A9	DETAIL VIEWS
A10	FABRICATED COLUMN CAPS
A11	STEEL BEAM DETAILS
A12	STEEL BEAM DETAILS
A13	STEEL BEAM DETAILS
A14	WALL BRACING - 1ST LEVEL
A15	WALL BRACING - BASEMENT
A16	FLOOR LAYOUT - 1ST LEVEL
A17	ROOF LAYOUT - BASEMENT
A18	ROOF LAYOUT - 1ST LEVEL
A19	ROOF LAYOUT - OVERVIEW
A20	ELEVATIONS
A21	ELEVATIONS
A22	SECTION VIEWS
A23	SECTION VIEWS
A24	SECTION VIEWS
A25	SECTION VIEWS
A26	SECTION VIEWS
A27	SECTION VIEWS
E1	ELECTRICAL - 1ST LEVEL
E2	ELECTRICAL - BASEMENT

LEGACY RANCH - LOT 13
1/8 IN = 1 FT

PRELIMINARY
NOT FOR CONSTRUCTION

LICENSED ARCHITECT
AR-985249
06.19.2026
JESSICA PETTY
STATE OF IDAHO

PROJECT NO.
25-017

LEGACY RANCH LOT #13
ADAMS CO., ID

CONTRACTOR TO VERIFY ALL DETAILS, DIMENSIONS, AND SPECIFICATIONS PRIOR TO CONSTRUCTION AND REPORT ANY DISCREPANCIES TO SMC DESIGN. SMC DESIGN IS NOT RESPONSIBLE FOR ANY CLAIMS, LITIGATIONS OR SUITS THAT MAY ARISE DURING CONSTRUCTION OR ANYTIME THEREAFTER.

SHEET SIZE
ARCH E2 (36" x 54")

INITIAL DATE: 11/19/2025
PRINT DATE: 11/17/2026

DRAWN BY:
Steve

IRRIGATION PLAN

SMC Design
208.249.7288
Nampa, ID

SHEET NUMBER
A5
PAGE 5

PRELIMINARY
NOT FOR CONSTRUCTION

SCAN FOR RENDERINGS

SCAN FOR CURRENT PLAN

SCAN FOR ENGINEERED CALCS

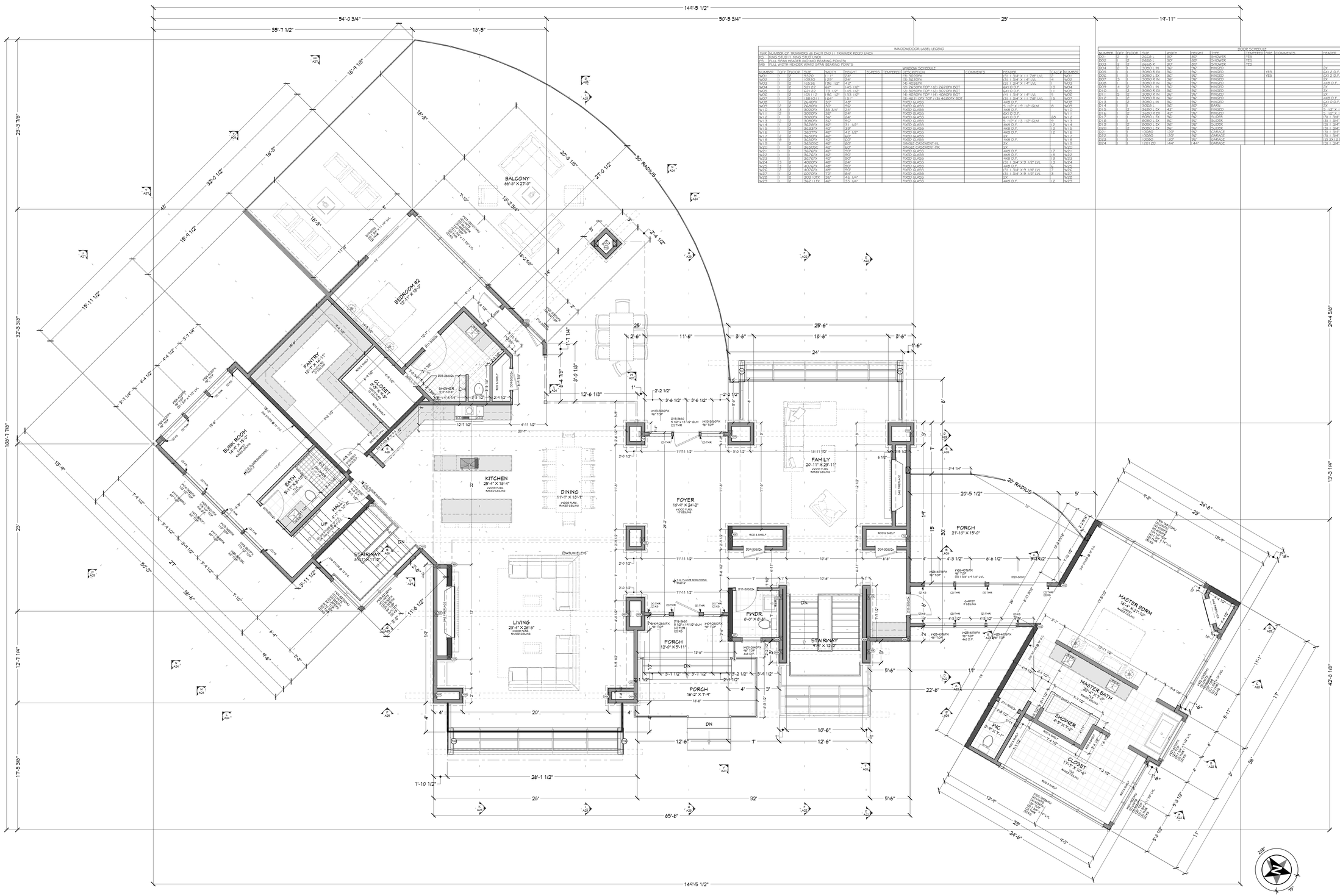

FLOOR PLAN - 1ST LEVEL
1/4 IN = 1 FT

WINDOW/DOOR LABEL LEGEND

TWR	NUMBER OF TRIMMERS @ EACH END (1 TRIMMER REQ'D UNO)
KS	KING STUD (1 KING STUD UNO)
FS	FULL SPAN HEADER (NO MID BEARING POINTS)
MS	FULL WIDTH HEADER W/MID SPAN BEARING POINTS

WINDOW SCHEDULE

NUMBER	QTY	FLOOR	TYP	WIDTH	HEIGHT	EGRESS	TEMPERED	DESCRIPTION	COMMENTS	HEADER	CALC #	NUMBER
W01	1	2	9320	1'-1"	2'-0"			(3) 3020FX		(3) 1 3/4" X 11 7/8" LVL	2	W01
W02	1	2	1DH3	1'-6"	3'-0"			(4) 4630FX		(3) 1 3/4" X 14" LVL	4	W02
W03	1	2	1DH3	1'-6"	4'-0"			(4) 4640FX		(3) 1 3/4" X 14" LVL	4	W03
W04	1	2	5412FX	5'-0"	4'-0"			(2) 2450FX TOP / (2) 2670FX BOT		(2)12 D.F.	10	W04
W05	1	2	5212FX	4'-11 1/2"	4'-0"			(2) 3050FX TOP / (2) 3070FX BOT		(2)12 D.F.	11	W05
W06	1	2	1E5 I 2	1'-6"	5'-1 1/2"			(4) 4930FX TOP / (4) 4090FX BOT		(4) 1 3/4" X 14" LVL	5	W06
W07	1	2	1JR (10:1)	1'-6"	5'-1"			(3) 4621 OPX TOP / (3) 4620FX BOT		(3) 1 3/4" X 11 7/8" LVL	15	W07
W08	1	2	2460FX	5'-0"	6'-8"			FIXED GLASS		4X6 D.F.		W08
W09	2	2	2460FX	5'-0"	5'-0"			FIXED GLASS		5 1/2" X 13 1/2" GLM	8	W09
W10	3	1	5020FX	5'-3 3/4"	2'-6"			FIXED GLASS		4X6 D.F.		W10
W11	1	1	5020FX	5'-3"	2'-6"			FIXED GLASS		4X6 D.F.		W11
W12	1	1	5020FX	5'-3"	2'-6"			FIXED GLASS		(2)12 D.F.	28	W12
W13	2	2	5060FX	5'-3"	5'-0"			FIXED GLASS		5 1/2" X 13 1/2" GLM	9	W13
W14	1	2	5620FX	4'-2"	1'-11 1/2"			FIXED GLASS		4X6 D.F.	12	W14
W15	1	2	5633FX	4'-2"	3'-9"			FIXED GLASS		4X6 D.F.	12	W15
W16	1	2	5637FX	4'-2"	4'-2 1/2"			FIXED GLASS		4X6 D.F.	12	W16
W17	2	2	5650FX	4'-2"	5'-0"			FIXED GLASS		2X		W17
W18	2	1	5650FX	4'-2"	5'-0"			FIXED GLASS		4X6 D.F.		W18
W19	1	2	5650SC	4'-2"	5'-0"			SINGLE CASEMENT-PL		2X		W19
W20	1	2	5650SC	4'-2"	5'-0"			SINGLE CASEMENT-HR		2X		W20
W21	1	1	3675FX	4'-2"	7'-5"			FIXED GLASS		4X6 D.F.	17	W21
W22	1	1	3675FX	4'-2"	7'-5"			FIXED GLASS		4X6 D.F.	18	W22
W23	1	1	3675FX	4'-2"	7'-5"			FIXED GLASS		4X6 D.F.	19	W23
W24	3	2	4020FX	4'-8"	2'-6"			FIXED GLASS		(3) 1 3/4" X 9 1/2" LVL	13	W24
W25	3	2	4070FX	4'-8"	7'-5"			FIXED GLASS		4X6 D.F.	6	W25
W26	2	2	4076FX	4'-8"	7'-5"			FIXED GLASS		(3) 1 3/4" X 9 1/8" LVL	7	W26
W27	1	2	4070FX	4'-8"	7'-5"			FIXED GLASS		(3) 1 3/4" X 9 1/8" LVL	3	W27
W28	1	2	5C3011FX	4'-2"	4'-11 1/4"			FIXED GLASS		4X6 D.F.	12	W28
W29	1	2	3621 I FX	4'-2"	5'-11 1/4"			FIXED GLASS		4X6 D.F.	12	W29

DOOR SCHEDULE

NUMBER	QTY	FLOOR	SIZE	WIDTH	HEIGHT	TYPE	TEMPERED	FIRE	COMMENTS	HEADER	CALC #	NUMBER
D01	1	1	2668 L	30"	80"	SHOWER	YES					D01
D02	1	2	2668 L	30"	80"	SHOWER	YES					D02
D03	2	2	2668 R	30"	80"	SHOWER	YES					D03
D04	2	1	3080 I. IN	36"	96"	MINGED				2X		D04
D05	1	1	3080 R. EX	36"	96"	MINGED	YES			6X12 D.F.	22	D05
D06	1	1	3080 L. EX	36"	96"	MINGED	YES			6X12 D.F.	23	D06
D07	1	1	3080 L. IN	36"	96"	MINGED				2X		D07
D08	1	1	3080 R. IN	36"	96"	MINGED				4X6 D.F.	1E	D08
D09	4	2	3080 L. IN	36"	96"	MINGED				2X		D09
D10	1	2	3080 R. EX	36"	96"	MINGED				2X		D10
D11	5	2	3080 R. IN	36"	96"	MINGED				2X		D11
D12	1	2	3080 R. IN	36"	96"	MINGED				4X6 D.F.		D12
D13	1	2	3080 L. IN	36"	96"	MINGED				6X12 D.F.		D13
D14	1	1	3080 L. IN	36"	96"	BARN				2X		D14
D15	1	2	2680 R FX	30"	96"	MINGED				5 1/2" X 13 1/2" GLM	9	D15
D16	1	2	2680 R FX	30"	96"	MINGED				5 1/2" X 13 1/2" GLM	8	D16
D17	1	1	2080 L FX	26"	96"	SLIDER				(3) 1 3/4" X 11 7/8" LVL	20	D17
D18	1	1	2080 L FX	26"	96"	SLIDER				(3) 1 3/4" X 11 7/8" LVL	21	D18
D19	1	2	2080 L EX	26"	96"	SLIDER				(3) 1 3/4" X 11 1/4" LVL	14	D19
D20	1	2	2080 L EX	26"	96"	SLIDER				(3) 1 3/4" X 9 1/4" LVL	7	D20
D21	1	1	10080	120"	92"	GARAGE				(3) 1 3/4" X 11 7/8" LVL	25	D21
D22	1	1	10080	120"	92"	GARAGE				(3) 1 3/4" X 14" LVL	26	D22
D23	1	1	10080	120"	92"	GARAGE				(2) 2X12 D.F.	27	D23
D24	1	1	12012120	144"	144"	GARAGE				(13) 1 3/4" X 11 1/4" LVL	124	D24

MAIN LEVEL	4689	sq. ft.
BASEMENT	2382	sq. ft.
TOTAL LIVING SPACE	7011	sq. ft.
UNFINISHED/MECH.	150	sq. ft.
GARAGE	2634	sq. ft.
COVD PORCH/DECK	2314	sq. ft.

MAIN LEVEL NOTES:
ALL ANGLE 45° UNO
2x6 EXT. WALLS @ 16" O.C. (U.N.O.
10'-1 1/8" PLATE HEIGHT UNO
ALL PARTITION DIMENSIONS
ARE TO FACE OF STUD

SHEET INDEX

PAGE	TITLE
A1	COVER SHEET
A2	SITE PLAN
A3	LANDSCAPE PLAN - OVERVIEW
A4	LANDSCAPE PLAN - ENLARGED
A5	IRRIGATION PLAN
A6	FLOOR PLAN - 1ST LEVEL
A7	FLOOR PLAN - BASEMENT
A8	FOUNDATION
A9	DETAIL VIEWS
A10	FABRICATED COLUMN CAPS
A11	STEEL BEAM DETAILS
A12	STEEL BEAM DETAILS
A13	STEEL BEAM DETAILS
A14	WALL BRACING - 1ST LEVEL
A15	WALL BRACING - BASEMENT
A16	FLOOR LAYOUT - 1ST LEVEL
A17	ROOF LAYOUT - BASEMENT
A18	ROOF LAYOUT - 1ST LEVEL
A19	ROOF LAYOUT - OVERVIEW
A20	ELEVATIONS
A21	ELEVATIONS
A22	SECTION VIEWS
A23	SECTION VIEWS
A24	SECTION VIEWS
A25	SECTION VIEWS
A26	SECTION VIEWS
A27	SECTION VIEWS
E1	ELECTRICAL - 1ST LEVEL
E2	ELECTRICAL - BASEMENT

LICENSED ARCHITECT
AR-985249
06.19.2026
JESSICA PETTY
STATE OF IDAHO

ENGINEER STAMP AREA

PROJECT NO.
25-017

LEGACY RANCH LOT #13
ADAMS CO., ID

CONTRACTOR TO VERIFY ALL DETAILS, DIMENSIONS, AND SPECIFICATIONS PRIOR TO CONSTRUCTION AND REPORT ANY DISCREPANCIES TO SMC DESIGN. SMC DESIGN IS NOT RESPONSIBLE FOR CONSTRUCTION OR ANYTIME THEREAFTER. CONTRACTOR SHALL INDEMNIFY SMC DESIGN FROM ANY CLAIMS, LITIGATIONS OR SUITS THAT MAY ARISE DURING CONSTRUCTION.

FLOOR PLAN - 1ST LEVEL

SHEET SIZE: ARCH E2 (36" x 54")

INITIAL DATE: 11/19/2025
PRINT DATE: 11/17/2026

DRAWN BY: Steve

SMC Design
208.249.1288
Nampa, ID

SHEET NUMBER
A6
PAGE 6

PRELIMINARY
NOT FOR CONSTRUCTION

PRELIMINARY
NOT FOR CONSTRUCTION

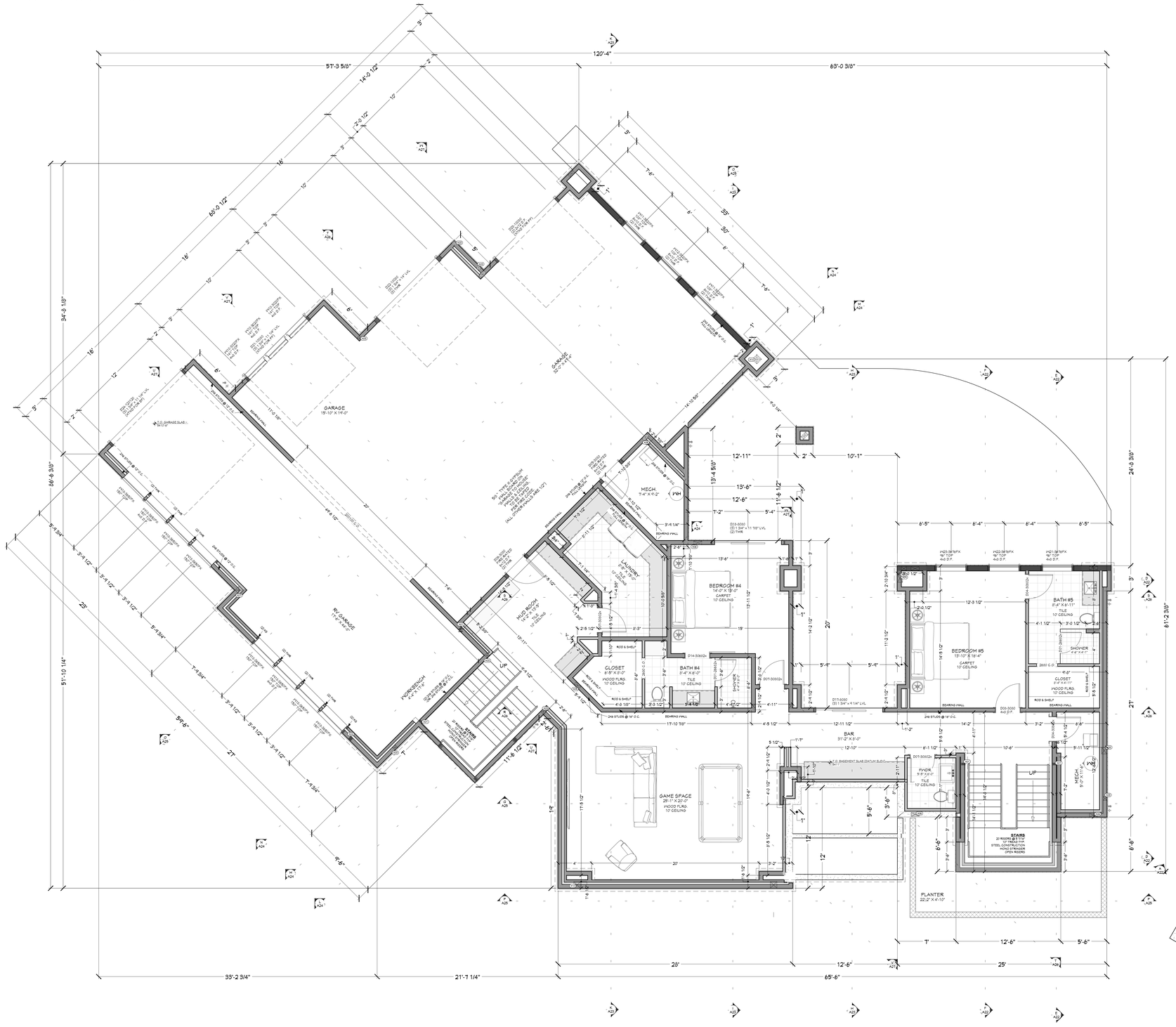

FLOOR PLAN - BASEMENT
1/4 IN = 1 FT

SCAN FOR RENDERINGS

SCAN FOR CURRENT PLAN

SCAN FOR ENGINEERED CALCS

DOOR SCHEDULE

NUMBER	QTY.	FLOOR	SIZE	WIDTH	HEIGHT	TYP.	TEMPERED	FIRE	COMMENTS	HEADER	CALC #	NUMBER
D01	2	1	2868 L	32"	80"	SHOWER	YES					D01
D02	1	2	2868 L	30"	80"	SHOWER	YES					D02
D03	1	2	2868 L	30"	80"	SHOWER	YES					D03
D04	2	1	3080 L IN	32"	96"	HINGED				2X		D04
D05	1	1	3080 R EX	96"	96"	HINGED	YES			6X12 D.F.	22	D05
D06	1	1	3080 L EX	32"	96"	HINGED	YES			6X12 D.F.	23	D06
D07	3	1	3080 R IN	32"	96"	HINGED				2X		D07
D08	1	1	3080 R IN	32"	96"	HINGED				4X8 D.F.	6	D08
D09	4	2	3080 L IN	32"	96"	HINGED				2X		D09
D10	1	2	3080 R EX	32"	96"	HINGED				2X		D10
D11	5	2	3080 L IN	32"	96"	HINGED				2X		D11
D12	1	2	3080 R IN	96"	96"	HINGED				4X8 D.F.		D12
D13	2	2	3080 L IN	32"	96"	HINGED				6X10 D.F.		D13
D14	1	1	3068 L	32"	80"	BARN				2X		D14
D15	1	2	3680 L EX	42"	96"	HINGED				5 1/2" X 13 1/2" GLM	9	D15
D16	1	2	3680 R EX	42"	96"	HINGED				5 1/2" X 19 1/2" GLM	8	D16
D17	1	1	8068 L EX	96"	96"	SLIDER				(3) 1 3/4" X 9 1/4" LVL	20	D17
D18	1	1	8068 L EX	96"	96"	SLIDER				(3) 1 3/4" X 11 7/8" LVL	21	D18
D19	1	2	8068 L EX	96"	96"	SLIDER				(3) 1 3/4" X 14" LVL	19	D19
D20	1	2	8068 L EX	96"	96"	SLIDER				(3) 1 3/4" X 9 1/4" LVL	17	D20
D21	1	2	10068 L	120"	96"	GARAGE				(3) 1 3/4" X 11 7/8" LVL	26	D21
D22	1	1	10080	120"	96"	GARAGE				(3) 1 3/4" X 14" LVL	25	D22
D23	1	1	10080	120"	96"	GARAGE				(2) 2X12 D.F.	27	D23
D24	1	1	20120	144"	144"	GARAGE				(3) 1 3/4" X 11 7/8" LVL	24	D24

WINDOW/DOOR LABEL LEGEND

TNR: NUMBER OF TRIMMERS @ EACH END (1 TRIMMER RSZD UNO)
KS: KING STUD (1 KING STUD UNO)
FS: FULL SPAN HEADER (NO MID BEARING POINTS)
MN: FULL WIDTH HEADER (MAKE SPAN BEARING POINTS)

WINDOW SCHEDULE

NUMBER	QTY.	FLOOR	SIZE	WIDTH	HEIGHT	EGRESS	TEMPERED	DESCRIPTION	COMMENTS	HEADER	CALC #	NUMBER
W01	1	2	5320	1' 11"	2'-8"			(2) 2030FX		(2) 1 3/4" X 11 7/8" LVL	12	W01
W02	1	2	10930	129"	2'-8"			(3) 3620FX		(3) 1 3/4" X 14" LVL	4	W02
W03	1	2	5636	5'-11 1/2"	4'-3"			(4) 4030FX		(3) 1 3/4" X 14" LVL	5	W03
W04	1	2	52122	62"	1'-4 1/2"			(2) 2650FX TOP / (2) 2670FX BOT		6X10 D.F.	10	W04
W05	1	2	62182	73 1/2"	1'-8 1/2"			(2) 3050FX TOP / (2) 3070FX BOT		6X10 D.F.	11	W05
W06	1	2	183107	216 1/2"	2'-3 1/2"			(4) 4030FX TOP / (4) 4080FX BOT		(4) 1 3/4" X 14" LVL	5	W06
W07	1	2	124124	147"	3'-0"			(4) 3050FX TOP / (4) 3080FX BOT		(4) 1 3/4" X 11 7/8" LVL	7	W07
W08	1	2	2640FX	30"	48"			FIXED GLASS		4X8 D.F.		W08
W09	2	2	2680FX	30"	96"			FIXED GLASS		5 1/2" X 19 1/2" GLM	8	W09
W10	3	1	3030FX	35 3/4"	24"			FIXED GLASS		4X8 D.F.		W10
W11	2	1	3030FX	36"	24"			FIXED GLASS		6X10 D.F.		W11
W12	1	1	3040FX	36"	48"			FIXED GLASS		6X10 D.F.	26	W12
W13	2	2	3080FX	36"	96"			FIXED GLASS		5 1/2" X 13 1/2" GLM	9	W13
W14	1	2	3636FX	42"	42 1/2"			FIXED GLASS		4X8 D.F.	12	W14
W15	1	2	3648FX	42"	54"			FIXED GLASS		4X8 D.F.	12	W15
W16	1	2	3637FX	42"	42 1/2"			FIXED GLASS		4X8 D.F.	12	W16
W17	2	2	3660FX	42"	60"			FIXED GLASS		2X		W17
W18	8	1	3650FX	42"	60"			FIXED GLASS		4X8 D.F.		W18
W19	1	2	3630SC	42"	60"			SINGLE CASEMENT-HL		2X		W19
W20	1	2	3630SC	42"	60"			SINGLE CASEMENT-HR		2X		W20
W21	1	1	3676FX	42"	90"			FIXED GLASS		4X8 D.F.	17	W21
W22	1	1	3676FX	42"	90"			FIXED GLASS		4X8 D.F.	18	W22
W23	1	1	3676FX	42"	90"			FIXED GLASS		4X8 D.F.	15	W23
W24	3	2	4030FX	48"	24"			FIXED GLASS		(3) 1 3/4" X 9 1/2" LVL	13	W24
W25	3	2	4076FX	48"	90"			FIXED GLASS		4X8 D.F.	6	W25
W26	2	2	4076FX	48"	90"			FIXED GLASS		(3) 1 3/4" X 9 1/4" LVL	17	W26
W27	1	2	6072DFX	72"	84"			FIXED GLASS		(3) 1 3/4" X 9 1/2" LVL	3	W27
W28	1	2	3031DFX	36"	46 1/4"			FIXED GLASS		2X		W28
W29	11	2	3621TFX	42"	55 1/4"			FIXED GLASS		4X6 D.F.	12	W29

MAIN LEVEL 4689 sq. ft.
BASEMENT 2382 sq. ft.
TOTAL LIVING SPACE 7071 sq. ft.

UNFINISHED/MECH. 150 sq. ft.
GARAGE 2634 sq. ft.
COVD PORCH/DECK 2314 sq. ft.

SHEET INDEX

PAGE	TITLE
A1	COVER SHEET
A2	SITE PLAN
A3	LANDSCAPE PLAN - OVERVIEW
A4	LANDSCAPE PLAN - ENLARGED
A5	IRRIGATION PLAN
A6	FLOOR PLAN - 1ST LEVEL
A7	FLOOR PLAN - BASEMENT
A8	FOUNDATION
A9	DETAIL VIEWS
A10	FABRICATED COLUMN CAPS
A11	STEEL BEAM DETAILS
A12	STEEL BEAM DETAILS
A13	STEEL BEAM DETAILS
A14	WALL BRACING - 1ST LEVEL
A15	WALL BRACING - BASEMENT
A16	FLOOR LAYOUT - 1ST LEVEL
A17	ROOF LAYOUT - BASEMENT
A18	ROOF LAYOUT - 1ST LEVEL
A19	ROOF LAYOUT - OVERVIEW
A20	ELEVATIONS
A21	ELEVATIONS
A22	SECTION VIEWS
A23	SECTION VIEWS
A24	SECTION VIEWS
A25	SECTION VIEWS
A26	SECTION VIEWS
A27	SECTION VIEWS
E1	ELECTRICAL - 1ST LEVEL
E2	ELECTRICAL - BASEMENT

LICENSED ARCHITECT
AR-985249
06.19.2026
JESSICA PETTY
STATE OF IDAHO

ENGINEER STAMP AREA

PROJECT NO.
25-017

LEGACY RANCH LOT #13
ADAMS CO., ID

SHEET SIZE
ARCH E2 (36" x 54")

INITIAL DATE: 11/19/2025
PRINT DATE: 11/17/2026

DRAWN BY:
Steve

SMC Design
SMC Design
209.249.1288
Nampa, ID

SHEET NUMBER
A7
PAGE 7

FLOOR PLAN - BASEMENT

THESE PLANS ARE THE PROPERTY OF SMC DESIGN AND ARE NOT TO BE USED IN ANY WAY WITHOUT THE EXPRESSED WRITTEN CONSENT OF SMC DESIGN. THESE PLANS ARE PROTECTED BY COPYRIGHT LAWS. ALL RIGHTS RESERVED. © 2025 SMC DESIGN

CONTRACTOR TO VERIFY ALL DETAILS, DIMENSIONS, AND SPECIFICATIONS PRIOR TO CONSTRUCTION AND REPORT ANY DISCREPANCIES TO SMC DESIGN. SMC DESIGN SHALL BE HELD HARMLESS AND UNDER NO OBLIGATION OR LIABILITY FOR ANY DEFECTS IN CONSTRUCTION OR ANYTIME THEREAFTER. CONTRACTOR SHALL INDEMNIFY AND HOLD HARMLESS SMC DESIGN FROM ANY CLAIMS, LITIGATIONS OR SUITS THAT MAY ARISE DURING CONSTRUCTION OR AFTER.

NOT FOR CONSTRUCTION

PRELIMINARY
NOT FOR CONSTRUCTION


GARAGE FLOOR
(6 BAG, 4000 PSI)
4" CONCRETE SLAB
ON 4" GRAVEL BASE
ON COMPACT EARTH
SLOPE 1/8" PER FT TO DRAIN
(2) 1/2" ANCHOR BOLTS MIN.
4" CONC. SLAB ON GRADE OVER GRAVEL
4" CONCRETE SLAB BASEMENT FLOOR ON COMPACTED GRAVEL
4" CONCRETE SLAB BASEMENT FLOOR ON COMPACTED GRAVEL OVER CONCRETE WALL
4" CONCRETE SLAB BASEMENT FLOOR ON COMPACTED GRAVEL
4" CONC. SLAB ON GRADE OVER GRAVEL
4" CONC. SLAB ON COMPACTED GRAVEL
12" EXPANSIVE SOIL REMOVAL
(6) 1/2" ANCHOR BOLTS MIN.
(2) 1/2" ANCHOR BOLTS MIN.
2" EXTRUDED POLYSTYRENE INSULATION
12" EXPANSIVE SOIL REMOVAL
DOUBLE 2X6 TOP PLATE
2X6 STUD WALL @ 16" O.C.
2X6 SILL PLATE
2" EXTRUDED POLYSTYRENE INSULATION
12" EXPANSIVE SOIL REMOVAL

PRELIMINARY
NOT FOR CONSTRUCTION

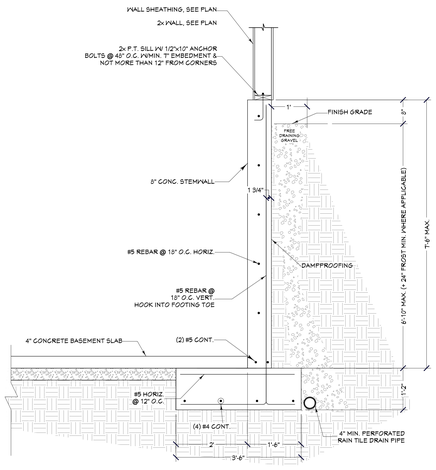

F1 CANTILEVERED FOUNDATION DETAIL
3/4 IN = 1 FT

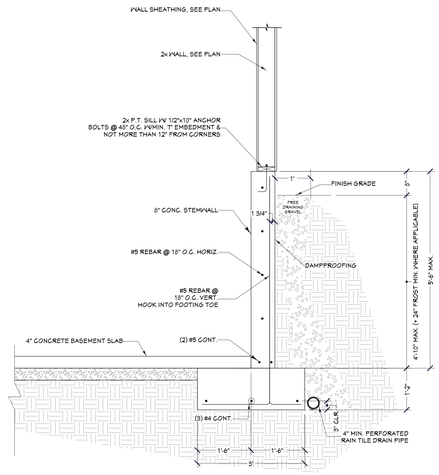

F2 CANTILEVERED FOUNDATION DETAIL
3/4 IN = 1 FT

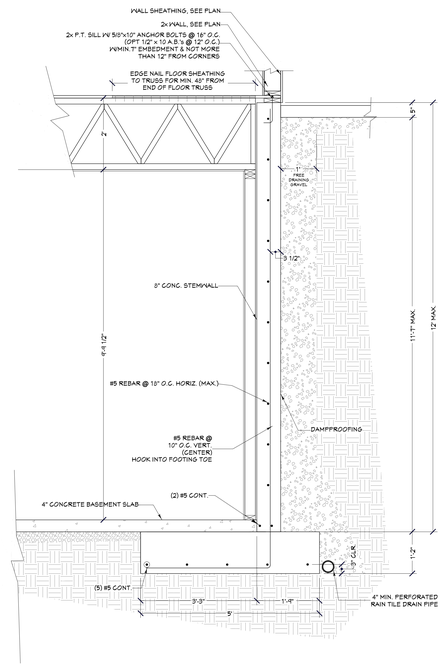

F3 RESTRAINED FOUNDATION DETAIL
3/4 IN = 1 FT

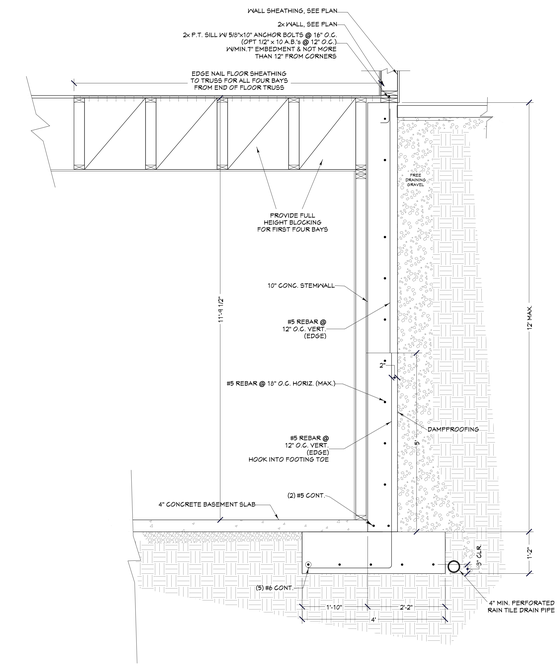

F4 RESTRAINED FOUNDATION DETAIL
3/4 IN = 1 FT

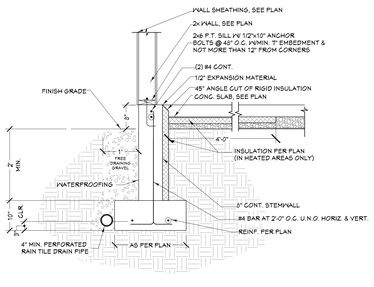

F5 FOUNDATION @ WALKOUT BASMENT DETAIL
3/4 IN = 1 FT

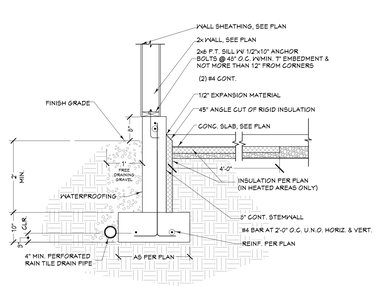

F6 FOUNDATION @ GARAGE DETAIL
3/4 IN = 1 FT

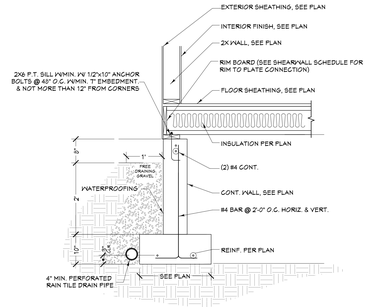

F7 FOUNDATION @ CRAWL SPACE DETAIL
3/4 IN = 1 FT

MULTIPLE-MEMBER CONNECTIONS FOR WALL STUDS

STUD SIZE	2-Ply (NAIL FROM ONE SIDE)			3-Ply (NAIL ONE SIDE, OFFSET NAILS BY 2" FROM THE PLY BELOW)			>= 4-Ply (NAIL ONE SIDE, OFFSET NAILS BY 2" FROM THE PLY BELOW)		
	ROWS	FASTENER	SPACING	ROWS	FASTENER	SPACING	ROWS	FASTENER	SPACING
2x4	2	16d	12" O.C. STAGGERED	2	16d	12" O.C. STAGGERED	2	16d	12" O.C. STAGGERED
2x6				3			3		
2x8				3			3		

NOTES:
- ALL 16d NAILS TO BE 0.131"x3"

MULTI STUDS DETAIL
NTS

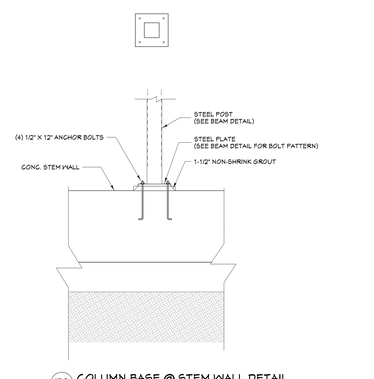

F8 COLUMN BASE @ STEM WALL DETAIL
3/4 IN = 1 FT

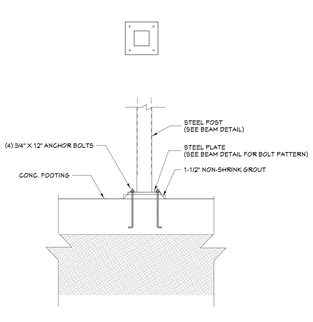

F9 COLUMN BASE 3/4" BOLTS DETAIL
3/4 IN = 1 FT

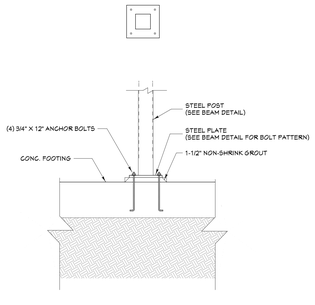

F10 COLUMN BASE 1/2" BOLTS DETAIL
3/4 IN = 1 FT

MULTIPLE-MEMBER CONNECTIONS LVL BEAMS

FASTENER TYPE	FASTENER SPACING	2-Ply	3-Ply NAILS	3-Ply SCREW	4-Ply SCREW	4-Ply BOLTS
10d (0.128"x3" OR (0.131"x3" NAIL (PER PLY)	12" O.C.	1/4" MAX TYP	1/4" MAX TYP	1/4" MAX TYP	1/4" MAX TYP	1/4" MAX TYP
½"Ø A307 THRU BOLT (PER BEAM)	16" O.C.	2 1/2"	2 1/2"	2 1/2"	2 1/2"	2 1/2"
¼" SDS SCREWS (PER BEAM)	16" O.C.	20" O.C.	20" O.C.	4" O.C.	4" O.C.	20" O.C.
		2" NAIL	NAIL	40" LONG SDS SCREWS	6" LONG SDS SCREWS	BOLT

8 SD1.1 MULTIPLE PLY BEAM CONNECTION DETAIL
SCALE: 3/4" = 1'-0"

MULTI LVL BEAMS DETAIL
NTS

SHEET INDEX

PAGE	TITLE
A1	COVER SHEET
A2	SITE PLAN
A3	LANDSCAPE PLAN - OVERVIEW
A4	LANDSCAPE PLAN - ENLARGED
A5	IRRIGATION PLAN
A6	FLOOR PLAN - 1ST LEVEL
A7	FLOOR PLAN - BASEMENT
A8	FOUNDATION
A9	DETAIL VIEWS
A10	FABRICATED COLUMN CAPS
A11	STEEL BEAM DETAILS
A12	STEEL BEAM DETAILS
A13	STEEL BEAM DETAILS
A14	WALL BRACING - 1ST LEVEL
A15	WALL BRACING - BASEMENT
A16	FLOOR LAYOUT - 1ST LEVEL
A17	ROOF LAYOUT - BASEMENT
A18	ROOF LAYOUT - 1ST LEVEL
A19	ROOF LAYOUT - OVERVIEW
A20	ELEVATIONS
A21	ELEVATIONS
A22	SECTION VIEWS
A23	SECTION VIEWS
A24	SECTION VIEWS
A25	SECTION VIEWS
A26	SECTION VIEWS
A27	SECTION VIEWS
E1	ELECTRICAL - 1ST LEVEL
E2	ELECTRICAL - BASEMENT

NOT FOR CONSTRUCTION

SCAN FOR CURRENT PLAN

SCAN FOR ENGINEERED CALCS

ENGINEER STAMP AREA

PROJECT NO.
25-017

CONTRACTOR TO VERIFY ALL DETAILS, DIMENSIONS, AND SPECIFICATIONS PRIOR TO CONSTRUCTION. ANY DISCREPANCIES OR OMISSIONS MUST BE REPORTED TO THE DESIGNER IMMEDIATELY. CONSTRUCTION BASED ON INCORRECT OR INCOMPLETE INFORMATION IS DONE AT THE CONTRACTOR'S OWN RISK. THE DESIGNER SHALL NOT BE HELD RESPONSIBLE FOR ANY ERRORS, OMISSIONS, OR RESULTING CONSTRUCTION ISSUES. THE CONTRACTOR SHALL INDEMNIFY AND HOLD HARMLESS THE DESIGNER FROM ANY CLAIMS, LITIGATIONS OR SUITS THAT MAY ARISE DURING CONSTRUCTION OR ANYTIME THEREAFTER.

LEGACY RANCH LOT #13
ADAMS CO., ID

SHEET SIZE: ARCH E2 (36" x 54")
INITIAL DATE: 11/19/2025
PRINT DATE: 11/17/2026
DRAWN BY: Steve

DETAIL VIEWS

SWC Design
SWC Design
208.249.7268
Nampa, ID

SHEET NUMBER
A9
PAGE 9

NC

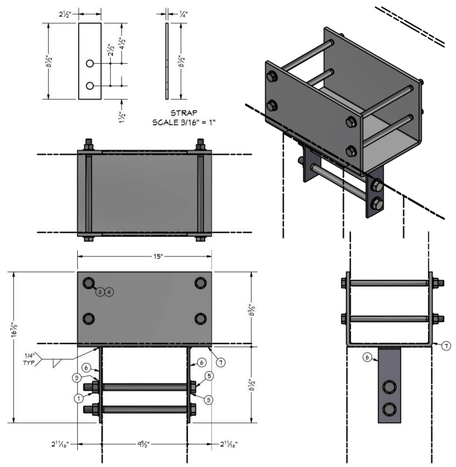

BEAM 16-1 POST CAP DETAIL

PARTS LIST			
ITEM	QTY	PART NUMBER	DESCRIPTION
1	2	ANSI B18.2.2 - 3/4 - 10, HNI	Hex Nuts (Inch Series) Hex Nut
2	4	ANSI B18.2.2 - 5/8 - 11, HNI	Hex Nuts (Inch Series) Hex Nut
3	4	ANSI B18.22.1 - 3/4 - narrow - Type A	Plain Washer (Inch)Type A and B
4	8	ANSI B18.22.1 - 5/8 - narrow - Type B	Plain Washer (Inch)Type A and B
5	2	ANSI/ASME B18.2.1 - 3/4-10 UNC - 12, HBI	Hex Bolt - UNC (Regular Thread - Inch)
6	2	GC STRAP	
7	1	SADDLE	
8	4	ANSI/ASME B18.2.1 - 5/8-11 UNC - 11, HBI	Hex Bolt - UNC (Regular Thread - Inch)

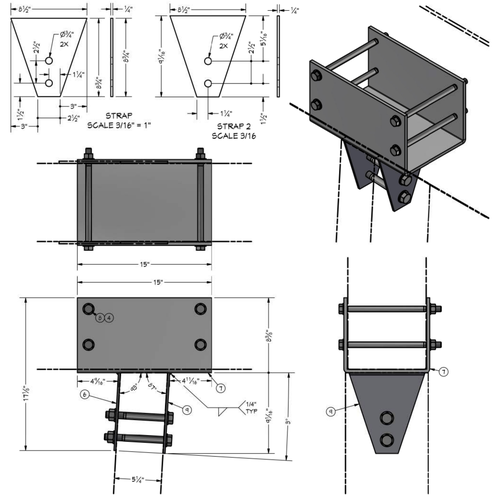

BEAM 17-2 POST CAP DETAIL

PARTS LIST			
ITEM	QTY	PART NUMBER	DESCRIPTION
1	2	ANSI B18.2.2 - 3/4 - 10, HNI	Hex Nuts (Inch Series) Hex Nut
2	4	ANSI B18.2.2 - 5/8 - 11, HNI	Hex Nuts (Inch Series) Hex Nut
3	4	ANSI B18.22.1 - 3/4 - narrow - Type A	Plain Washer (Inch)Type A and B
4	8	ANSI B18.22.1 - 5/8 - narrow - Type B	Plain Washer (Inch)Type A and B
5	2	ANSI/ASME B18.2.1 - 3/4-10 UNC - 12, HBI	Hex Bolt - UNC (Regular Thread - Inch)
6	1	GC STRAP	
7	1	SADDLE	
8	4	ANSI/ASME B18.2.1 - 5/8-11 UNC - 11, HBI	Hex Bolt - UNC (Regular Thread - Inch)
9	1	25-01T Strap-2	

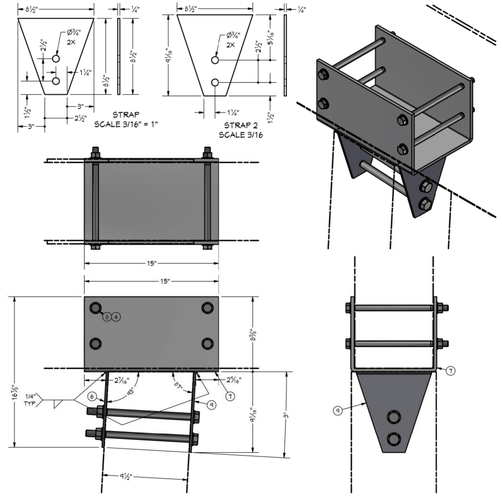

BEAM 17-3 POST CAP DETAIL

PARTS LIST			
ITEM	QTY	PART NUMBER	DESCRIPTION
1	2	ANSI B18.2.2 - 3/4 - 10, HNI	Hex Nuts (Inch Series) Hex Nut
2	4	ANSI B18.2.2 - 5/8 - 11, HNI	Hex Nuts (Inch Series) Hex Nut
3	4	ANSI B18.22.1 - 3/4 - narrow - Type A	Plain Washer (Inch)Type A and B
4	8	ANSI B18.22.1 - 5/8 - narrow - Type B	Plain Washer (Inch)Type A and B
5	2	ANSI/ASME B18.2.1 - 3/4-10 UNC - 12, HBI	Hex Bolt - UNC (Regular Thread - Inch)
6	1	GC STRAP	
7	1	SADDLE	
8	4	ANSI/ASME B18.2.1 - 5/8-11 UNC - 11, HBI	Hex Bolt - UNC (Regular Thread - Inch)
9	1	25-01T Strap-2	

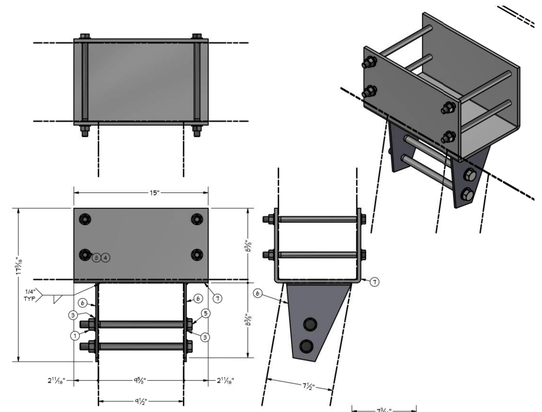

WINDOW BEAM POST CAP DETAIL

PARTS LIST			
ITEM	QTY	PART NUMBER	DESCRIPTION
1	2	ANSI B18.2.2 - 3/4 - 10, HNI	Hex Nuts (Inch Series) Hex Nut
2	4	ANSI B18.2.2 - 5/8 - 11, HNI	Hex Nuts (Inch Series) Hex Nut
3	4	ANSI B18.22.1 - 3/4 - narrow - Type A	Plain Washer (Inch)Type A and B
4	8	ANSI B18.22.1 - 5/8 - narrow - Type B	Plain Washer (Inch)Type A and B
5	2	ANSI/ASME B18.2.1 - 3/4-10 UNG - 12, HBI	Hex Bolt - UNG (Regular Thread - Inch)
6	2	GC STRAP	
7	1	SADDLE	
8	4	ANSI/ASME B18.2.1 - 5/8-11 UNG - 11, HBI	Hex Bolt - UNG (Regular Thread - Inch)

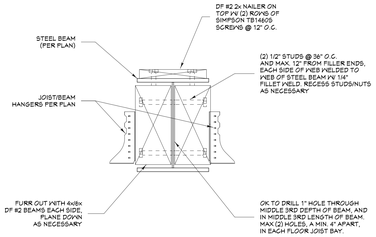

TYP. STEEL NAILER DETAIL
1 1/2 IN = 1 FT

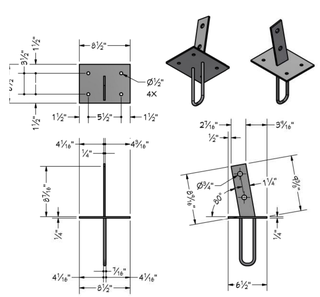

POST BASE SCHEDULE		
NUMBER	LABEL	QTY
PB01	KNIFE PLATE - 8X10 - 10DEG	2

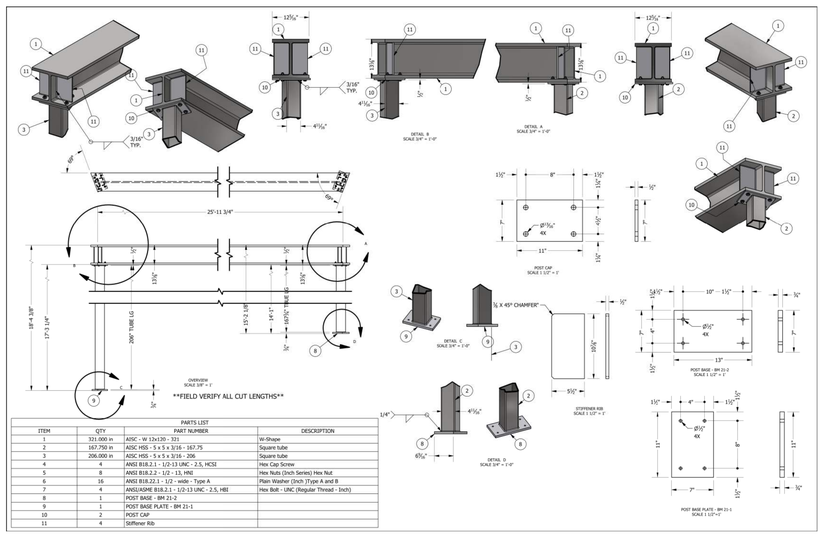

PARTS LIST			
ITEM	QTY	PART NUMBER	DESCRIPTION
1	321.000 in	AISC - W 12x120 - 321	W-Shape
2	167.750 in	AISC HSS - 5 x 5 x 3/16 - 167.75	Square tube
3	206.000 in	AISC HSS - 5 x 5 x 3/16 - 206	Square tube
4	4	ANSI B18.2.1 - 1/2-13 UNC - 2.5, HCS2	Hex Cap Screw
5	8	ANSI B18.2.2 - 1/2 - 13, HNI	Hex Nuts (Inch Series) Hex Nut
6	16	ANSI B18.22.1 - 1/2 - wide - Type A	Plain Washer (Inch)Type A and B
7	4	ANSI/ASME B18.2.1 - 1/2-13 UNC - 2.5, HBI	Hex Bolt - UNC (Regular Thread - Inch)
8	1	POST BASE - BM 21-2	
9	1	POST BASE PLATE - BM 21-1	
10	2	POST CAP	
11	4	Stiffener Rib	

BM2 BEAM #2 DETAIL

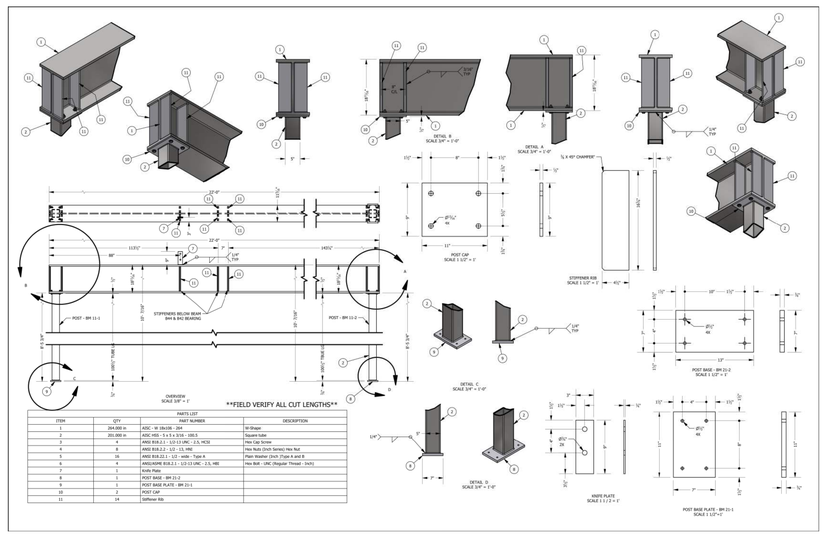

PARTS LIST			
ITEM	QTY	PART NUMBER	DESCRIPTION
1	264.000 in	AISC - W 18x106 - 264	W-Shape
2	200.000 in	AISC HSS - 5 x 5 x 3/16 - 200.5	Square tube
3	4	ANSI B18.2.1 - 1/2-13 UNC - 2.5, HCS2	Hex Cap Screw
4	8	ANSI B18.2.2 - 1/2 - 13, HNI	Hex Nuts (Inch Series) Hex Nut
5	16	ANSI B18.22.1 - 1/2 - wide - Type A	Plain Washer (Inch)Type A and B
6	4	ANSI/ASME B18.2.1 - 1/2-13 UNC - 2.5, HBI	Hex Bolt - UNC (Regular Thread - Inch)
7	1	Kick Plate	
8	1	POST BASE - BM 21-2	
9	1	POST BASE PLATE - BM 21-1	
10	2	POST CAP	
11	14	Stiffener Rib	

BM11 BEAM #11 DETAIL

COLUMN HARDWARE SCHEDULE				
CALLOUT	QTY	MODEL	COLUMN TOP	COLUMN FOOTER
GC01	1	GC - 01L	(2) 1/2" THRU BOLTS	(2) 3/4" THRU BOLTS
GC02	1	GC - 01L-S	(2) 1/2" THRU BOLTS	(2) 3/4" THRU BOLTS
GC03	1	GC - 01T-S	(2) 1/2" THRU BOLTS	(2) 3/4" THRU BOLTS
GC04	9	GC - 01B	(2) 1/2" THRU BOLTS	(2) 3/4" THRU BOLTS
GC05	1	GC - 02		
GC06	1	GC - 03		
TOTALS:	14			

SHEET INDEX	
PAGE	TITLE
A1	COVER SHEET
A2	SITE PLAN
A3	LANDSCAPE PLAN - OVERVIEW
A4	LANDSCAPE PLAN - ENLARGED
A5	IRRIGATION PLAN
A6	FLOOR PLAN - 1ST LEVEL
A7	FLOOR PLAN - BASEMENT
A8	FOUNDATION
A9	DETAIL VIEWS
A10	FABRICATED COLUMN CAPS
A11	STEEL BEAM DETAILS
A12	STEEL BEAM DETAILS
A13	STEEL BEAM DETAILS
A14	WALL BRACING - 1ST LEVEL
A15	WALL BRACING - BASEMENT
A16	FLOOR LAYOUT - 1ST LEVEL
A17	ROOF LAYOUT - BASEMENT
A18	ROOF LAYOUT - 1ST LEVEL
A19	ROOF LAYOUT - OVERVIEW
A20	ELEVATIONS
A21	ELEVATIONS
A22	SECTION VIEWS
A23	SECTION VIEWS
A24	SECTION VIEWS
A25	SECTION VIEWS
A26	SECTION VIEWS
A27	SECTION VIEWS
E1	ELECTRICAL - 1ST LEVEL
E2	ELECTRICAL - BASEMENT

NOT FOR CONSTRUCTION

SCAN FOR CURRENT PLAN

SCAN FOR ENGINEERED CALCS

SCAN FOR 3D FRAMING MODEL

PROJECT NO.
25-017

CONTRACTOR TO VERIFY ALL DETAILS, DIMENSIONS, AND SPECIFICATIONS PRIOR TO CONSTRUCTION AND REPORT ANY DISCREPANCIES OR ERRORS TO SMC DESIGN. SMC DESIGN IS NOT RESPONSIBLE FOR ANY CHANGES MADE TO THESE PLANS AND DESIGN FROM ANY CLAIMS, LITIGATIONS OR SUITS THAT MAY ARISE DURING CONSTRUCTION OR ANYTIME THEREAFTER.

LEGACY RANCH LOT #13
ADAMS CO., ID

SHEET SIZE
ARCH E2 (36" x 54")

INITIAL DATE: 11/19/2025
PRINT DATE: 11/17/2026

DRAWN BY:
Steve

FABRICATED COLUMN CAPS

SMC Design
208.249.7266
Nampa, ID

SHEET NUMBER
A10
PAGE 10

PRELI
NOT FOR C

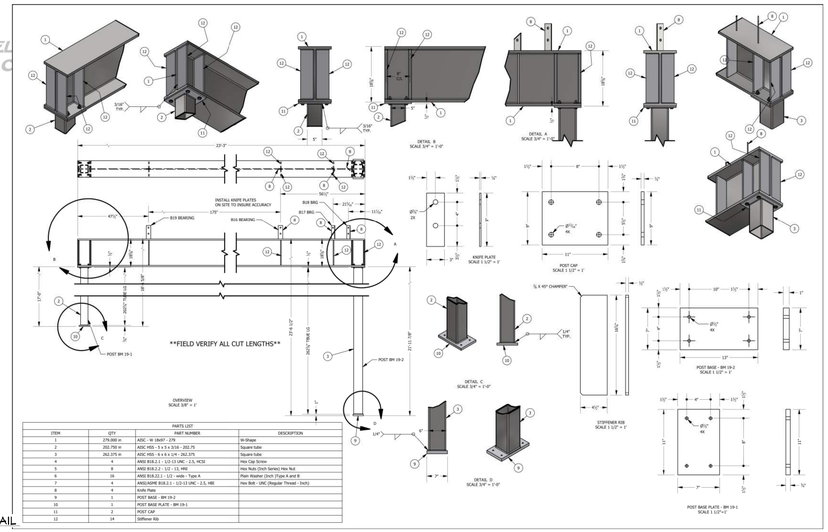

PARTS LIST			
ITEM	QTY	PART NUMBER	DESCRIPTION
1	276.000 in	AISC - W 6x9 - 279	W-Shape
2	262.750 in	AISC HSS - 5 x 5 x 3/16 - 262.75	Square tube
3	262.375 in	AISC HSS - 6 x 6 x 1/4 - 262.375	Square tube
4	4	ANSI B18.2.1 - 1/2-13 UNC - 2.5, HCSI	Hex Cap Screw
5	8	ANSI B18.2.2 - 1/2 - 13, HNI	Hex Nuts (Inch Series) Hex Nut
6	16	ANSI B18.22.1 - 1/2 - wide - Type A	Plain Washer (Inch (Type A and B
7	4	ANSI/ASME B18.2.1 - 1/2-13 UNC - 2.5, HBI	Hex Bolt - UNC (Regular Thread - Inch)
8	4		Knife Plate
9	1	POST BASE - BM 19-2	
10	1	POST BASE PLATE - BM 19-1	
11	2	POST CAP	
12	14	Stiffener Rib	

BM19 BEAM #19 DETAIL

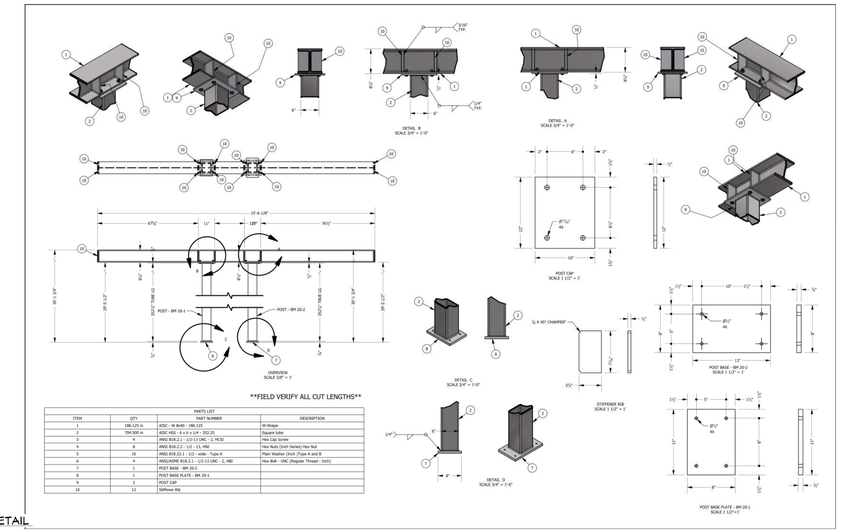

PARTS LIST			
ITEM	QTY	PART NUMBER	DESCRIPTION
1	185.125 in	AISC - W 8x40 - 186.125	W-Shape
2	704.500 in	AISC HSS - 6 x 6 x 1/4 - 352.25	Square tube
3	4	ANSI B18.2.1 - 1/2-13 UNC - 2, HCSI	Hex Cap Screw
4	8	ANSI B18.2.2 - 1/2 - 13, HNI	Hex Nuts (Inch Series) Hex Nut
5	16	ANSI B18.22.1 - 1/2 - wide - Type A	Plain Washer (Inch (Type A and B
6	4	ANSI/ASME B18.2.1 - 1/2-13 UNC - 2, HBI	Hex Bolt - UNC (Regular Thread - Inch)
7	1	POST BASE - BM 20-2	
8	1	POST BASE PLATE - BM 20-1	
9	2	POST CAP	
10	12	Stiffener Rib	

BM20 BEAM #20 DETAIL

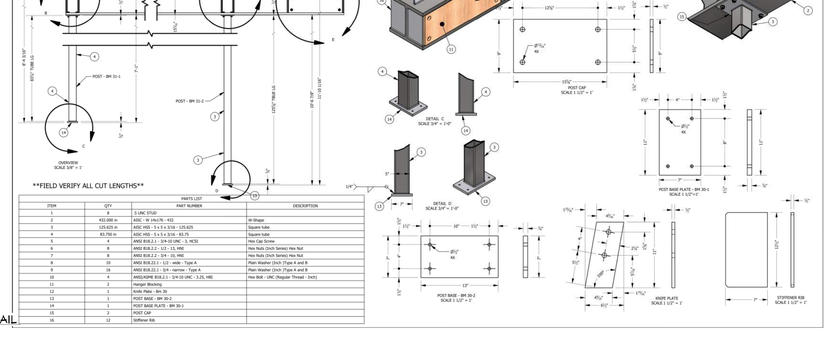

PARTS LIST			
ITEM	QTY	PART NUMBER	DESCRIPTION
1	314.000 in	AISC - W 10x60 - 314	W-Shape
2	29.000 in	AISC HSS - 3 x 3 x 3/16 - 29	Square tube
3	65.500 in	AISC HSS - 3 x 3 x 3/16 - 65.5	Square tube
4	4	ANSI B18.2.1 - 3/4-10 UNC - 2.5, HCSI	Hex Cap Screw
5	8	ANSI B18.2.2 - 3/4 - 10, HNI	Hex Nuts (Inch Series) Hex Nut
6	16	ANSI B18.22.1 - 3/4 - narrow - Type A	Plain Washer (Inch (Type A and B
7	4	ANSI/ASME B18.2.1 - 3/4-10 UNC - 2.5, HBI	Hex Bolt - UNC (Regular Thread - Inch)
8	1	POST BASE - BM 27-2	
9	1	POST BASE PLATE - BM 27-1	
10	1	POST CAP	
11	1	Post Cap - Bm 27-2	
12	4	Stiffener Rib	

BM27 BEAM #27 DETAIL

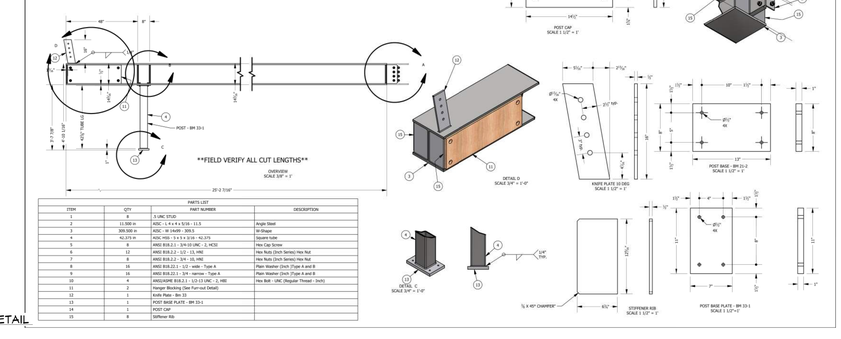

PARTS LIST			
ITEM	QTY	PART NUMBER	DESCRIPTION
1	8	.5 UNC STUD	
2	432.000 in	AISC - W 24x76 - 432	W-Shape
3	125.625 in	AISC HSS - 5 x 5 x 5/16 - 125.625	Square tube
4	83.758 in	AISC HSS - 5 x 5 x 3/16 - 83.75	Square tube
5	4	ANSI B18.2.1 - 5/8-03 UNC - 3, HCSI	Hex Cap Screw
6	8	ANSI B18.2.2 - 1/2 - 13, HNI	Hex Nuts (Inch Series) Hex Nut
7	8	ANSI B18.2.2 - 5/8 - 11, HNI	Hex Nuts (Inch Series) Hex Nut
8	16	ANSI B18.22.1 - 1/2 - wide - Type A	Plain Washer (Inch (Type A and B
9	16	ANSI B18.22.1 - 5/8 - narrow - Type A	Plain Washer (Inch (Type A and B
10	4	ANSI/ASME B18.2.1 - 5/8-11 UNC - 3.25, HBI	Hex Bolt - UNC (Regular Thread - Inch)
11	2	Hanger Blocking	
12	1	Knife Plate - Bm 30	
13	1	POST BASE - BM 30-2	
14	1	POST BASE PLATE - BM 30-1	
15	2	POST CAP	
16	12	Stiffener Rib	

BM30 BEAM #30 DETAIL

PARTS LIST			
ITEM	QTY	PART NUMBER	DESCRIPTION
1	8	.5 UNC STUD	
2	432.000 in	AISC - W 24x76 - 432	W-Shape
3	125.625 in	AISC HSS - 5 x 5 x 5/16 - 125.625	Square tube
4	83.758 in	AISC HSS - 5 x 5 x 3/16 - 83.75	Square tube
5	4	ANSI B18.2.1 - 5/8-03 UNC - 3, HCSI	Hex Cap Screw
6	8	ANSI B18.2.2 - 1/2 - 13, HNI	Hex Nuts (Inch Series) Hex Nut
7	8	ANSI B18.2.2 - 5/8 - 11, HNI	Hex Nuts (Inch Series) Hex Nut
8	16	ANSI B18.22.1 - 1/2 - wide - Type A	Plain Washer (Inch (Type A and B
9	16	ANSI B18.22.1 - 5/8 - narrow - Type A	Plain Washer (Inch (Type A and B
10	4	ANSI/ASME B18.2.1 - 5/8-11 UNC - 3.25, HBI	Hex Bolt - UNC (Regular Thread - Inch)
11	2	Hanger Blocking	
12	1	Knife Plate - Bm 31	
13	1	POST BASE PLATE - BM 31-2	
14	1	POST CAP	
15	2	Stiffener Rib	

BM31 BEAM #31 DETAIL

PARTS LIST			
ITEM	QTY	PART NUMBER	DESCRIPTION
1	8	.5 UNC STUD	
2	11.500 in	AISC - L 4 x 4 x 5/16 - 11.5	Angle Steel
3	309.500 in	AISC - W 24x76 - 309.5	W-Shape
4	42.375 in	AISC HSS - 5 x 5 x 3/16 - 42.375	Square tube
5	8	ANSI B18.2.1 - 3/4-10 UNC - 2, HCSI	Hex Cap Screw
6	12	ANSI B18.2.2 - 1/2 - 13, HNI	Hex Nuts (Inch Series) Hex Nut
7	8	ANSI B18.2.2 - 3/4 - 10, HNI	Hex Nuts (Inch Series) Hex Nut
8	16	ANSI B18.22.1 - 1/2 - wide - Type A	Plain Washer (Inch (Type A and B
9	16	ANSI B18.22.1 - 3/4 - narrow - Type A	Plain Washer (Inch (Type A and B
10	4	ANSI/ASME B18.2.1 - 1/2-13 UNC - 2, HBI	Hex Bolt - UNC (Regular Thread - Inch)
11	2	Hanger Blocking (See Purl out Detail)	
12	1	Knife Plate - Bm 33	
13	1	POST BASE PLATE - BM 33-1	
14	1	POST CAP	
15	8	Stiffener Rib	

BM33 BEAM #33 DETAIL

BEAM SCHEDULE						
			STEEL NAILER DETAIL FOR STEEL BEAMS WHERE APPLICABLE			
MK	PLIES	PLY SIZE	MATERIAL	TOP BEAM	B.O. BEAM	CALC #
B01	2	1	(B-01) 11 3/4 X 11 7/8 - ABOVE TOP PLY	0'-0"	0'-0 7/8"	1
B02	2	1	(B-02) 12 5/16 X 13 1/2 (HT)(36ksi A992-50	26'-4"	21'-5"	2
B03	2	1	(B-03) 6 3/4 X 18	15'-6"	24'-3 7/8"	3
B04	2	1	(B-04) 6 3/4 X 15	11'-4"	26'-3 5/8"	4
B05	2	1	(B-05) 6 3/4 X 21	36'-1 1/8"	28'-1 7/8"	5
B06	2	1	(B-06) 6 3/4 X 21	30'-4"	29'-3 1/8"	6
B07	2	1	(B-07) 6 3/4 X 21	30'-1 3/8"	26'-5 5/8"	7
B08	2	1	(B-08) 6 3/4 X 21	30'-1 3/8"	27'-1 5/8"	8
B09	2	1	(B-09) 6 3/4 X 18	27'-1"	28'-11 5/8"	9
B10	2	1	(B-10) 6 3/4 X 18	31'-1 1/2"	29'-11 5/8"	10
B11	1	1	(B-11)	11'-3 1/8"	19'-1 1/8"	11
B12	2	1	(B-12) 6 3/4 X 24	24'-6"	31'-1 1/8"	12
B13	2	1	(B-13) 6 3/4 X 30	24'-6 1/4"	24'-2"	13
B14	2	1	(B-14) 6 3/4 X 24	23'-10 3/4"	21'-10"	14
B15	2	1	(B-15) 6 3/4 X 30	28'-6"	29'-2"	15
B16	2	1	(B-16) 6 3/4 X 21 1/2	28'-6"	30'-3 1/8"	16
B17	2	1	(B-17) 6 3/4 X 24	34'-11 5/8"	29'-11 1/8"	17
B18	2	1	(B-18) 6 3/4 X 18	31'-5"	28'-11 1/4"	18
B19	1	1	(B-19)		12'-3 1/8"	19
B20	2	1	(B-20)		10'-1 1/8"	20
B21	2	1	(B-21) 6 3/4 X 13	7'-8"	24'-4 1/8"	21
B22	2	1	(B-22) 6 3/4 X 13	6'-4"	26'-4 1/8"	22
B23	2	1	(B-23) 6 3/4 X 13	5'-3 3/8"	28'-4 1/8"	23
B24	2	1	(B-24) 6 3/4 X 13	9'-3"	29'-4 1/8"	24
B25	2	1	(B-25) 6 3/4 X 11 1/4	29'-11 1/4"	29'-10 1/8"	25
B26	2	1	(B-26) 6 3/4 X 24	31'-5 1/8"	12'-3 1/8"	26
B27	1	1	(B-27) 10 1/8 X 10 3/16 (HT)(3 X60 A992-50	10'-8 5/0"	4'-3 5/0"	27
B28	2	1	(B-28) 6 3/4 X 11 5/8	11'-9"	10'-1 1/8"	28
B29	1	3	(B-29) 6 3/4 X 14	14'-1 5/0"	10'-11 1/8"	29
B30	1	1	(B-30)	12'-1 1/8"	10'-11 1/8"	30
B31	1	1	(B-31)	2'-2 1/8"	7'-4 5/0"	31
B32	2	1	(B-32) 6 3/4 X 18	12'-10 3/4"	11'-1 1/8"	32
B33	1	3	(B-33)			33
B34	1	3	(B-34) 6 3/4 X 18	22'-2 7/8"	12'-1 1/8"	34
B35	1	3	(B-35)			35
B36	1	3	(B-36)			36
B37	1	2	(B-37) 3 3/4 X 11 5/0	4'-3 3/4"	11'-1"	37
B38	2	3	(B-38) 1 3/4 X 11 5/0	4'-11 1/2"	22'-2 3/4"	38
B39	1	1	(B-39) 5 1/2 X 33	2'1"	16'-10 1/8"	39
B40	1	1	(B-40) 4X0	4'-5 1/0"	12'-1 5/0"	40
B41	1	2	(B-41) 3 3/4 X 11 5/0	16'-0 3/4"	11'-1 1/8"	41
B42	1	3	(B-42) 1 3/4 X 18 1/2	14'	18'-1 1/8"	42
B43	1	3	(B-43) 1 3/4 X 18	13'-1 3/4"	18'-1 1/8"	43
B44	1	1	(B-44)			44
B45	1	1	(B-45) 5 1/0 X 15	19'-3 1/2"	10'-3 1/8"	45
B46	1	1	(B-46)			46
B47	1	1	(B-47) 1 1/2 X 15	10'-11"	11'-4 1/8"	47
B48	1	1	(B-48) 1 1/2 X 15	10'-3 1/2"	11'-5 1/8"	48
B49	1	1	(B-49) 5 1/0 X 15	4'-1 3/0"	11'-9 5/0"	49
B50	1	1	(B-50)			50
B51	1	1	(B-51) 5 1/0 X 15	11'-9"	10'-2"	51
B52	1	1	(B-52) 2 3/4 X 15	18'	11'-1 1/8"	52
B53	1	1	(B-53)			53
B54	1	1	(B-54)			54
B55	1	1	(B-55)			55
B56	1	1	(B-56)			56
B57	1	1	(B-57)			57
B58	3	3	(B-58) 1 3/4 X 14	7'-4 7/0"	11'-3 1/8"	58
B59	2	3	(B-59) 1 3/4 X 13 1/2	7'-11 1/8"	22'-3 1/0"	59
B60	2	3	(B-60) 1 3/4 X 14	12'-4 1/8"	22'-2 3/4"	60
B61	2	3	(B-61) 1 3/4 X 15	16'-1 1/4"	22'-2 3/4"	61

SCAN FOR CURRENT PLAN
SCAN FOR ENGINEERED CALCS
SCAN FOR 3D FRAMING MODEL

ENGINEER STAMP AREA

PROJECT NO.
25-017

THESE PLANS ARE FOR PROP. CONSTRUCTION AND REPORT ANY DISCREPANCIES TO THE ARCHITECT AND ENGINEER OF RECORD. DO NOT SCALE DRAWINGS. ANY ALTERATIONS OR DEVIATIONS FROM THESE PLANS WITHOUT THE KNOWLEDGE AND CONSENT OF THE ARCHITECT AND ENGINEER OF RECORD SHALL RELIEVE THE ARCHITECT AND ENGINEER OF RECORD FROM ANY AND ALL RESPONSIBILITY FOR THE PERFORMANCE OF THE BUILDING AND SHALL INDEMNIFY AND HOLD HARMLESS THE ARCHITECT AND ENGINEER OF RECORD FROM ANY AND ALL LIABILITY ARISING FROM OR CONNECTED THEREWITH. CONTRACTOR TO VERIFY ALL DETAILS, DIMENSIONS, AND SPECIFICATIONS PRIOR CONSTRUCTION AND REPORT ANY DISCREPANCIES TO THE ARCHITECT AND ENGINEER OF RECORD. DO NOT SCALE DRAWINGS. ANY ALTERATIONS OR DEVIATIONS FROM THESE PLANS WITHOUT THE KNOWLEDGE AND CONSENT OF THE ARCHITECT AND ENGINEER OF RECORD SHALL RELIEVE

PRELI
NOT FOR C

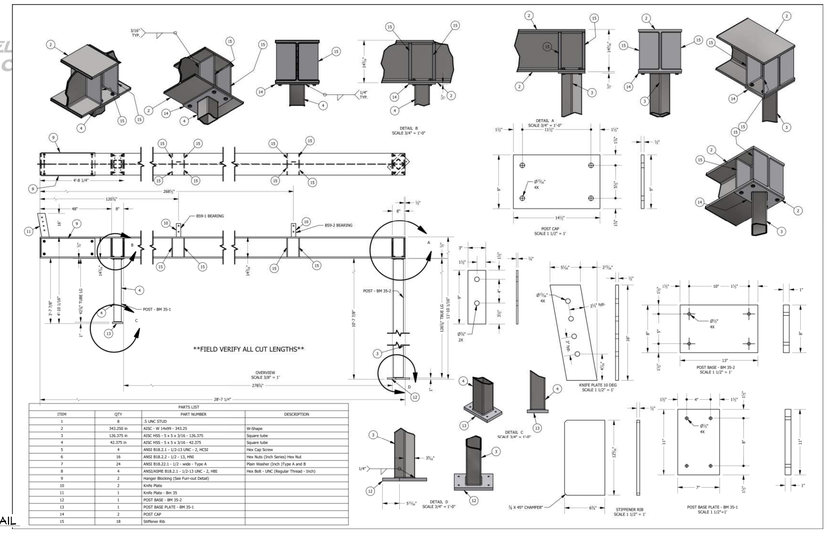

FIELD VERIFY ALL CUT LENGTHS

ITEM	QTY	PART NUMBER	DESCRIPTION
1	8	2 UNC STUD	
2	343.258 in	ASSC - W 24x99 - 343.25	W-Shape
3	126.375 in	ASSC HSS - 5 x 5 x 3/16 - 126.375	Square tube
4	42.375 in	ASSC HSS - 5 x 5 x 3/16 - 42.375	Square tube
5	4	ANSI B18.2.1 - 1/2-13 UNC - 1, HCS2	Hex Cap Screw
6	16	ANSI B18.2.2 - 1/2 - 13, HN2	Hex Nuts (Inch Series) Hex Nut
7	24	ANSI B18.22.1 - 1/2 - wide - Type A	Plain Washer (Inch [Type A and B
8	4	ANSI/ASME B18.2.1 - 1/2-13 UNC -2, HB	Hex Bolt - UNC (Regular Thread - Inch)
9	2	Hanger Blocking (See Furr-out Detail)	
10	2	Knife Plate	
11	1	Knife Plate - Bm 35	
12	1	POST BASE - BM 35-2	
13	1	POST BASE PLATE - BM 35-1	
14	2	POST CAP	
15	18	Stiffener Rib	

BM35 BEAM #35 DETAIL

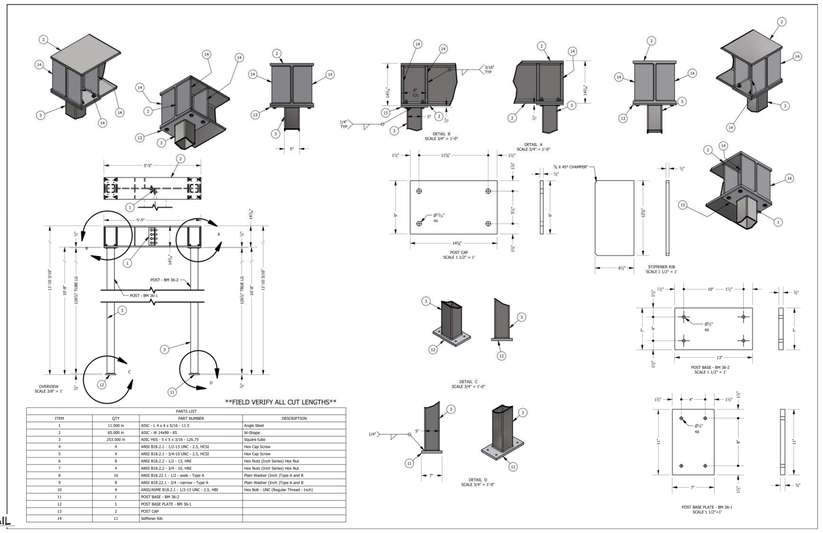

FIELD VERIFY ALL CUT LENGTHS

ITEM	QTY	PART NUMBER	DESCRIPTION
1	11.500 in	ASSC - L 4 x 4 x 5/16 - 11.5	Angle Steel
2	43.000 in	ASSC - W 24x99 - 93	W-Shape
3	253.500 in	ASSC HSS - 5 x 5 x 3/16 - 126.75	Square tube
4	4	ANSI B18.2.1 - 1/2-13 UNC - 2.5, HCS2	Hex Cap Screw
5	4	ANSI B18.2.1 - 3/4-10 UNC - 2.5, HCS2	Hex Cap Screw
6	8	ANSI B18.2.2 - 1/2 - 13, HN2	Hex Nuts (Inch Series) Hex Nut
7	4	ANSI B18.2.2 - 3/4 - 10, HN2	Hex Nuts (Inch Series) Hex Nut
8	16	ANSI B18.22.1 - 1/2 - wide - Type A	Plain Washer (Inch [Type A and B
9	8	ANSI B18.22.1 - 3/4 - narrow - Type A	Plain Washer (Inch [Type A and B
10	4	ANSI/ASME B18.2.1 - 1/2-13 UNC - 2.5, HB	Hex Bolt - UNC (Regular Thread - Inch)
11	1	POST BASE - BM 36-2	
12	1	POST BASE PLATE - BM 36-1	
13	2	POST CAP	
14	11	Stiffener Rib	

BM36 BEAM #36 DETAIL

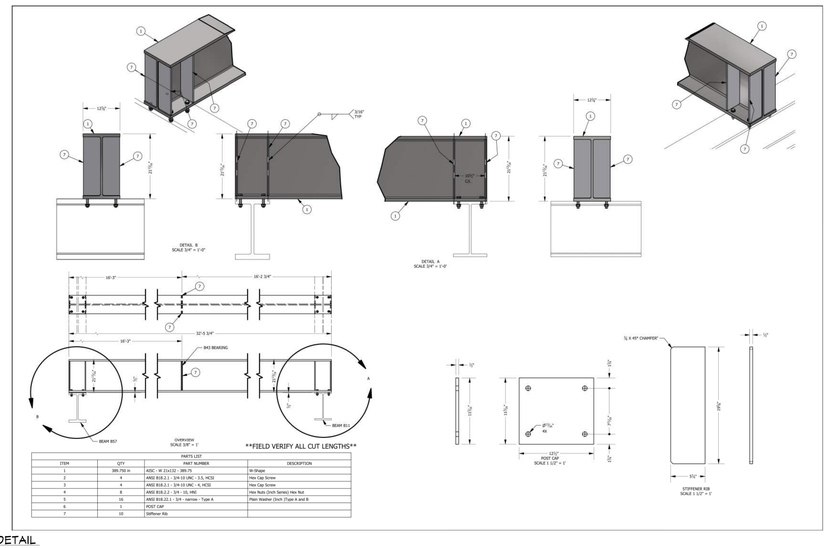

FIELD VERIFY ALL CUT LENGTHS

ITEM	QTY	PART NUMBER	DESCRIPTION
1	8	3 UNC STUD	
2	385.000 in	ASSC - W 12x120 - 385	W-Shape
3	123.500 in	ASSC HSS - 5 x 5 x 3/16 - 123.5	Square tube
4	96.750 in	ASSC HSS - 5 x 5 x 3/16 - 96.75	Square tube
5	4	ANSI B18.2.1 - 3/4-10 UNC - 2.75, HCS2	Hex Cap Screw
6	10	ANSI B18.2.2 - 3/4 - 10, HN2	Hex Nuts (Inch Series) Hex Nut
7	20	ANSI B18.22.1 - 3/4 - narrow - Type A	Plain Washer (Inch [Type A and B
8	1	End Cap Mount	
9	1	POST BASE - BM 50-2	
10	1	POST BASE PLATE - BM 50-1	
11	2	POST CAP	
12	6	Stiffener Rib	

BM44 BEAM #44 DETAIL

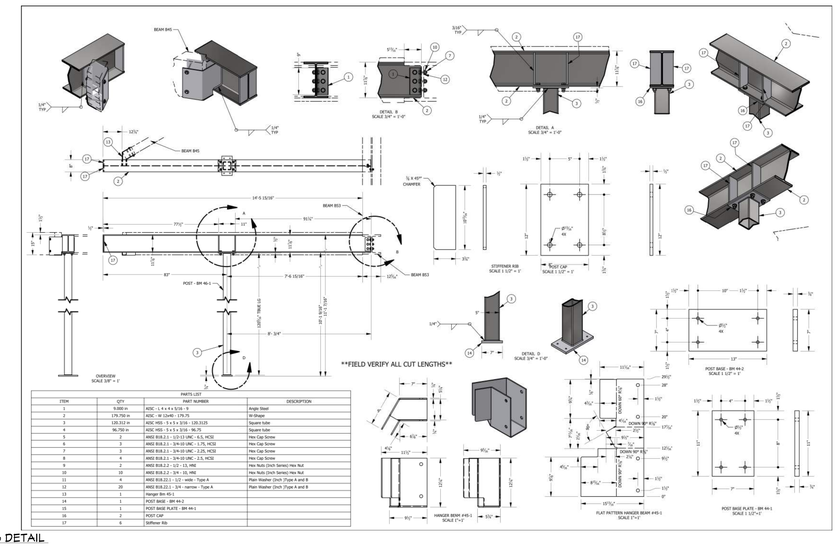

FIELD VERIFY ALL CUT LENGTHS

ITEM	QTY	PART NUMBER	DESCRIPTION
1	8	3 UNC STUD	
2	354.000 in	ASSC - W 12x120 - 354	W-Shape
3	118.512 in	ASSC HSS - 5 x 5 x 3/16 - 118.3125	Square tube
4	96.750 in	ASSC HSS - 5 x 5 x 3/16 - 96.75	Square tube
5	4	ANSI B18.2.1 - 3/4-10 UNC - 2.75, HCS2	Hex Cap Screw
6	4	ANSI B18.2.1 - 3/4-10 UNC - 4, HCS2	Hex Cap Screw
7	8	ANSI B18.2.2 - 1/2 - 13, HN2	Hex Nuts (Inch Series) Hex Nut
8	8	ANSI B18.2.2 - 3/4 - 10, HN2	Hex Nuts (Inch Series) Hex Nut
9	8	ANSI B18.22.1 - 1/2 - wide - Type A	Plain Washer (Inch [Type A and B
10	16	ANSI B18.22.1 - 3/4 - narrow - Type A	Plain Washer (Inch [Type A and B
11	2	Hanger Blocking (See Furr-out Detail)	
12	1	POST BASE - BM 53-2	
13	1	POST BASE PLATE - BM 53-1	
14	2	POST CAP	
15	12	Stiffener Rib	

BM46 BEAM #46 DETAIL

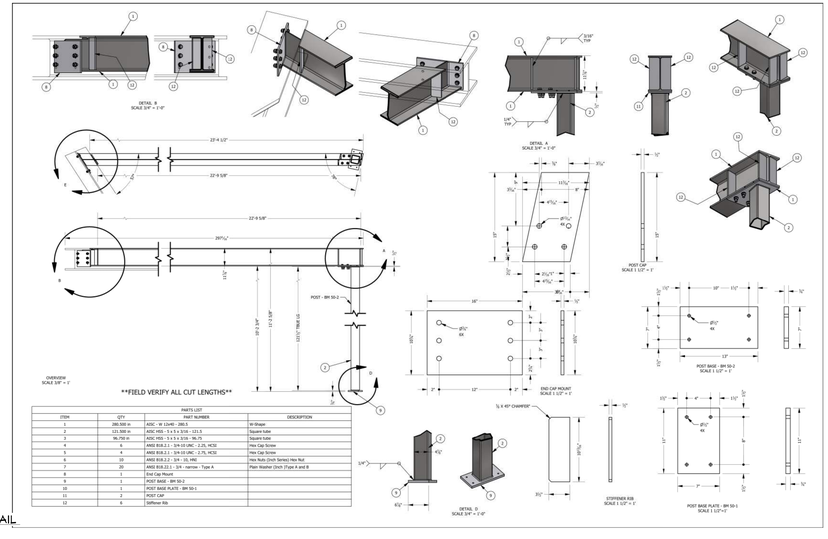

FIELD VERIFY ALL CUT LENGTHS

ITEM	QTY	PART NUMBER	DESCRIPTION
1	8	2 UNC STUD	
2	23.500 in	ASSC - W 24x99 - 23.5	W-Shape
3	123.500 in	ASSC HSS - 5 x 5 x 3/16 - 123.5	Square tube
4	6	ANSI B18.2.1 - 3/4-10 UNC - 3.5, HCS2	Hex Cap Screw
5	4	ANSI B18.2.1 - 1/2-13 UNC - 2, HCS2	Hex Cap Screw
6	10	ANSI B18.2.2 - 3/4 - 10, HN2	Hex Nuts (Inch Series) Hex Nut
7	20	ANSI B18.22.1 - 3/4 - narrow - Type A	Plain Washer (Inch [Type A and B
8	1	End Cap Mount	
9	1	POST BASE - BM 50-2	
10	1	POST BASE PLATE - BM 50-1	
11	2	POST CAP	
12	6	Stiffener Rib	

BM50 BEAM #50 DETAIL

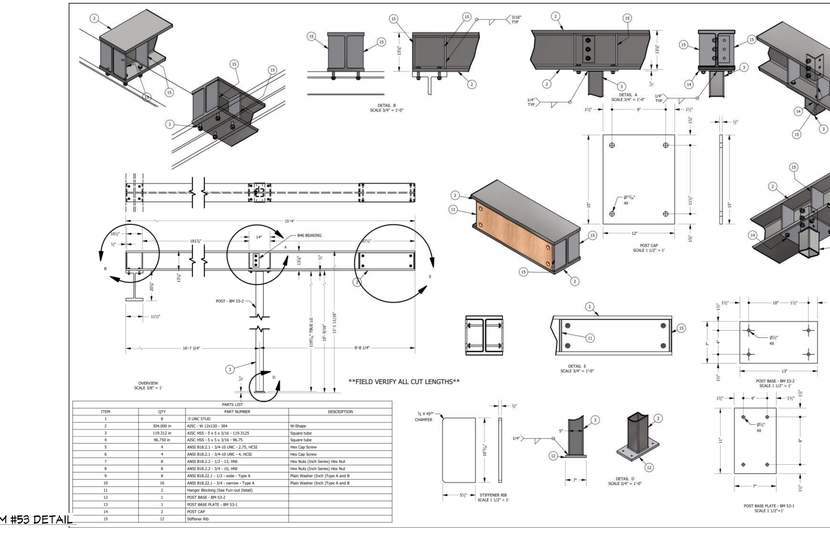

FIELD VERIFY ALL CUT LENGTHS

ITEM	QTY	PART NUMBER	DESCRIPTION
1	8	3 UNC STUD	
2	354.000 in	ASSC - W 12x120 - 354	W-Shape
3	118.512 in	ASSC HSS - 5 x 5 x 3/16 - 118.3125	Square tube
4	96.750 in	ASSC HSS - 5 x 5 x 3/16 - 96.75	Square tube
5	4	ANSI B18.2.1 - 3/4-10 UNC - 2.75, HCS2	Hex Cap Screw
6	4	ANSI B18.2.1 - 3/4-10 UNC - 4, HCS2	Hex Cap Screw
7	8	ANSI B18.2.2 - 1/2 - 13, HN2	Hex Nuts (Inch Series) Hex Nut
8	8	ANSI B18.2.2 - 3/4 - 10, HN2	Hex Nuts (Inch Series) Hex Nut
9	8	ANSI B18.22.1 - 1/2 - wide - Type A	Plain Washer (Inch [Type A and B
10	16	ANSI B18.22.1 - 3/4 - narrow - Type A	Plain Washer (Inch [Type A and B
11	2	Hanger Blocking (See Furr-out Detail)	
12	1	POST BASE - BM 53-2	
13	1	POST BASE PLATE - BM 53-1	
14	2	POST CAP	
15	12	Stiffener Rib	

BM53 BEAM #53 DETAIL

BEAM SCHEDULE (STEEL NAILER DETAIL FOR STEEL BEAMS WHERE APPLICABLE)						
MK	PLR	PLY	MATERIAL	FLR LVL HT. / MIN. END	T.O. BEAM	B.O. BEAM / CALC #
B01	2	1	(1)-5x11 7/8 X 11 7/8 - ABOVE TOP PLY		22'-0 7/8"	21'-0 7/8"
B02	2	1	(1)-c(2) 12 5/16 x 12 1/2 (12)x(2)SBS A992-50		26'-8"	21'-5"
B03	2	1	(1)-5x(5) 6 3/4 X 15		15'-6"	21'-5 7/8"
B04	2	1	(1)-5x(4) 5 3/4 X 15		11'-6"	26'-3 5/8"
B05	2	1	(1)-5x(3) 4 3/4 X 15		11'-6"	26'-11 1/8"
B06	2	1	(1)-5x(3) 3 3/4 X 21		30'-8"	26'-3 1/8"
B07	2	1	(1)-5x(2) 3 3/4 X 21		30'-1 3/8"	26'-8 5/8"
B08	2	1	(1)-5x(2) 3 3/4 X 21		30'-1 3/8"	26'-8 5/8"
B09	2	1	(1)-5x(2) 3 3/4 X 21		30'-1 3/8"	24'-11 5/8"
B10	2	1	(1)-5x(2) 3 3/4 X 21		30'-1 3/8"	24'-11 5/8"
B11	1	1	(1)-5x(2) 3 3/4 X 21		30'-1 3/8"	24'-11 5/8"
B12	1	1	(1)-5x(2) 3 3/4 X 21		30'-1 3/8"	24'-11 5/8"
B13	2	1	(1)-5x(2) 3 3/4 X 24		24'-6"	21'-5"
B14	2	1	(1)-5x(2) 3 3/4 X 24		24'-6 1/4"	21'-5"
B15	2	1	(1)-5x(2) 3 3/4 X 30		24'-10 3/4"	21'-5"
B16	2	1	(1)-5x(2) 3 3/4 X 30		29'-0"	24'-4 1/2"
B17	2	1	(1)-5x(2) 3 3/4 X 30		29'-0 1/2"	24'-10 1/2"
B18	2	1	(1)-5x(3) 5 1/2 X 21		11'-1 5/8"	26'-3 1/4"
B19	2	1	(1)-5x(2) 3 3/4 X 24		24'-6"	21'-11 1/8"
B20	2	1	(1)-5x(2) 3 3/4 X 24		24'-6 1/4"	21'-5"
B21	2	1	(1)-5x(2) 3 3/4 X 30		24'-10 3/4"	21'-5"
B22	2	1	(1)-5x(2) 3 3/4 X 30		29'-0"	24'-4 1/2"
B23	2	1	(1)-5x(2) 3 3/4 X 30		29'-0 1/2"	24'-10 1/2"
B24	2	1	(1)-5x(2) 3 3/4 X 18		17'-3 3/8"	26'-3 1/4"
B25	1	1	(1)-5x(1) 3 3/4 X 18		11'-6 1/4"	10'-1 1/8"
B26	1	1	(1)-5x(1) 3 3/4 X 24		21'-8 7/8"	12'-1 1/8"
B27	1	1	(1)-5x(1) 10 1/8 X 15 3/16 y410 X 60 A992-50		26'-2"	17'-5 5/8"
B28	2	1	(1)-5x(1) 3 3/4 X 18		17'-3 3/8"	12'-1 1/8"
B29	3	1	(1)-5x(1) 3 3/4 X 14		14'-11 5/8"	10'-11 1/8"
B30	1	1	(1)-5x(1) 3 3/4 X 14		12'-1 1/8"	10'-11 1/8"
B31	1	1	(1)-5x(1) 3 3/4 X 13		12'-1 1/8"	9'-8 5/8"
B32	1	1	(1)-5x(1) 3 3/4 X 13		12'-10 3/4"	10'-1 1/8"
B33	1	1	(1)-5x(1) 3 3/4 X 13			
B34	1	1	(1)-5x(1) 3 3/4 X 13		22'-2 7/8"	10'-1 1/8"
B35	1	1	(1)-5x(1) 3 3/4 X 13			
B36	1	1	(1)-5x(1) 3 3/4 X 13			
B37	2	3	(1)-5x(1) 3 3/4 X 11 1/2		4'-1 3/4"	10'-1 1/8"
B38	2	3	(1)-5x(1) 3 3/4 X 11 1/2		4'-11 1/2"	22'-2 5/8"
B39	3	3	(1)-5x(1) 3 3/4 X 11 1/2		9'-2 1/2"	21'-0 1/8"
B40	3	3	(1)-5x(1) 3 3/4 X 13		14'-3 1/4"	21'-0 1/8"
B41	1	1	(1)-5x(1) 3 3/4 X 13			10'-1 1/8"
B42	1	1	(1)-5x(1) 3 3/4 X 14 1/2			12'-1 1/8"
B43	1	1	(1)-5x(1) 3 3/4 X 13		19'-3 1/2"	11'-6 1/8"
B44	1	1	(1)-5x(1) 3 3/4 X 13			
B45	1	1	(1)-5x(1) 5 1/8 X 15		19'-3 1/2"	11'-6 1/8"
B46	1	1	(1)-5x(1) 3 3/4 X 13			
B47	1	1	(1)-5x(1) 5 1/8 X 15		19'-3 1/2"	11'-6 1/8"
B48	1	1	(1)-5x(1) 3 1/2 X 15		11'-6 1/8"	10'-3 1/8"
B49	1	1	(1)-5x(1) 3 1/2 X 15		11'-6 1/8"	10'-3 1/8"
B50	1	1	(1)-5x(1) 5 1/8 X 15		4'-1 3/4"	10'-3 5/8"
B51	1	1	(1)-5x(1) 5 1/8 X 15		4'-4 7/8"	11'-9"
B52	1	1	(1)-5x(1) 3 3/4 X 15		14'	11'-1 1/8"
B53	1	1	(1)-5x(1)			
B54	1	1	(1)-5x(1)			
B55	1	1	(1)-5x(1)			
B56	1	1	(1)-5x(1)			
B57	1	1	(1)-5x(1)			
B58	3	1	(1)-5x(1) 3 3/4 X 14		7'-4 7/8"	11'-3 1/8"
B59	2	1	(1)-5x(2) 3 3/4 X 13 1/2		12'-11 1/4"	22'-3 1/8"
B60	2	1	(1)-5x(2) 3 3/4 X 15		22'-4 3/4"	21'-10 3/4"
B61	2	1	(1)-5x(1) 3 3/4 X 13		16'-1 1/4"	22'-2 3/4"

SCAN FOR CURRENT PLAN
SCAN FOR ENGINEERED CALCS
SCAN FOR 3D FRAMING MODEL

ENGINEER STAMP AREA

PROJECT NO.
25-017

CONTRACTOR TO VERIFY ALL DETAILS, DIMENSIONS, AND SPECIFICATIONS PRIOR TO CONSTRUCTION AND REPORT ANY DISCREPANCIES OR CHANGES IN DESIGN FROM ANY CLAIMS, LITIGATIONS OR SUITS THAT MAY ARISE DURING CONSTRUCTION OR ANYTIME THEREAFTER.

LEGACY RANCH LOT #13
ADAMS CO., ID

SHEET SIZE
ARCH E2 (36" x 54")

INITIAL DATE: 11/19/2025
PRINT DATE: 11/17/2026

DRAWN BY:
Steve

STEEL BEAM DETAILS

SWC Design
SWC Design
208.249.7268
Nampa, ID

SHEET NUMBER
A12
PAGE 12

SHEET INDEX	
PAGE	TITLE
A1	COVER SHEET
A2	SITE PLAN
A3	LANDSCAPE PLAN - OVERVIEW
A4	LANDSCAPE PLAN - ENLARGED
A5	IRRIGATION PLAN
A6	FLOOR PLAN - 1ST LEVEL
A7	FLOOR PLAN - BASEMENT
A8	FOUNDATION
A9	DETAIL VIEWS
A10	FABRICATED COLUMN CAPS
A11	STEEL BEAM DETAILS
A12	STEEL BEAM DETAILS
A13	STEEL BEAM DETAILS
A14	WALL BRACING - 1ST LEVEL
A15	WALL BRACING - BASEMENT
A16	FLOOR LAYOUT - 1ST LEVEL
A17	ROOF LAYOUT - BASEMENT
A18	ROOF LAYOUT - 1ST LEVEL
A19	ROOF LAYOUT - OVERVIEW
A20	ELEVATIONS
A21	ELEVATIONS
A22	SECTION VIEWS
A23	SECTION VIEWS
A24	SECTION VIEWS
A25	SECTION VIEWS
A26	SECTION VIEWS
A27	SECTION VIEWS
E1	ELECTRICAL - 1ST LEVEL
E2	ELECTRICAL - BASEMENT

NOT FOR CONSTRUCTION

PRELI
NOT FOR C

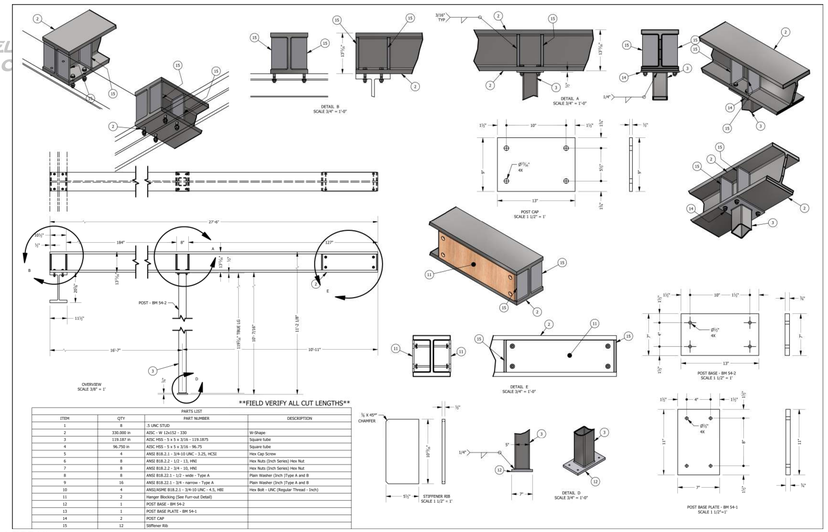

FIELD VERIFY ALL CUT LENGTHS

PARTS LIST			
ITEM	QTY	PART NUMBER	DESCRIPTION
1	8	3 UNC STUD	
2	330.000 in	ASDC - W 12x136 - 330	W-Shape
3	119.187 in	ASDC HSS - 5 x 5 x 3/16 - 119.1875	Square tube
4	96.750 in	ASDC HSS - 5 x 5 x 3/16 - 96.75	Square tube
5	4	ANSI B18.2.1 - 3/4-10 UNC - 3.25, HCS2	Hex Cap Screw
6	8	ANSI B18.2.2 - 1/2 - 13, HN2	Hex Nuts (Inch Series) Hex Nut
7	10	ANSI B18.2.2 - 3/4 - 10, HN2	Hex Nuts (Inch Series) Hex Nut
8	8	ANSI B18.22.1 - 1/2 - wide - Type A	Plain Washer (Inch Type A and B
9	24	ANSI B18.22.1 - 3/4 - narrow - Type A	Plain Washer (Inch Type A and B
10	4	ANSI/ASME B18.2.1 - 3/4-10 UNC - 2.75, HB2	Hex Bolt - UNC (Regular Thread - Inch)
11	2	Hanger Blocking (See Furr-out Detail)	
12	1	Hanger Bm 49-2	
13	2	Knife Plate	
14	1	POST BASE - BM 53-2	
15	1	POST BASE PLATE - BM 55-1	
16	2	POST CAP	
17	10	Stiffener Rib	

BM54 BEAM #54 DETAIL

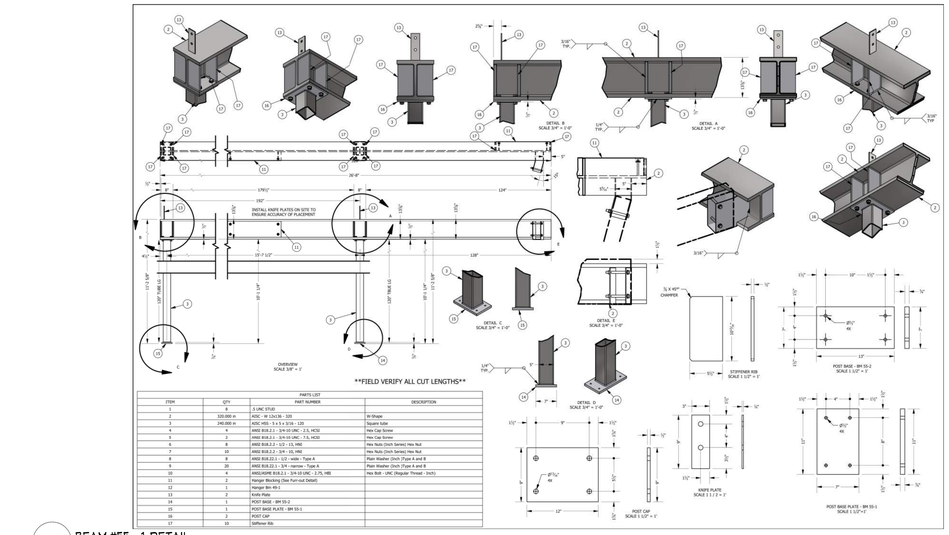

FIELD VERIFY ALL CUT LENGTHS

PARTS LIST			
ITEM	QTY	PART NUMBER	DESCRIPTION
1	8	3 UNC STUD	
2	326.000 in	ASDC - W 12x136 - 330	W-Shape
3	240.000 in	ASDC HSS - 5 x 5 x 3/16 - 120	Square tube
4	4	ANSI B18.2.1 - 3/4-10 UNC - 2.5, HCS2	Hex Cap Screw
5	2	ANSI B18.2.1 - 3/4-10 UNC - 7.5, HCS2	Hex Cap Screw
6	8	ANSI B18.2.2 - 1/2 - 13, HN2	Hex Nuts (Inch Series) Hex Nut
7	10	ANSI B18.2.2 - 3/4 - 10, HN2	Hex Nuts (Inch Series) Hex Nut
8	8	ANSI B18.22.1 - 1/2 - wide - Type A	Plain Washer (Inch Type A and B
9	20	ANSI B18.22.1 - 3/4 - narrow - Type A	Plain Washer (Inch Type A and B
10	4	ANSI/ASME B18.2.1 - 3/4-10 UNC - 3.25, HB2	Hex Bolt - UNC (Regular Thread - Inch)
11	2	Hanger Blocking (See Furr-out Detail)	
12	1	Hanger Bm 49-2	
13	1	Knife Plate	
14	1	POST BASE - BM 55-2	
15	1	POST BASE PLATE - BM 55-1	
16	2	POST CAP	
17	10	Stiffener Rib	

BM55 BEAM #55 - 1 DETAIL

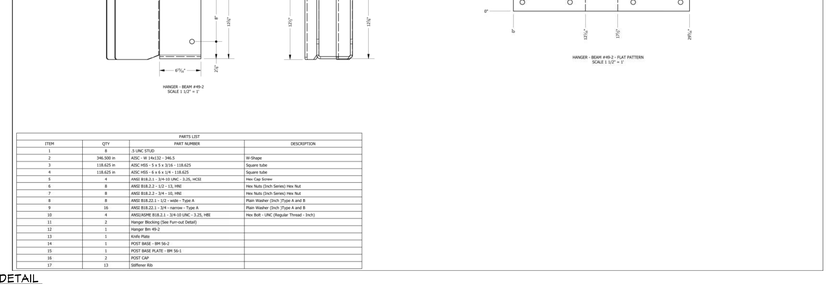

PARTS LIST			
ITEM	QTY	PART NUMBER	DESCRIPTION
1	8	3 UNC STUD	
2	346.500 in	ASDC - W 14x132 - 346.5	W-Shape
3	118.625 in	ASDC HSS - 6 x 6 x 1/4 - 118.625	Square tube
4	118.625 in	ASDC HSS - 6 x 6 x 1/4 - 118.625	Square tube
5	4	ANSI B18.2.1 - 3/4-10 UNC - 3.25, HCS2	Hex Cap Screw
6	8	ANSI B18.2.2 - 1/2 - 13, HN2	Hex Nuts (Inch Series) Hex Nut
7	8	ANSI B18.2.2 - 3/4 - 10, HN2	Hex Nuts (Inch Series) Hex Nut
8	8	ANSI B18.22.1 - 1/2 - wide - Type A	Plain Washer (Inch Type A and B
9	16	ANSI B18.22.1 - 3/4 - narrow - Type A	Plain Washer (Inch Type A and B
10	4	ANSI/ASME B18.2.1 - 3/4-10 UNC - 3.25, HB	Hex Bolt - UNC (Regular Thread - Inch)
11	2	Hanger Blocking (See Furr-out Detail)	
12	1	Hanger Bm 49-2	
13	1	Knife Plate	
14	1	POST BASE - BM 56-2	
15	1	POST BASE PLATE - BM 56-1	
16	2	POST CAP	
17	13	Stiffener Rib	

BM56 BEAM #56 - 1 DETAIL

BEAM #55 - 2 DETAIL

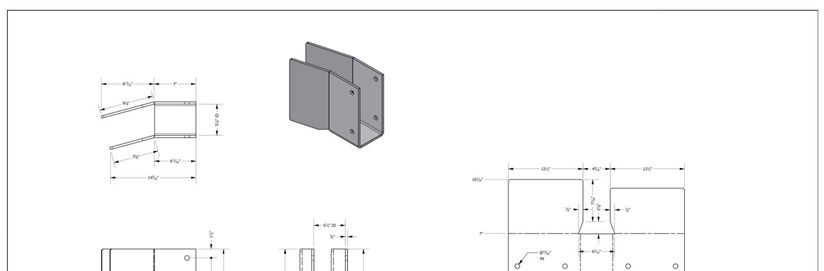

PARTS LIST			
ITEM	QTY	PART NUMBER	DESCRIPTION
1	8	3 UNC STUD	
2	346.500 in	ASDC - W 14x132 - 346.5	W-Shape
3	118.625 in	ASDC HSS - 6 x 6 x 1/4 - 118.625	Square tube
4	118.625 in	ASDC HSS - 6 x 6 x 1/4 - 118.625	Square tube
5	4	ANSI B18.2.1 - 3/4-10 UNC - 3.25, HCS2	Hex Cap Screw
6	8	ANSI B18.2.2 - 1/2 - 13, HN2	Hex Nuts (Inch Series) Hex Nut
7	8	ANSI B18.2.2 - 3/4 - 10, HN2	Hex Nuts (Inch Series) Hex Nut
8	8	ANSI B18.22.1 - 1/2 - wide - Type A	Plain Washer (Inch Type A and B
9	16	ANSI B18.22.1 - 3/4 - narrow - Type A	Plain Washer (Inch Type A and B
10	4	ANSI/ASME B18.2.1 - 3/4-10 UNC - 3.25, HB	Hex Bolt - UNC (Regular Thread - Inch)
11	2	Hanger Blocking (See Furr-out Detail)	
12	1	Hanger Bm 49-2	
13	1	Knife Plate	
14	1	POST BASE - BM 56-2	
15	1	POST BASE PLATE - BM 56-1	
16	2	POST CAP	
17	13	Stiffener Rib	

BEAM #56 - 2 DETAIL

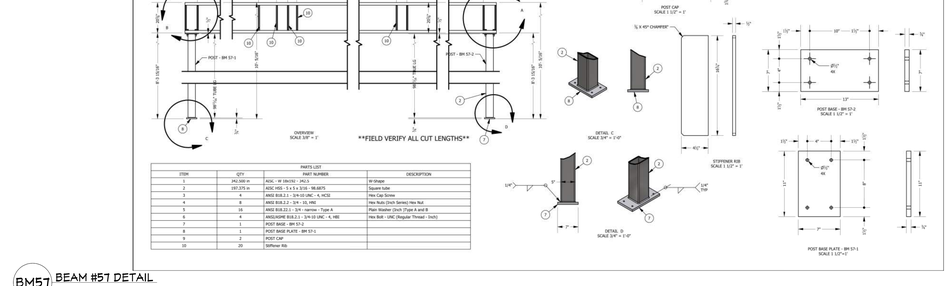

FIELD VERIFY ALL CUT LENGTHS

PARTS LIST			
ITEM	QTY	PART NUMBER	DESCRIPTION
1	242.500 in	ASDC - W 19x131 - 242.5	W-Shape
2	197.375 in	ASDC HSS - 5 x 5 x 3/16 - 196.8875	Square tube
3	4	ANSI B18.2.1 - 3/4-10 UNC - 4, HCS2	Hex Cap Screw
4	8	ANSI B18.2.2 - 3/4 - 10, HN2	Hex Nuts (Inch Series) Hex Nut
5	16	ANSI B18.22.1 - 3/4 - narrow - Type A	Plain Washer (Inch Type A and B
6	4	ANSI/ASME B18.2.1 - 3/4-10 UNC - 4, HB2	Hex Bolt - UNC (Regular Thread - Inch)
7	1	POST BASE - BM 57-2	
8	1	POST BASE PLATE - BM 57-1	
9	2	POST CAP	
10	20	Stiffener Rib	

BM57 BEAM #57 DETAIL

SHEET INDEX	
PAGE	TITLE
A1	COVER SHEET
A2	SITE PLAN
A3	LANDSCAPE PLAN - OVERVIEW
A4	LANDSCAPE PLAN - ENLARGED
A5	IRRIGATION PLAN
A6	FLOOR PLAN - 1ST LEVEL
A7	FLOOR PLAN - BASEMENT
A8	FOUNDATION
A9	DETAIL VIEWS
A10	FABRICATED COLUMN CAPS
A11	STEEL BEAM DETAILS
A12	STEEL BEAM DETAILS
A13	STEEL BEAM DETAILS
A14	WALL BRACING - 1ST LEVEL
A15	WALL BRACING - BASEMENT
A16	FLOOR LAYOUT - 1ST LEVEL
A17	ROOF LAYOUT - BASEMENT
A18	ROOF LAYOUT - 1ST LEVEL
A19	ROOF LAYOUT - OVERVIEW
A20	ELEVATIONS
A21	ELEVATIONS
A22	SECTION VIEWS
A23	SECTION VIEWS
A24	SECTION VIEWS
A25	SECTION VIEWS
A26	SECTION VIEWS
A27	SECTION VIEWS
E1	ELECTRICAL - 1ST LEVEL
E2	ELECTRICAL - BASEMENT

NOT FOR CONSTRUCTION

BEAM SCHEDULE (STEEL NAILER DETAIL FOR STEEL BEAMS WHERE APPLICABLE)						
MK	PLIES	TYPE	PLATE LEN +/- MIN END	TOP BEAM	B.O. BEAM	CALC #
B01	2	1	(B-L4) 2 3/4 X 11 7/8 ABOVE TOP FL	2'-0"	2'-0 7/8"	1
B02	2	1	(B-L22) 12 5/16 x 12 1/2 (V1)(2)SBJ A992-50	28'-4"	21'-5"	2
B03	2	1	(B-D5) 5 3/4 X 15	15'-6"	24'-3 7/8"	3
B04	2	1	(B-D4) 5 3/4 X 15	17'-6"	24'-3 7/8"	4
B05	2	1	(B-D4) 5 3/4 X 15	17'-6"	26'-11 7/8"	5
B06	2	1	(B-D6) 5 3/4 X 21	30'-8"	28'-2 1/8"	6
B07	2	1	(B-D7) 5 3/4 X 21	30'-1 3/8"	28'-2 1/8"	7
B08	2	1	(B-D5) 5 3/4 X 21	30'-1 3/8"	24'-11 5/8"	8
B09	2	1	(B-D3) 5 3/4 X 18	27'-1 1/2"	24'-3 5/8"	9
B10	2	1	(B-D3) 5 3/4 X 18	27'-1 1/2"	28'-11 5/8"	10
B11	1	1	(B-13)	11'-3 1/8"	10'-1 1/8"	11
B12	2	1	(B-32) 8 3/4 X 24	31'-1 1/8"	29'-1 1/8"	12
B13	2	1	(B-13) 5 3/4 X 30	24'-6 1/4"	21'-2"	13
B14	2	1	(B-14) 5 3/4 X 30	27'-10 3/4"	24'-4"	14
B15	2	1	(B-15) 5 3/4 X 30	28'-8"	25'-2"	15
B16	2	1	(B-16) 5 3/4 X 31 1/2	28'-8"	24'-10 1/8"	16
B17	2	1	(B-13) 5 3/4 X 24	24'-5 3/8"	22'-3 7/8"	17
B18	2	1	(B-13) 8 1/2 X 21	17'-1 5/8"	29'-2 1/4"	18
B19	1	1	(B-13)		10'-1 1/8"	19
B20	2	1	(B-20)	12'-3 1/8"	6'-4 1/8"	20
B21	2	1	(B-21) 5 3/4 X 13	9'-8"	24'-4 5/8"	21
B22	2	1	(B-22) 5 3/4 X 13	6'-4"	22'-10 5/8"	22
B23	2	1	(B-23) 5 3/4 X 13	9'-3 3/8"	24'-4 5/8"	23
B24	2	1	(B-24) 5 3/4 X 13	6'-2"	22'-10 1/8"	24
B25	1	3	(B-25) 7 3/4 X 16	11'-11 1/8"	11'-9 1/8"	25
B26	1	3	(B-26) 7 3/4 X 16	11'-9 1/8"	10'-1 1/8"	26
B27	2	1	(B-27) 7 3/4 X 24 3/16 (V1)2 X 60 A992-50	41'-9"	29'-1 1/8"	27
B28	2	1	(B-28) 5 3/4 X 13	11'-9"	10'-1 1/8"	28
B29	1	1	(B-29) 5 3/4 X 14	15'-11 5/8"	12'-1 1/8"	29
B30	1	1	(B-30)		10'-1 1/8"	30
B31	1	1	(B-31)		2'-2 1/8"	31
B32	1	1	(B-32) 8 3/4 X 13	12'-10 3/4"	11'-1 1/8"	32
B33	1	1	(B-33)			33
B34	1	3	(B-34) 5 3/4 X 13	22'-2 7/8"	11'-1 1/8"	34
B35	1	1	(B-35)			35
B36	1	1	(B-36)			36
B37	1	2	(B-37) 3 3/4 X 11 7/8	4'-1 3/4"	10'-1 1/8"	37
B38	2	2	(B-38) 3 3/4 X 11 7/8	4'-11 1/2"	22'-2 3/4"	38
B39	1	1	(B-39) 3 3/4 X 13	14'-3 1/4"	13'-1 1/8"	39
B40	1	1	(B-40) 3 3/4 X 13	14'-3 1/4"	12'-1 1/8"	40
B41	1	3	(B-41) 3 3/4 X 11 1/2	16'-2 3/4"	10'-1 1/8"	41
B42	1	1	(B-42) 3 3/4 X 11 1/2	16'	12'-1 5/8"	42
B43	1	3	(B-43) 3 3/4 X 13	14'-3 1/4"	13'-1 1/8"	43
B44	1	1	(B-44)			44
B45	1	1	(B-45) 5 1/2 X 15	17'-8 1/2"	11'-8 1/8"	45
B46	1	1	(B-46)			46
B47	1	1	(B-47) 3 1/2 X 15	10'-11"	10'-3 1/8"	47
B48	1	1	(B-48) 3 1/2 X 15	10'-3 1/2"	11'-8 1/8"	48
B49	1	1	(B-49) 5 1/2 X 15	17'-3 3/4"	11'-5 5/8"	49
B50	1	1	(B-50)		12'-2 5/8"	50
B51	1	1	(B-51) 5 1/2 X 15	11'-9"	10'-1 1/8"	51
B52	1	1	(B-52) 3 3/4 X 15	14'	10'-4 1/8"	52
B53	1	1	(B-53)			53
B54	1	1	(B-54)			54
B55	1	1	(B-55)			55
B56	1	1	(B-56)			56
B57	1	1	(B-57)			57
B58	2	1	(B-58) 7 3/4 X 14	11'-3 1/8"	10'-1 1/8"	58
B59	2	1	(B-59) 5 3/4 X 13 1/2	12'-11 1/8"	22'-3 1/8"	59
B60	2	1	(B-60) 5 3/4 X 15	16'-1 1/4"	18'-1 1/8"	60
B61	2	1	(B-61) 5 3/4 X 13	15'-1 1/4"	25'-8 3/4"	61

SCAN FOR CURRENT PLAN
SCAN FOR ENGINEERED CALCS
SCAN FOR 3D FRAMING MODEL

ENGINEER STAMP AREA

PROJECT NO.
25-017

LEGACY RANCH LOT #13
ADAMS CO., ID

CONTRACTOR TO VERIFY ALL DETAILS, DIMENSIONS, AND SPECIFICATIONS. ANY DISCREPANCIES TO BE REPORTED TO THE ARCHITECT AND ENGINEER. ANY ASSUMPTIONS MADE BY THE CONTRACTOR BECAUSE OF DISCREPANCIES, OMISSIONS OR CONFLICTS IN THE DESIGN DOCUMENTS SHALL BE RESOLVED BY THE CONTRACTOR AT NO ADDITIONAL COST TO THE OWNER. THE CONTRACTOR SHALL BE RESPONSIBLE FOR ALL CONSTRUCTION MEANS, METHODS, TECHNIQUES, SEQUENCES AND PROCEDURES AND FOR COORDINATING ALL PORTIONS OF THE WORK. THE CONTRACTOR SHALL INDEMNIFY AND HOLD HARMLESS THE OWNER AND ARCHITECT FROM ANY CLAIMS, LITIGATIONS OR SUITS THAT MAY ARISE DURING CONSTRUCTION OR ANYTIME THEREAFTER.

SHEET SIZE
ARCH E2 (36" x 54")

INITIAL DATE: 11/14/2025
PRINT DATE: 11/17/2026

DRAWN BY:
Steve

STEEL BEAM DETAILS

SMC Design
208.249.7268
Nampa, ID

SHEET NUMBER
A13
PAGE 13

PRELIMINARY
NOT FOR CONSTRUCTION

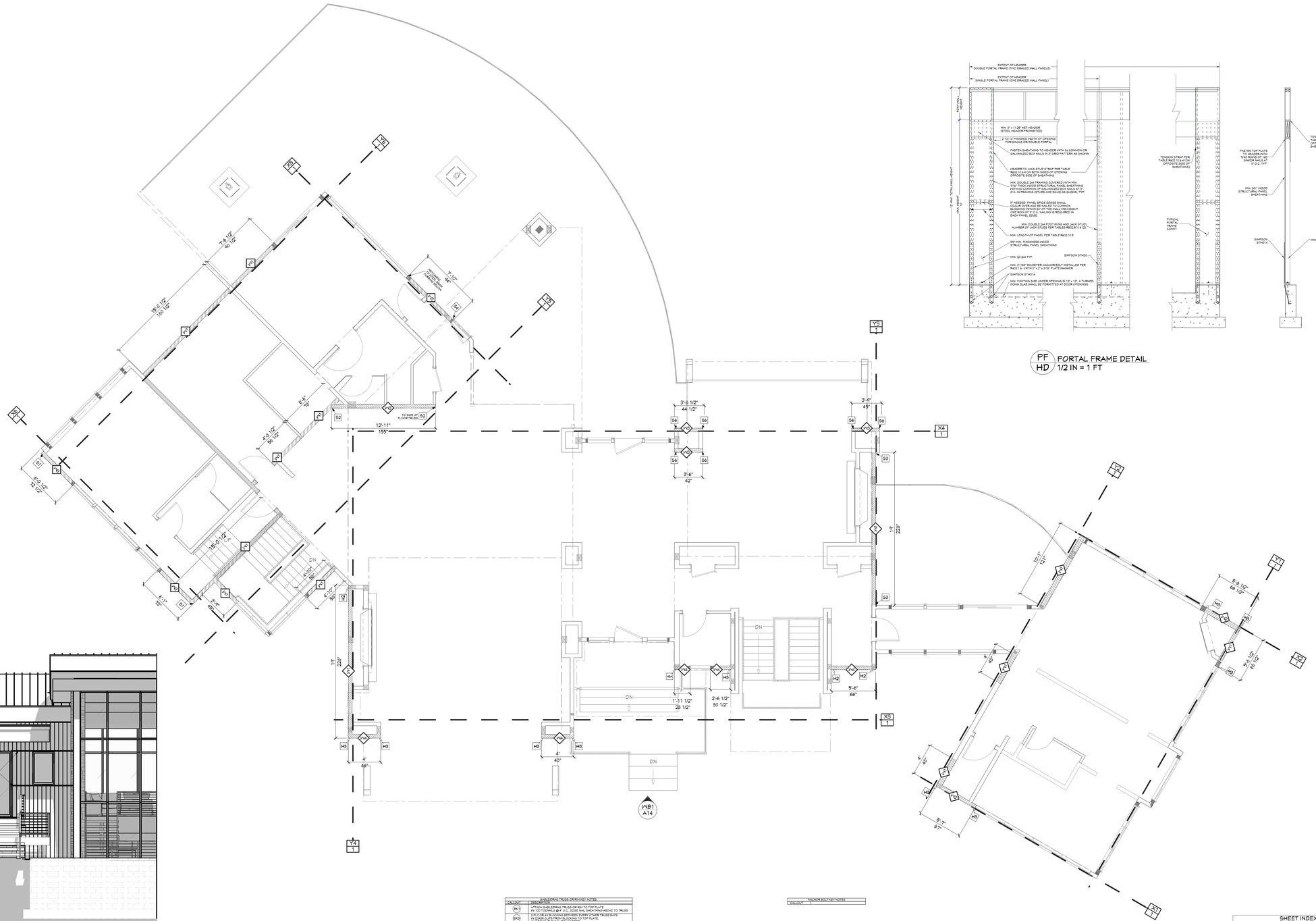

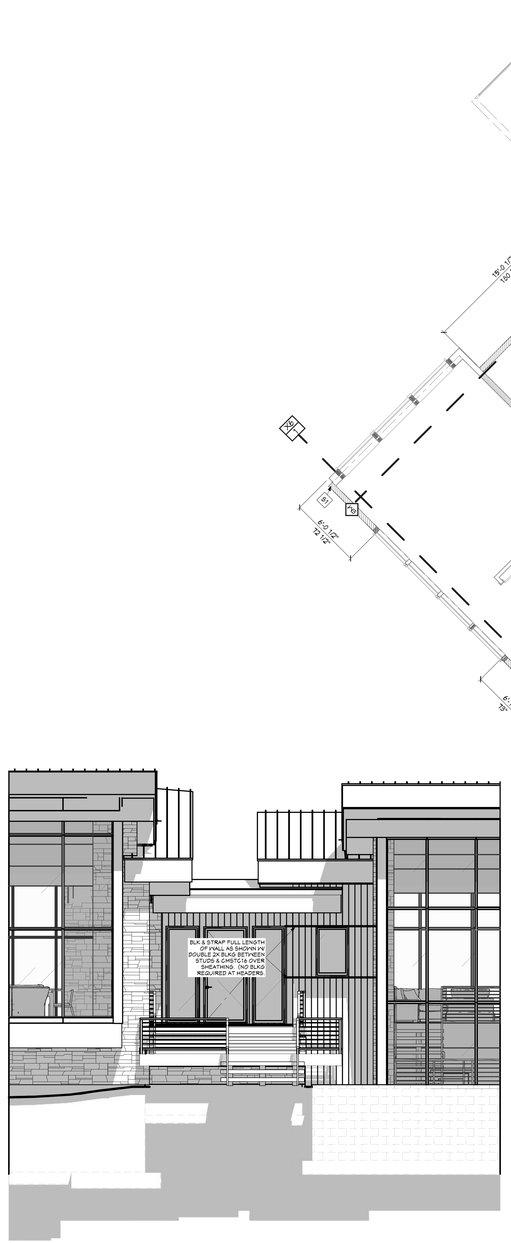

WB1 VIEW WB1 - WB1
1/4 IN = 1 FT

WALL BRACING PLAN - 2ND LEVEL
1/4 IN = 1 FT

PF / HD PORTAL FRAME DETAIL
1/2 IN = 1 FT

SHEAR SCHEDULE				
CALLOUT	STRAP TYPE	STRAP FASTENERS	ROOF RAFTERS	COMMENTS
S1	MSTC28	(18) 16D SINKERS	2	
S2	MSTC40	(32) 16D SINKERS	2	
S3	MSTC52	(40) 16D SINKERS	2	
S4	MSTC66	(66) 16D SINKERS	2	
S6	SCMST12	(16) 16D SINKERS	2	(DFH1 POST MIN.)

HOLD-DOWN SCHEDULE				
CALLOUT	STRAP TYPE	FASTENERS	ROOF STORY	
H1	LSTHD10 (NU WHERE APPLICABLE)	(20) 16D SINKERS	2	
H2	STHD10 (NU WHERE APPLICABLE)	(24) 16D SINKERS	2	
H2A	HDU2-SDS2.5 FIV SIMPSON OR PAB4 @ INT. FONY WALLS	(6) 1/4" X 2-1/2" SDS	2	
H3	STHD14 (NU WHERE APPLICABLE)	(30) 16D SINKERS	2	
H3A	HDU5-SDS2.5 FIV SS SIMPSON OR PAB5 @ INT. FONY WALLS	(14) 1/4" X 2-1/2" SDS	2	
H4	HDU8-SDS2.5 FIV SS SIMPSON OR PAB7 @ INT. FONY WALLS	(20) 1/4" X 2-1/2" SDS	3	
H6	HDU14-SDS2.5 FIV SS	(36) 1/4" X 2-1/2" SDS	4	

ANCHOR BOLT KEY NOTES
CALLOUT

JOIST/RAFTER/TRUSS TO WALL KEY NOTES	
CALLOUT	DESCRIPTION
SK1	ATTACH GABLE/END TRUSS OR RAFTER TO TOP PLATE PER 102 TOENAILS @ 6" O.C., EDGE NAIL SHEATHING ABOVE TO TRUSS
SK2	2"x"1" OR 2X BLOCKING BETWEEN EVERY OTHER TRUSS BAYS PER 102 TOENAILS @ 6" O.C. TOENAILED TO TOP PLATE. (4) 2 BLOCKS @ 2'-0 O.C. STAGGERED
SK4	2"x"1" OR 4X BLOCKING BETWEEN EVERY OTHER TRUSS BAYS PER 102 TOENAILS @ 6" O.C. TOENAILED TO TOP PLATE. (4) 2 BLOCKS @ 2'-0 O.C. STAGGERED
T1	ATTACH GABLE/END TRUSS OR RAFTER TO TOP PLATE PER 102 TOENAILS @ 6" O.C., EDGE NAIL SHEATHING ABOVE TO TRUSS
T4	ATTACH GABLE / DRAG TRUSS OR RAFTER TO TOP PLATE PER AS @ 24" O.C., EDGE NAIL SHEATHING ABOVE TO TRUSS OR RAFTER

TYP. NOTES
1. ALL SHEATHING PANEL EDGES SHALL BE BLOCKED UNO
2. PROVIDE SAME NAILING PATTERN ABOVE AND BELOW OPENINGS AS ADJACENT SHEAR PANEL
3. ALL EXTERIOR WALLS SHALL BE SHEARWALL "SW1" (WITHOUT BLKG UNO
4. FASTEN GABLE/END TO SHEAR WALLS BELOW/FIV 102 TOENAILS @ 12" O.C. UNO
5. FASTEN TRUSS HEELS TO SHEAR WALLS PER H2 SA AND (2) 10D TOENAILS @ EACH
6. SYP BOARD SHEAR WALLS MAY BE SUBSTITUTED FOR OSB SHEAR WALL @ CONTRACTOR'S OPTION
7. WALL SHEATHING CAN BE APPLIED TO EITHER SIDE OF THE WALL UNO

ENGINEERED SHEAR WALL						
BWP	SHEATHING	SIDES OF WALL	SHEET NAILING		SHEET STAPLING	BLKG	NAILING UNO (BOTTOM FLT INTO RIM)
FIV	7/16" APA RATED	1	8D @ 6/12	OR	16GA X 1-1/2" @ 3/12	YES	(2) 16D NAILS PER 16" BAY
FIV	7/16" APA RATED	1	8D @ 4/12	OR	16GA X 1-1/2" @ 2/12	YES	(3) 16D NAILS PER 16" BAY
FIV	7/16" APA RATED	1	8D @ 3/12			YES	(4) 16D NAILS PER 16" BAY
FIV	7/16" APA RATED	1	8D @ 2/12	OR	4X STUDS @ SHEATHING PERIMETER	YES	(4) SDS SCREWS PER 16" BAY
SEE PLAN	SEE PORTAL FRAME FIV HOLD DOWNS DETAIL						
FIV	7/16" APA RATED	2	8D @ 5/12			YES	(5) SDS SCREWS PER 16" BAY

SHEET INDEX	
PAGE	TITLE
A1	COVER SHEET
A2	SITE PLAN
A3	LANDSCAPE PLAN - OVERVIEW
A4	LANDSCAPE PLAN - ENLARGED
A5	IRRIGATION PLAN
A6	FLOOR PLAN - 1ST LEVEL
A7	FLOOR PLAN - BASEMENT
A8	FOUNDATION
A9	DETAIL VIEWS
A10	FABRICATED COLUMN CAPS
A11	STEEL BEAM DETAILS
A12	STEEL BEAM DETAILS
A13	STEEL BEAM DETAILS
A14	WALL BRACING - 1ST LEVEL
A15	WALL BRACING - BASEMENT
A16	FLOOR LAYOUT - 1ST LEVEL
A17	ROOF LAYOUT - BASEMENT
A18	ROOF LAYOUT - 1ST LEVEL
A19	ROOF LAYOUT - OVERVIEW
A20	ELEVATIONS
A21	ELEVATIONS
A22	SECTION VIEWS
A23	SECTION VIEWS
A24	SECTION VIEWS
A25	SECTION VIEWS
A26	SECTION VIEWS
A27	SECTION VIEWS
E1	ELECTRICAL - 1ST LEVEL
E2	ELECTRICAL - BASEMENT

NOT FOR CONSTRUCTION

SCAN FOR CURRENT PLAN

SCAN FOR ENGINEERED CALCS

SCAN FOR 3D FRAMING MODEL

ENGINEER STAMP AREA

PROJECT NO.
25-017

CONTRACTOR TO VERIFY ALL DETAILS, DIMENSIONS, AND DESCRIPTIONS PRIOR CONSTRUCTION AND REPORT ANY DISCREPANCIES TO SMC DESIGN. SMC DESIGN IS NOT RESPONSIBLE FOR CONSTRUCTION METHODS AND WORKMANSHIP. CONTRACTOR AGREES TO HOLD HARMLESS AND INDEMNIFY SMC DESIGN FROM ANY CLAIMS, LITIGATIONS OR SUITS THAT MAY ARISE DURING CONSTRUCTION OR ANYTIME THEREAFTER.

LEGACY RANCH LOT #13
ADAMS CO., ID

SHEET SIZE: ARCH E2 (36" x 54")

INITIAL DATE: 11/14/2025
PRINT DATE: 11/17/2026

DRAWN BY: Steve

WALL BRACING - 1ST LEVEL

SMC Design
208.249.7288
Nampa, ID

SHEET NUMBER
A14
PAGE 14

PRELIMINARY
NOT FOR CONSTRUCTION

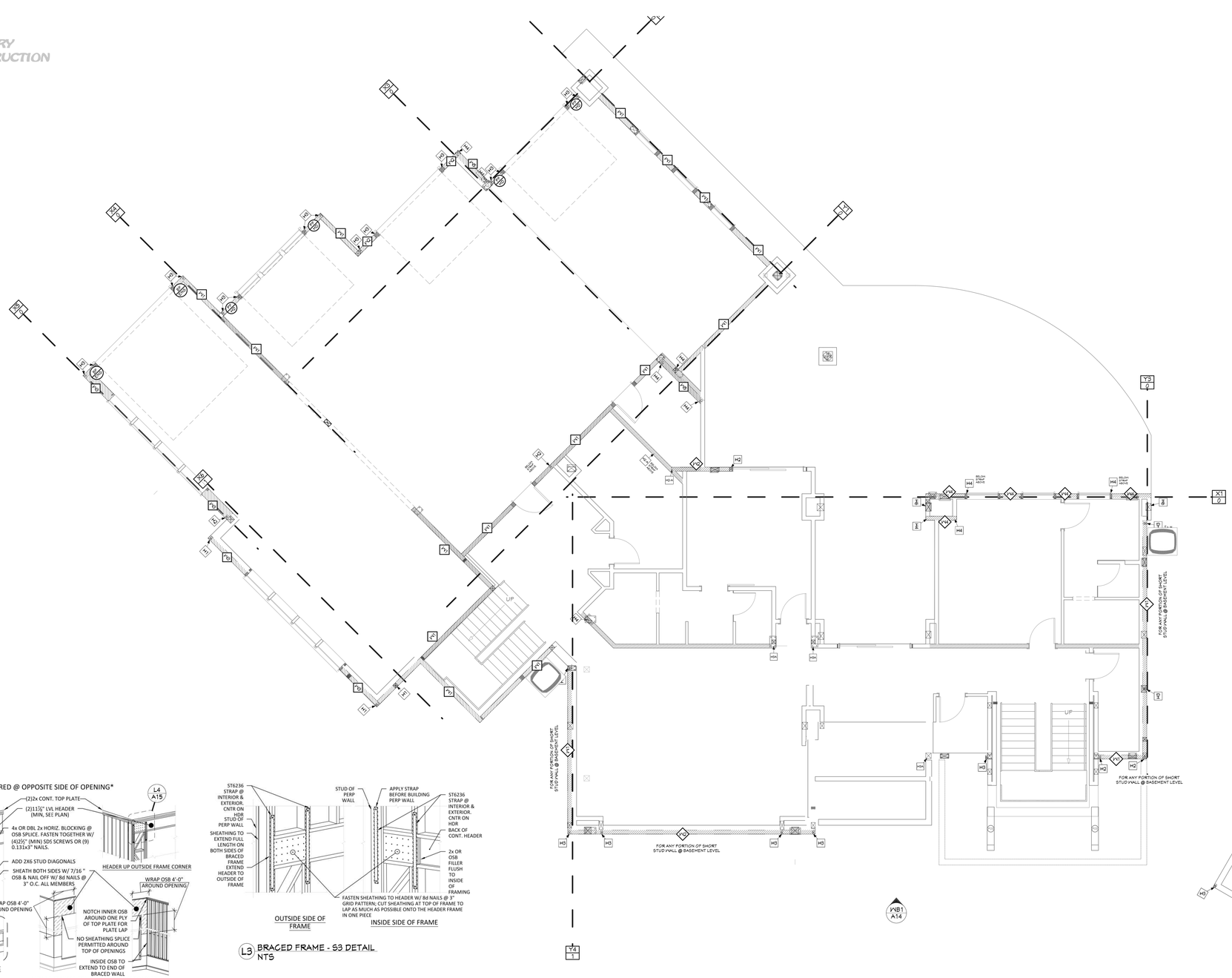

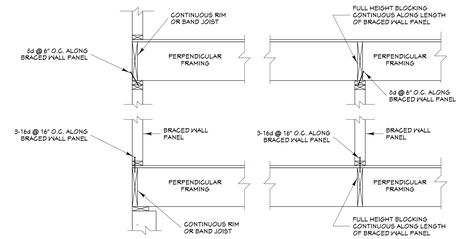

BRACED WALL CONNECTION WHEN PERPENDICULAR TO FLOOR/CEILING FRAMING
SCALE: 3/4 in = 1 ft

DETAILS BWP DETAIL
3/4 IN = 1 FT

L1 BRACED FRAME - S1 DETAIL
NTS

L3 BRACED FRAME - S3 DETAIL
NTS

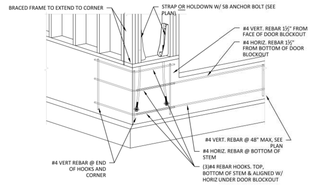

L2 BRACED FRAME - S2 DETAIL
NTS

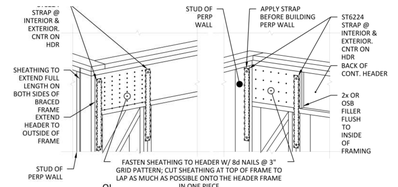

L4 BRACED FRAME - S4 DETAIL
NTS

ADDITIONAL TRUSS OR RIM EDGE NOTES	
CALLOUT	DESCRIPTION
(H-1)	ATTACH SHELDEWALL TRUSS OR RIM TO TOP PLATE PER UNO TOENAILS @ 6" O.C. EDGE NAIL SHEATHING ABOVE TO TRUSS
(H-2)	24" LOOK OUT BLOCKING PER SHEET DETAIL ATTACH SHELDEWALL TRUSS OR RIM BLOCKING TO TOP PLATE PER 8 NAILS @ 6" O.C. (STAGGERED)
(H-4)	24" LOOK OUT BLOCKING PER SHEET DETAIL ATTACH SHELDEWALL TRUSS OR RIM BLOCKING TO TOP PLATE PER 8 NAILS @ 6" O.C. (STAGGERED)
(Y-1)	ATTACH SHELDEWALL TRUSS OR RIM TO TOP PLATE PER UNO TOENAILS @ 6" O.C. EDGE NAIL SHEATHING ABOVE TO TRUSS
(Y-4)	ATTACH GABLE / END TRUSS OR RIM TO TOP PLATE PER NAILS @ 6" O.C. EDGE NAIL SHEATHING ABOVE TO TRUSS OR RIM

STRAP SCHEDULE				
CALLOUT	STRAP TYPE	STRAP FASTENERS	ROOF STUDS	COMMENTS
S1	MSTC28	(18) 10D SINKERS	2	
S2	MSTC40	(32) 10D SINKERS	2	
S3	MSTC52	(40) 10D SINKERS	2	
S4	MSTC66	(66) 10D SINKERS	2	
S6	SCMST12	(90) 10D SINKERS	2	(DFH1 POST MIN.)

ANCHOR BOLT CALLOUTS	
CALLOUT	TYPE

HOLD-DOWN SCHEDULE			
CALLOUT	STRAP TYPE	FASTENERS	ROOF STUDS
H1	LSTHD10 (RU-WHERE APPLICABLE)	(20) 16D SINKERS	2
H2	STHD10 (RU-WHERE APPLICABLE)	(24) 16D SINKERS	2
H2A	HOLD-DOWN PER SIMPSON OR PABR @ INT. POINT WALLS	(8) 1/4" X 2-1/2" SDS	2
H3	STHD14 (RU-WHERE APPLICABLE)	(30) 16D SINKERS	2
H3A	HOLD-DOWN PER SIMPSON OR PABR @ INT. POINT WALLS	(14) 1/4" X 2-1/2" SDS	2
H4	HDU4-SDS2.5 HOLD-DOWN OR PABT @ INT. POINT WALLS	(20) 1/4" X 2-1/2" SDS	3
H6	HDU14-SDS2.5 V458 1X30	(36) 1/4" X 2-1/2" SDS	4

WALL BRACING PLAN - BASEMENT
1/4 IN = 1 FT

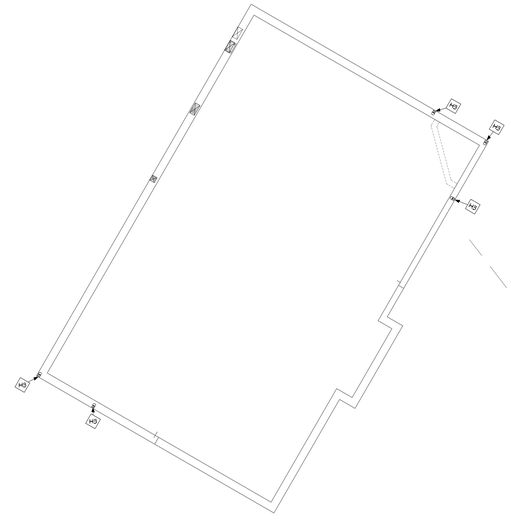

TYP. NOTES
1. ALL SHEATHING PANEL EDGES SHALL BE BLOCKED UNO
2. SHEATHING PANEL PATTERN ABOVE AND BELOW OPENINGS AS ADJACENT SHEAR PANEL
3. ALL EXTERIOR WALLS SHALL BE SHEAR WALL "SPW1" WITHOUT BLKG UNO
4. FASTEN GABLE/RIM TO SHEAR WALLS BELOW PER 10D TOENAILS @ 12" O.C. UNO
5. FASTEN TRUSS HEELS TO SHEAR WALLS PER H2.5A AND (2) 10D TOENAILS @ EACH
6. GYP BOARD SHEAR WALLS MAY BE SUBSTITUTED WITH AN SPW1 SHEAR WALL @ CONTRACTOR'S OPTION
7. WALL SHEATHING CAN BE APPLIED TO EITHER SIDE OF THE WALL UNO

BWP	SHEATHING	ENGINEERED SHEAR WALL SIDES OF WALL	SHEET NAILING	SHEET STAPLING	BLKG	NAILING UNO (BOTTOM PLT INTO RIM)
PW1	7/16" APA RATED	1	8D @ 6/12	GR 18GA X 1-1/2" @ 3/12	YES	(2) 16D NAILS PER 16" BAY
PW2	7/16" APA RATED	1	8D @ 4/12	GR 18GA X 1-1/2" @ 2/12	YES	(3) 16D NAILS PER 16" BAY
PW3	7/16" APA RATED	1	8D @ 3/12		YES	(4) 16D NAILS PER 16" BAY
PW4	7/16" APA RATED	1	8D @ 2/12	GR 4X STUDS @ SHEATHING PERIMETER	YES	(4) SDS SCREWS PER 16" BAY
SEE PORTAL FRAME PW HOLD DOWNS DETAIL	SEE PORTAL FRAME PW HOLD DOWNS DETAIL					
PW5	7/16" APA RATED	2	8D @ 3/12		YES	(5) SDS SCREWS PER 16" BAY

SHEET INDEX	
PAGE	TITLE
A1	COVER SHEET
A2	SITE PLAN
A3	LANDSCAPE PLAN - OVERVIEW
A4	LANDSCAPE PLAN - ENLARGED
A5	IRRIGATION PLAN
A6	FLOOR PLAN - 1ST LEVEL
A7	FLOOR PLAN - BASEMENT
A8	FOUNDATION
A9	DETAIL VIEWS
A10	FABRICATED COLUMN CAPS
A11	STEEL BEAM DETAILS
A12	STEEL BEAM DETAILS
A13	STEEL BEAM DETAILS
A14	WALL BRACING - 1ST LEVEL
A15	WALL BRACING - BASEMENT
A16	FLOOR LAYOUT - 1ST LEVEL
A17	ROOF LAYOUT - BASEMENT
A18	ROOF LAYOUT - 1ST LEVEL
A19	ROOF LAYOUT - OVERVIEW
A20	ELEVATIONS
A21	ELEVATIONS
A22	SECTION VIEWS
A23	SECTION VIEWS
A24	SECTION VIEWS
A25	SECTION VIEWS
A26	SECTION VIEWS
A27	SECTION VIEWS
E1	ELECTRICAL - 1ST LEVEL
E2	ELECTRICAL - BASEMENT

SCAN FOR CURRENT PLAN

SCAN FOR ENGINEERED CALCS

SCAN FOR 3D FRAMING MODEL

ENGINEER STAMP AREA

PROJECT NO.
25-017

CONTRACTOR TO VERIFY ALL DETAILS, DIMENSIONS, AND SPECIFICATIONS PRIOR CONSTRUCTION AND REPORT ANY DISCREPANCIES TO SMC ENGINEERS. SMC ENGINEERS IS NOT RESPONSIBLE FOR CONSTRUCTION MEANS, METHODS, TECHNIQUES, SEQUENCES OR PROCEDURES OF CONSTRUCTION AND/OR SAFETY PRECAUTIONS AND PROGRAMS IN CONNECTION WITH THE CONSTRUCTION. SMC ENGINEERS SHALL NOT BE RESPONSIBLE FOR ANY ACTS OR OMISSIONS OF THE CONTRACTOR, SUBCONTRACTOR, ANY OF THEIR AGENTS OR EMPLOYEES, OR ANY OTHER PERSONS PERFORMING ANY OF THE CONSTRUCTION WORK OR ANY PART OF THE CONSTRUCTION. SMC ENGINEERS SHALL NOT BE RESPONSIBLE FOR THE CONTRACTOR'S FAILURE TO CARRY OUT THE CONSTRUCTION IN ACCORDANCE WITH THE CONTRACT DOCUMENTS. SMC ENGINEERS SHALL NOT BE RESPONSIBLE FOR THE CONTRACTOR'S FAILURE TO PERFORM ANY CONSTRUCTION WORK IN ACCORDANCE WITH THE CONTRACT DOCUMENTS. SMC ENGINEERS SHALL NOT BE RESPONSIBLE FOR THE CONTRACTOR'S FAILURE TO PERFORM ANY CONSTRUCTION WORK IN ACCORDANCE WITH THE CONTRACT DOCUMENTS. SMC ENGINEERS SHALL NOT BE RESPONSIBLE FOR THE CONTRACTOR'S FAILURE TO PERFORM ANY CONSTRUCTION WORK IN ACCORDANCE WITH THE CONTRACT DOCUMENTS.

LEGACY RANCH LOT #13
ADAMS CO., ID

SHEET SIZE
ARCH E2 (36" x 54")

INITIAL DATE: 11/19/2025
PRINT DATE: 11/17/2026

DRAWN BY:
Steve

WALL BRACING - BASEMENT

SMC Design
SMC Design
208.249.1286
Nampa, ID

SHEET NUMBER
A15
PAGE 15

NOT FOR CONSTRUCTION

PRELIMINARY
NOT FOR CONSTRUCTION



FLOOR FRAMING - 1ST LEVEL - FRONT

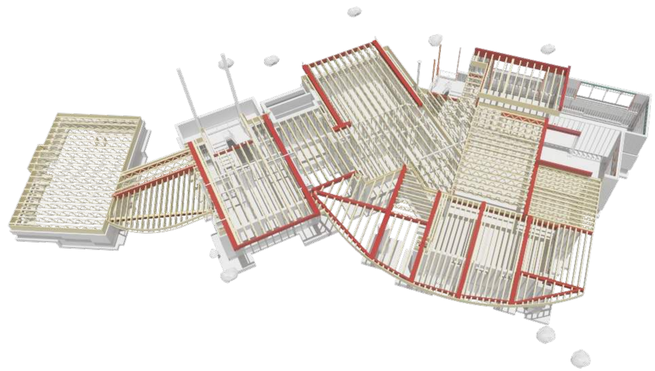

FLOOR FRAMING - 1ST LEVEL - REAR

POST SCHEDULE			
NO	QTY	FLR	NOTES
P01	4	2	6X6 D.F. #2
P02	2	2	6X10
P03	2	1	6X10 D.F. #2
P04	1	2	4 1/2 X 5 1/2
P05	1	2	10X10
P06	1	2	POST - 6X6 #2
P07	1	2	POST - 6X6 #1
P08	1	2	POST - 6X6 #2
P09	2	1	POST - 6X6 #1
P10	1	1	POST - 6M 19-1
P11	1	1	POST - 6M 19-2
P12	1	2	POST - 6M 6D-1
P13	1	2	POST - 6M 6D-2
P14	1	1	POST - 6M 6T-2
P15	1	1	POST - 6M 6T-3
P16	1	1	POST - 6M 6T-4
P17	1	1	POST - 6M 6T-5
P18	1	1	POST - 6M 6D-2
P19	1	1	POST - 6M 31-1
P20	1	1	POST - 6M 39-1

* ALL BEARING TO HAVE SOLID BEARING TO FOUNDATION	
BEARING SCHEDULE	
NO	BEARING AREA (SI)
A01	4 - 2X6 POST
A02	3 - 2X6 POST
A03	6X6 POST
A04	6X10 POST
A05	6X12 POST
A06	6X12 POST
A07	6X12 POST
A08	6X12 POST
A09	6X12 POST
A10	10X10 POST

GABLE/GRAD TRUSS OR RCH KEY NOTES:	
CALLOUT	DESCRIPTION
	ATTACH GABLE/GRAD TRUSS OR RCH TO TOP PLATE AT 100 TOENAILS @ 6" O.C., EDGE NAIL SHEATHING ABOVE TO TRUSS
	2-PLY OR 4X BLOCKING BETWEEN EVERY OTHER TRUSS SPACE AT GABLE CLIP FROM BLOCKING TO TOP PLATE
	2-PLY OR 4X BLOCKING BETWEEN EVERY OTHER TRUSS SPACE AT GABLE END TRUSS BLOCKING TO TOP PLATE
	ATTACH GABLE/GRAD TRUSS OR RCH TO TOP PLATE AT 100 TOENAILS @ 6" O.C., EDGE NAIL SHEATHING ABOVE TO TRUSS
	ATTACH GABLE / GRAD TRUSS OR RCH TO TOP PLATE AT 400 @ 22" O.C., EDGE NAIL SHEATHING ABOVE TO TRUSS OR RCH

HANGER SCHEDULE				
CALLOUT	MODEL	TOP NAILS	SKEW	MEMBER NAILS	FACE NAILS
S01	SUR/W	N/A	45°		
S02	HGUS.25-SDS HH15	N/A	2.00°	(24) 1/4" X 2 1/2" SDS	(36) 1/4" X 2 1/2" SDS
S03	HGUS.25-SDS HH15	N/A	2.00°	(24) 1/4" X 2 1/2" SDS (SKEW)	(36) 1/4" X 2 1/2" SDS SCREW
S04	HGUS.25X (QTY) HH15 (SKEW)	N/A	2.00°	(36) 1/4" X 2 1/2" SDS	(36) 1/4" X 2 1/2" SDS
S05	HGUS.25-SDS	N/A	2.00°	(6) 1/4" X 2 1/2" SDS	(14) 1/4" X 2 1/2" SDS
S06	SUR/S.SKIT @ HANGERS	N/A	2.00°		
S07	LSU2.25X-SDS HH15	N/A	2.00°	(12) 1/4" X 2 1/2" SDS	(16) 1/4" X 2 1/2" SDS
S08	LSU2.25X-SDS HH15 (SKEW)	N/A	2.00°	(12) 1/4" X 2 1/2" SDS	(16) 1/4" X 2 1/2" SDS
S09	U05/8	N/A	2.00°	(4) 10d x 1 1/2"	(4) 10d x 1 1/2"

HEADER SCHEDULE	
NO	TYPE
HS01	(1) 4X6 D.F.
HS02	(1) 5 1/4 X 13 1/2 GLM
HS03	(1) 5 1/4 X 15 1/2 GLM
HS04	(1) 6X10 D.F.
HS05	(1) 6X12 D.F.
HS06	(2) 1.75X9.25 LVL
HS07	(3) 1.75X14 LVL
HS08	(3) 1.75X16 LVL
HS09	(3) 1.75X11 7/8 LVL
HS10	(3) 1.75X11 7/8 LVL
HS11	(3) 1.75X14 LVL
HS12	(3) 1.75X14 LVL

BEAM SCHEDULE (SEE STEEL NAILER DETAIL FOR STEEL BEAMS WHERE APPLICABLE)								
NO	FLR	PLY/ID	NOTES	CALC LVL - MIN BRG	W.C. BEAM	E.O. BEAM	CALC #
B01	2	1	(6-D2) 1.75X14 X 11 7/8 - ABOVE TOP PL		0'-0"	0'-0 7/8"	1
B02	2	1	(6-D2) 1.75X16 X 13 7/8 (P12-D06) AHRS-50		26'-4"	27'-4"	2
B03	2	1	(6-D03) 5 1/4 X 15		17'-9"	24'-3 1/2"	3
B04	2	1	(6-D04) 5 1/4 X 15		17'-9"	27'-11 5/8"	4
B05	2	1	(6-D05) 5 1/4 X 15		19'-9"	29'-3 1/2"	5
B06	2	1	(6-D06) 5 1/4 X 21		32'-4"	39'-3 1/2"	6
B07	2	1	(6-D07) 5 1/4 X 21		32'-4"	39'-3 1/2"	7
B08	2	1	(6-D07) 5 1/4 X 21		32'-1 3/8"	39'-3 1/2"	8
B09	2	1	(6-D07) 5 1/4 X 18		32'-1 3/8"	39'-3 1/2"	9
B10	2	1	(6-D08) 5 1/4 X 18		21'-1 1/2"	28'-3 1/2"	10
B11	1	1	(6-11)		11'-3 1/8"	12'-1 1/8"	11
B12	2	1	(6-12) 5 1/4 X 24		4'-4"	11'-1 1/8"	12
B13	2	1	(6-13) 5 1/4 X 30		24'-6 1/4"	24'-6"	13
B14	2	1	(6-14) 5 1/4 X 30		21'-10 3/4"	21'-10"	14
B15	2	1	(6-15) 5 1/4 X 30		39'-4"	39'-4"	15
B16	2	1	(6-16) 5 1/4 X 30 1/2		38'-5 1/2"	38'-4 1/2"	16
B17	2	1	(6-17) 5 1/4 X 24		29'-3 1/4"	29'-11 1/2"	17
B18	2	1	(6-18) 5 1/4 X 21		29'-3 1/4"	29'-11 1/8"	18
B19	1	1	(6-19)		12'-5 1/8"	13'-3 1/8"	19
B20	1	1	(6-20)			0'-7 1/8"	20
B21	1	1	(6-21)		1'-9"	2'-6 1/8"	21
B22	2	1	(6-22) 5 1/4 X 18		4'-4"	10'-1 1/8"	22
B23	2	1	(6-23) 5 1/4 X 18		4'-3 3/8"	28'-4 5/8"	23
B24	2	1	(6-24) 5 1/4 X 18		9'-3"	28'-4 1/8"	24
B25	2	1	(6-25) 5 1/4 X 18		17'-1 1/4"	31'-9 1/8"	25
B26	1	1	(6-26) 5 1/4 X 24		21'-9 1/8"	22'-1 1/8"	26
B27	2	1	(6-27) 5 1/4 X 18 (10.3/18 (H10 X 60 AHRS)-50		19'-1 1/8"	10'-1 1/8"	27
B28	1	3	(6-28) 5 1/4 X 11 7/8		26'-2"	27'-2"	28
B29	1	3	(6-29) 5 1/4 X 11 7/8		17'-5"	10'-1 1/8"	29
B30	1	1	(6-30) 5 1/4 X 14		16'-11 5/8"	17'-11 1/8"	30
B31	1	1	(6-31)			2'-1 1/8"	31
B32	1	1	(6-32)			0'-6 1/8"	32
B33	2	1	(6-33) 5 3/4 X 18		12'-10 3/4"	11'-1 1/8"	33
B34	1	1	(6-34) 5 1/4 X 18		22'-2 7/8"	11'-1 1/8"	34
B35	1	1	(6-35)				35
B36	1	1	(6-36)				36
B37	1	1	(6-37)				37
B38	1	3	(6-38) 5 1/4 X 11 7/8		6'-3 3/4"	10'-1 1/8"	38
B39	1	3	(6-39) 5 1/4 X 11 7/8		4'-1 1/2"	10'-1 1/8"	39
B40	2	1	(6-40) 5 1/4 X 18		22'-3 3/4"	22'-3 1/8"	40
B41	1	1	(6-41) 5 1/4 X 11 7/8		12'-10 1/8"	14'-1 1/8"	41
B42	1	1	(6-42) 5 1/4 X 16 1/2		17'-4 3/4"	10'-1 1/8"	42
B43	1	1	(6-43) 5 1/4 X 18		18'	12'-5 5/8"	43
B44	1	1	(6-44)		19'-3 1/4"	20'-3 1/8"	44
B45	1	1	(6-45) 5 1/2 X 15		19'-3 1/2"	11'-6 1/8"	45
B46	1	1	(6-46)			10'-3 1/8"	46
B47	1	1	(6-47) 5 1/2 X 15		10'-11"	11'-6 1/8"	47
B48	1	1	(6-48) 5 1/2 X 15		10'-3 1/2"	11'-6 1/8"	48
B49	1	1	(6-49) 5 1/2 X 15		6'-1 3/8"	11'-5 3/8"	49
B50	1	1	(6-50)				50
B51	1	1	(6-51) 5 1/2 X 15		9'-4 7/8"	11'-9"	51
B52	1	1	(6-52) 5 1/4 X 15		19'	11'-1 1/8"	52
B53	1	1	(6-53)				53
B54	1	1	(6-54)				54
B55	1	1	(6-55)				55
B56	1	1	(6-56)				56
B57	1	1	(6-57)				57
B58	1	3	(6-58) 1 5/4 X 14		7'-4 7/8"	11'-3 1/8"	58
B59	2	1	(6-59) 5 3/4 X 13 1/2		12'-11 1/4"	22'-3 1/8"	59
B60	2	2	(6-60) 1 5/4 X 16		16'-4 1/8"	25'-4 3/4"	60
B61	2	1	(6-61) 5 3/4 X 16		14'-1 1/4"	23'-4 3/4"	61

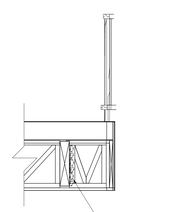

CANT'D JOIST @ BALCONY DETAIL
3/4 IN = 1 FT

GENERAL FRAMING NOTES:
(2) STUDS UNDER EA. GIRDER/BEAM MIN. TYP. UNO. STUDS/BRGS CALLED OUT TO BE CONTINUOUS TO FOUNDATIO

SHEET INDEX	
PAGE	TITLE
A1	COVER SHEET
A2	SITE PLAN
A3	LANDSCAPE PLAN - OVERVIEW
A4	LANDSCAPE PLAN - ENLARGED
A5	IRRIGATION PLAN
A6	FLOOR PLAN - 1ST LEVEL
A7	FLOOR PLAN - BASEMENT
A8	FOUNDATION
A9	DETAIL VIEWS
A10	FABRICATED COLUMN CAPS
A11	STEEL BEAM DETAILS
A12	STEEL BEAM DETAILS
A13	STEEL BEAM DETAILS
A14	WALL BRACING - 1ST LEVEL
A15	WALL BRACING - BASEMENT
A16	FLOOR LAYOUT - 1ST LEVEL
A17	ROOF LAYOUT - BASEMENT
A18	ROOF LAYOUT - 1ST LEVEL
A19	ROOF LAYOUT - OVERVIEW
A20	ELEVATIONS
A21	ELEVATIONS
A22	SECTION VIEWS
A23	SECTION VIEWS
A24	SECTION VIEWS
A25	SECTION VIEWS
A26	SECTION VIEWS
A27	SECTION VIEWS
E1	ELECTRICAL - 1ST LEVEL
E2	ELECTRICAL - BASEMENT

PRELIMINARY
NOT FOR CONSTRUCTION

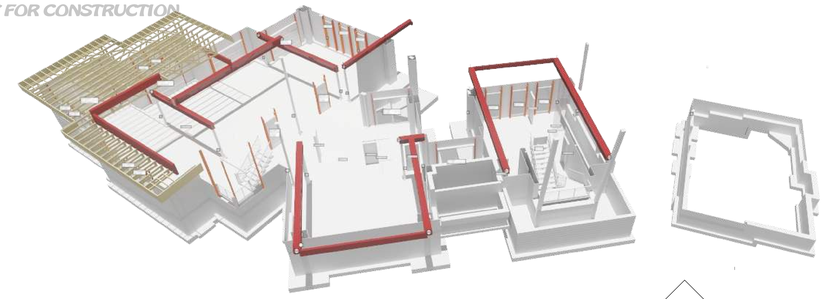

ROOF FRAMING- BASEMENT - FRONT

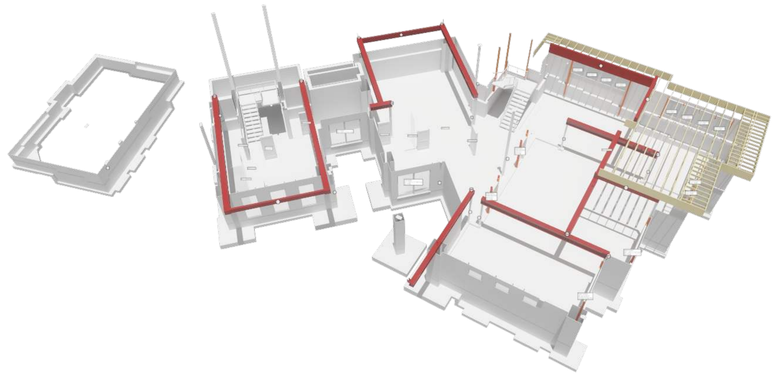

ROOF FRAMING- BASEMENT - REAR

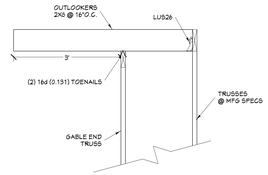

OUTLOOKER DETAIL
3/4 IN = 1 FT

SCAN FOR CURRENT PLAN

SCAN FOR ENGINEERED CALCS

SCAN FOR 3D FRAMING MODEL

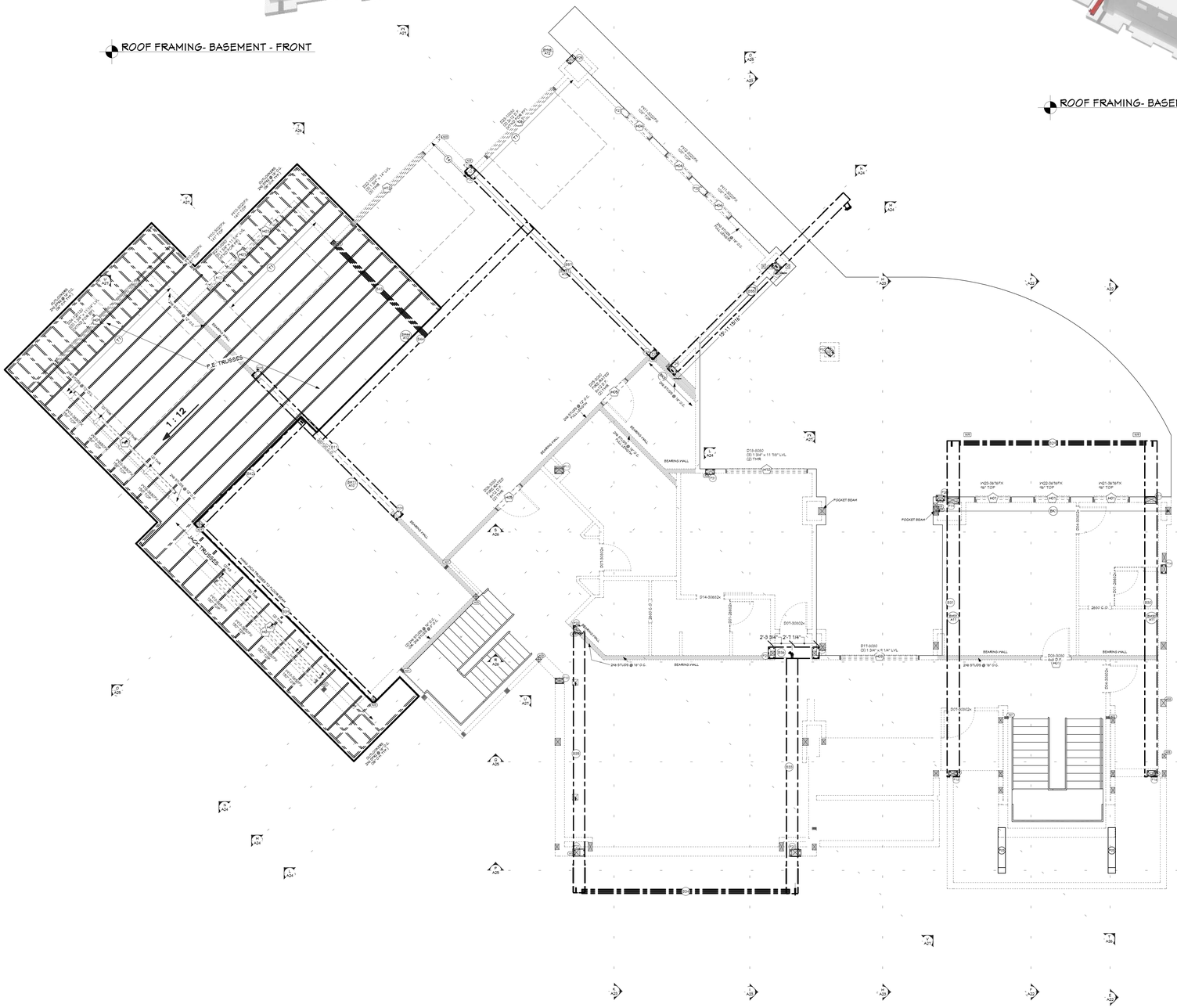
P.E. TRUSSES
1 : 12
JACK TRUSSES
BEARING WALL
24" STUDS @ 16" O.C.
D15-5050
(3) 1 3/4" x 11 7/8" LVL
(2) THHK
POCKET BEAM
D01-30602x
D01-28602x
2'-3 3/4"
2'-1 1/4"
D11-5050
(3) 1 3/4" x 11 7/8" LVL
D03-5050
4x6 2" P.T.
HH23-5676FX
HH21-5676FX
HH1
BM1
D04-30602x
D01-28602x
D01-30602x
D03-5050
4x6 2" P.T.
D04-30602x
D01-30602x
2800 C.O.
2800 C.O.
BEARING WALL
24" STUDS @ 16" O.C.
BEARING WALL
D01-30602x
D01-28602x
D11-5050
(3) 1 3/4" x 11 7/8" LVL
D03-5050
4x6 2" P.T.
BEARING WALL
24" STUDS @ 16" O.C.
BEARING WALL
D01-30602x
D01-28602x
D01-30602x
D03-5050
4x6 2" P.T.
D04-30602x
D01-30602x
2800 C.O.
2800 C.O.
BEARING WALL
BEARING WALL
D01-30602x
D01-28602x
D11-5050
(3) 1 3/4" x 11 7/8" LVL
D03-5050
4x6 2" P.T.
BEARING WALL
24" STUDS @ 16" O.C.

PRELIMINARY
NOT FOR CONSTRUCTION

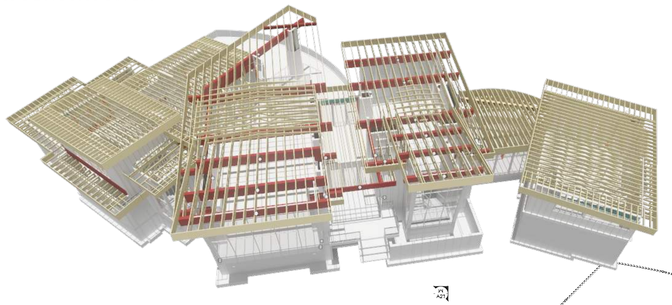

ROOF FRAMING- 1ST LEVEL - FRONT

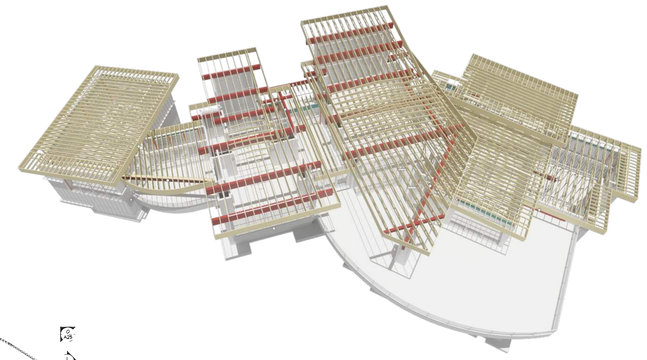

ROOF FRAMING- 1ST LEVEL - REAR

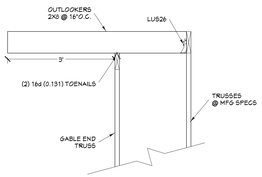

OUTLOOKER DETAIL
3/4 IN = 1 FT

SCAN FOR CURRENT PLAN

SCAN FOR ENGINEERED CALCS

SCAN FOR 3D FRAMING MODEL

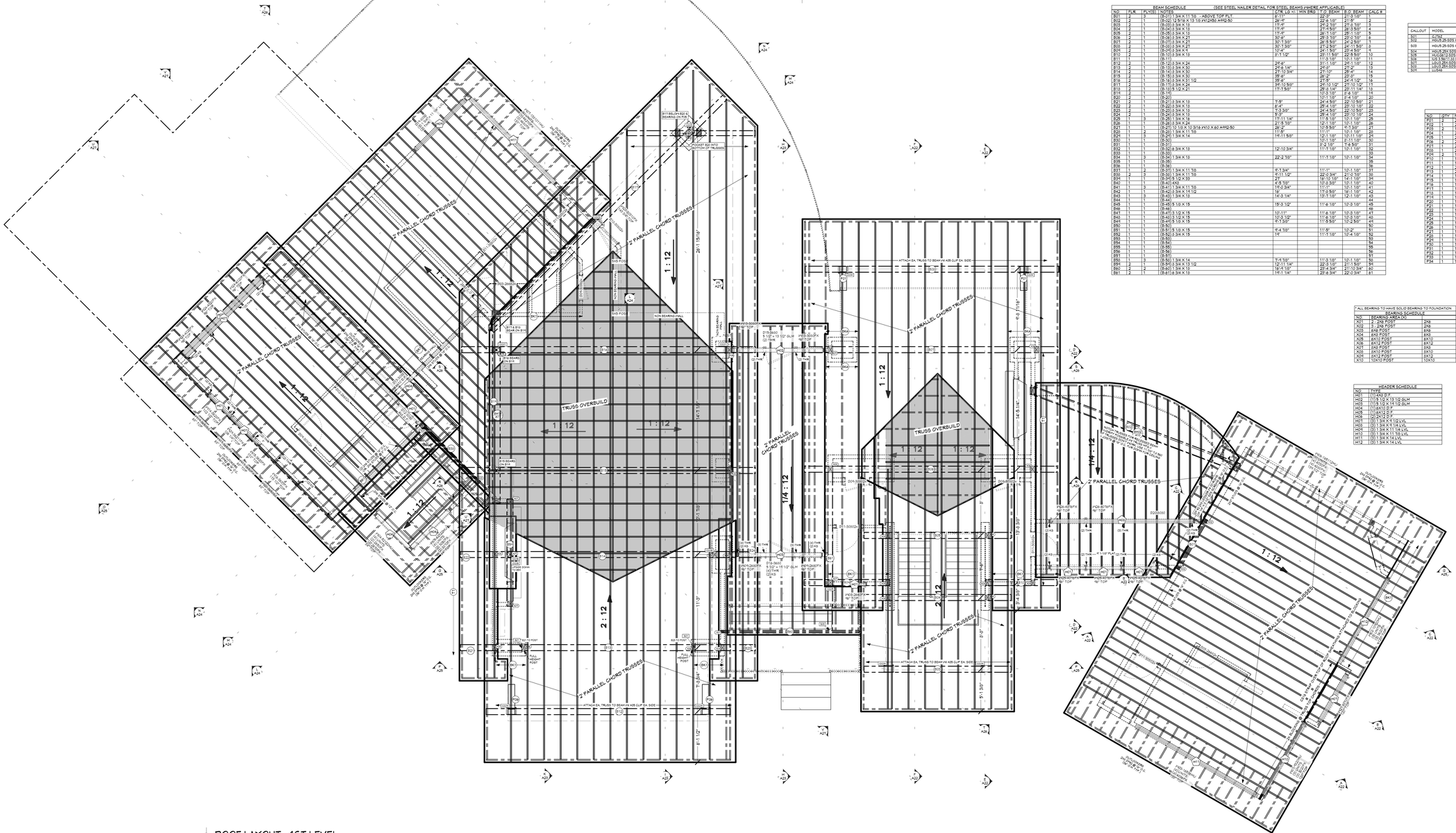

ROOF LAYOUT - 1ST LEVEL
1/4 IN = 1 FT

BEAM SCHEDULE (SEE STEEL NAILER DETAIL FOR STEEL BEAMS WHERE APPLICABLE)								
NO.	PLY	PLIES	NOTES	AVE. LG +/-	MIN BRG	T.O. BEAM	B.O. BEAM	CALC #
B01	2	1	(2) 1.25-2.0 3/4 X 11 7/8 - ABOVE TOP PLT	8'-0"		10'-1 1/8"	9'-1 3/8"	1
B02	2	1	(2) 1.25-2.0 3/4 X 11 7/8 PNT(2450 AHQ-50	16'-3 1/4"		10'-1 1/8"	9'-1 3/8"	2
B03	2	1	(2) 1.25-2.0 3/4 X 11 7/8	11'-4"		10'-1 1/8"	9'-1 3/8"	3
B04	2	1	(2) 1.25-2.0 3/4 X 11 7/8	11'-4"		27'-9 9/32"	26'-9 9/32"	4
B05	2	1	(2) 1.25-2.0 3/4 X 13	13'-4"		26'-1 1/8"	25'-1 1/8"	5
B06	2	1	(2) 1.25-2.0 3/4 X 14	30'-6"		29'-3 1/8"	28'-3 1/8"	6
B07	2	1	(2) 1.25-2.0 3/4 X 29	30'-1 3/8"		28'-9 5/8"	27'-9 5/8"	7
B08	2	1	(2) 1.25-2.0 3/4 X 29	30'-1 3/8"		28'-9 5/8"	27'-9 5/8"	8
B09	2	1	(2) 1.25-2.0 3/4 X 14	30'-7 3/8"		29'-4 1/8"	28'-4 1/8"	9
B10	2	1	(2) 1.25-2.0 3/4 X 14	10'-4"		29'-1 1/8"	28'-1 1/8"	10
B11	2	1	(2) 1.25-2.0 3/4 X 14	5'-1 1/2"		11'-3 1/8"	10'-1 1/8"	11
B12	2	1	(3) 1.25-2.0 3/4 X 24	40'-6"		31'-1 1/8"	29'-1 1/8"	12
B13	2	1	(3) 1.25-2.0 3/4 X 30	40'-6 1/4"		40'-0"	41'-4"	13
B14	2	1	(3) 1.25-2.0 3/4 X 30	21'-10 3/4"		41'-10"	39'-4"	14
B15	2	1	(3) 1.25-2.0 3/4 X 30	39'-6"		40'-2"	42'-0"	15
B16	2	1	(3) 1.25-2.0 3/4 X 11 1/2	39'-6"		24'-9"	24'-1 1/2"	16
B17	2	1	(3) 1.25-2.0 3/4 X 24	39'-10 5/8"		24'-10 1/2"	24'-1 1/2"	17
B18	2	1	(3) 1.25-2.0 3/4 X 24	11'-1 5/8"		24'-10 1/2"	23'-11 1/2"	18
B19	2	1	(3) 1.25-2.0 1/2 X 21			40'-3 1/8"	39'-3 1/8"	19
B20	2	1	(3) 1.25-2.0			10'-1 1/8"	9'-4 1/8"	20
B21	2	1	(3) 1.25-2.0 3/4 X 18	9'-9"		24'-4 5/8"	22'-10 5/8"	21
B22	2	1	(3) 1.25-2.0 3/4 X 18	8'-4"		26'-4 1/2"	25'-10 1/8"	22
B23	2	1	(3) 1.25-2.0 3/4 X 18	9'-3 3/8"		24'-4 5/8"	22'-10 5/8"	23
B24	2	1	(3) 1.25-2.0 3/4 X 18	8'-3"		24'-4 1/8"	22'-10 1/8"	24
B25	3	1	(3) 1.25-2.0 3/4 X 24	11'-1 1/4"		11'-3 1/8"	10'-1 1/8"	25
B26	3	1	(3) 1.25-2.0 3/4 X 24	11'-1 1/4"		11'-3 1/8"	10'-1 1/8"	26
B27	1	1	(1) 5.25-1.0 1 3/16 P410 X 60 AHQ-50	11'-0"		12'-1 1/8"	10'-11 1/8"	27
B28	1	2	(1) 5.25-1.0 1 3/16	11'-0"		11'-1"	10'-1 1/8"	28
B29	1	1	(1) 5.25-1.0 3/4 X 14	16'-11 5/8"		12'-1 1/8"	10'-11 1/8"	29
B30	1	1	(1) 5.25-1.0			10'-1 1/8"	9'-11 1/8"	30
B31	1	1	(1) 5.25-1.0			9'-2 1/8"	7'-4 3/8"	31
B32	1	1	(1) 5.25-1.0 3/4 X 18	12'-10 3/4"		11'-1 1/8"	10'-1 1/8"	32
B33	1	1	(1) 5.25-1.0					33
B34	1	3	(1) 5.25-1.0 3/4 X 18	22'-2 7/8"		11'-1 1/8"	10'-1 1/8"	34
B35	1	1	(1) 5.25-1.0					35
B36	1	1	(1) 5.25-1.0					36
B37	1	2	(1) 5.25-1.0 3/4 X 11 7/8	8'-3 3/4"		11'-1"	10'-1 1/8"	37
B38	1	2	(1) 5.25-1.0 3/4 X 11 7/8	8'-11 1/2"		26'-0 3/4"	24'-0 7/8"	38
B39	1	1	(1) 5.25-1.0 1/2 X 39	2'-1"		18'-10 1/8"	14'-1 1/8"	39
B40	1	1	(1) 5.25-1.0 HSS	4'-9 7/8"		12'-3 3/8"	10'-1 1/8"	40
B41	1	3	(1) 5.42-1.0 3/4 X 11 7/8	11'-0 3/4"		11'-1"	10'-1 1/8"	41
B42	1	1	(1) 5.42-1.0 3/4 X 11 7/8	8'		11'-1 1/8"	10'-1 1/8"	42
B43	1	1	(1) 5.42-1.0 3/4 X 18	14'-3 1/4"		12'-1 1/8"	10'-1 1/8"	43
B44	1	1	(1) 5.42-1.0 5.1/2 X 15			12'-3 1/8"	10'-1 1/8"	44
B45	1	1	(1) 5.42-1.0 5.1/2 X 15	19'-3 1/2"		11'-6 1/8"	10'-3 1/8"	45
B46	1	1	(1) 5.42-1.0					46
B47	1	1	(1) 5.42-1.0 1/2 X 15	10'-11"		11'-6 1/8"	10'-3 1/8"	47
B48	1	1	(1) 5.42-1.0 1/2 X 15	10'-3 1/2"		11'-6 1/8"	10'-3 1/8"	48
B49	1	1	(1) 5.42-1.0 5.1/2 X 15	8'-1 5/8"		11'-5 5/8"	10'-2 5/8"	49
B50	1	1	(1) 5.42-1.0					50
B51	1	1	(1) 5.5-1.0 5.1/2 X 15	9'-4 7/8"		11'-5"	10'-2"	51
B52	1	1	(1) 5.5-1.0 3/4 X 15	1'-6"		11'-1 1/8"	10'-4 1/8"	52
B53	1	1	(1) 5.5-1.0					53
B54	1	1	(1) 5.5-1.0					54
B55	1	1	(1) 5.5-1.0					55
B56	1	1	(1) 5.5-1.0					56
B57	1	1	(1) 5.5-1.0					57
B58	3	3	(1) 5.50-1.0 3/4 X 14	11'-4 7/8"		11'-3 1/8"	10'-1 1/8"	58
B59	3	1	(1) 5.50-1.0 3/4 X 13 1/2	12'-11 1/8"		32'-3 1/8"	31'-1 5/8"	59
B60	2	2	(1) 8.60-1.0 3/4 X 15	16'-4 1/8"		29'-4 3/4"	31'-10 3/4"	60
B61	2	1	(1) 8.61-1.0 3/4 X 15	19'-1 1/4"		30'-8 3/4"	29'-0 3/4"	61

HANGER SCHEDULE				
CALLOUT	MODEL	TOP NAILS	MEMBER NAILS	FACE NAILS
SD1	SUR/L26	N/A	2.00"	
SD2	HGUS 26-SDS HH16	N/A	2.00"	(26) 1/4" X 2 1/2" SDS
SD3	HGUS 26-SDS HH16	N/A	2.00"	(26) 1/4" X 2 1/2" SDS SCREWS
SD4	HGUS 26-SDS HH16 (4 SKEW)	N/A	2.00"	(26) 1/4" X 2 1/2" SDS
SD5	HGUS 26-SDS HH16	N/A	2.00"	(26) 1/4" X 2 1/2" SDS
SD6	LUS26 (4) 10D TOENAILS	N/A	2.00"	(4) 0.162 X 3"
SD7	HD10 (30)-SDS HH = 16	N/A	2.00"	(30) 1/4" X 2 1/2" SDS
SD8	HD10 (30)-SDS HH = 16	N/A	2.00"	(30) 1/4" X 2 1/2" SDS
SD9	HD10 (26)-SDS HH = 16 (4 SKEW)	N/A	2.00"	(26) 1/4" X 2 1/2" SDS
SD10	LUS48	N/A	2.00"	(4) 0.162 X 3"

POST SCHEDULE			
NO.	QTY.	PLY	NOTES
P01	2	2	2X6 D.F. #2
P02	2	2	2X10
P03	2	1	6X10 D.F. #2
P04	2	1	6X12 DF #2
P05	1	2	10X10
P06	2	2	10X10 D.F. #2
P07	1	2	POST - BM 2-1
P08	1	2	POST - BM 4-2
P09	2	2	POST - BM 11-2
P10	1	1	POST - BM 14-1
P11	1	1	POST - BM 14-2
P12	1	2	POST - BM 15-1
P13	1	2	POST - BM 20-1
P14	2	2	POST - BM 20-2
P15	1	1	POST - BM 21-1
P16	2	2	POST - BM 30-1
P17	1	1	POST - BM 30-2
P18	1	1	POST - BM 31-1
P19

PRELIMINARY
NOT FOR CONSTRUCTION

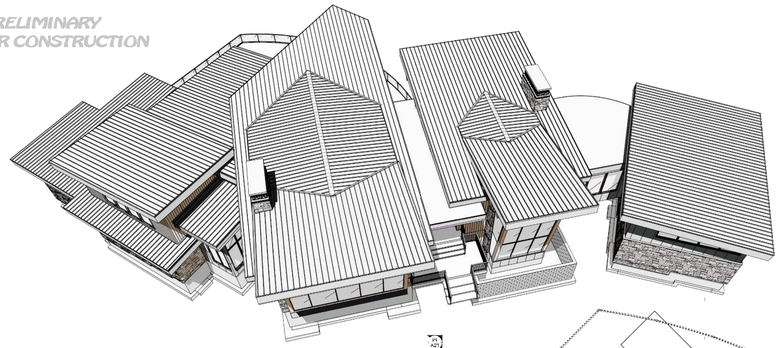

ROOF OVERVIEW - FRONT

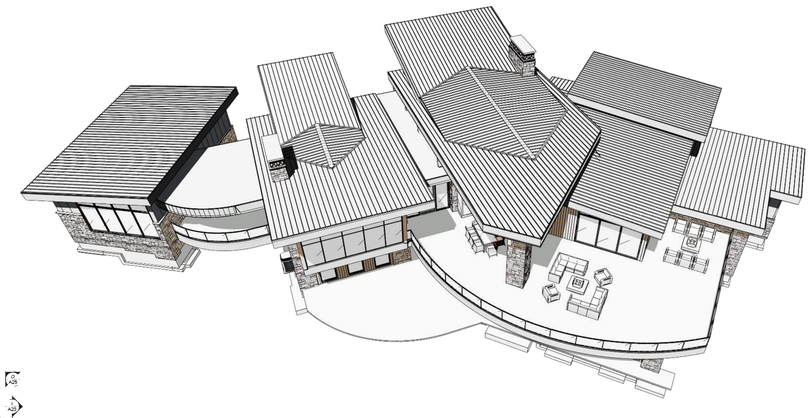

ROOF OVERVIEW - REAR

OUTLOOKER DETAIL
3/4 IN = 1 FT

SCAN FOR CURRENT PLAN

SCAN FOR ENGINEERED CALCS

SCAN FOR 3D FRAMING MODEL

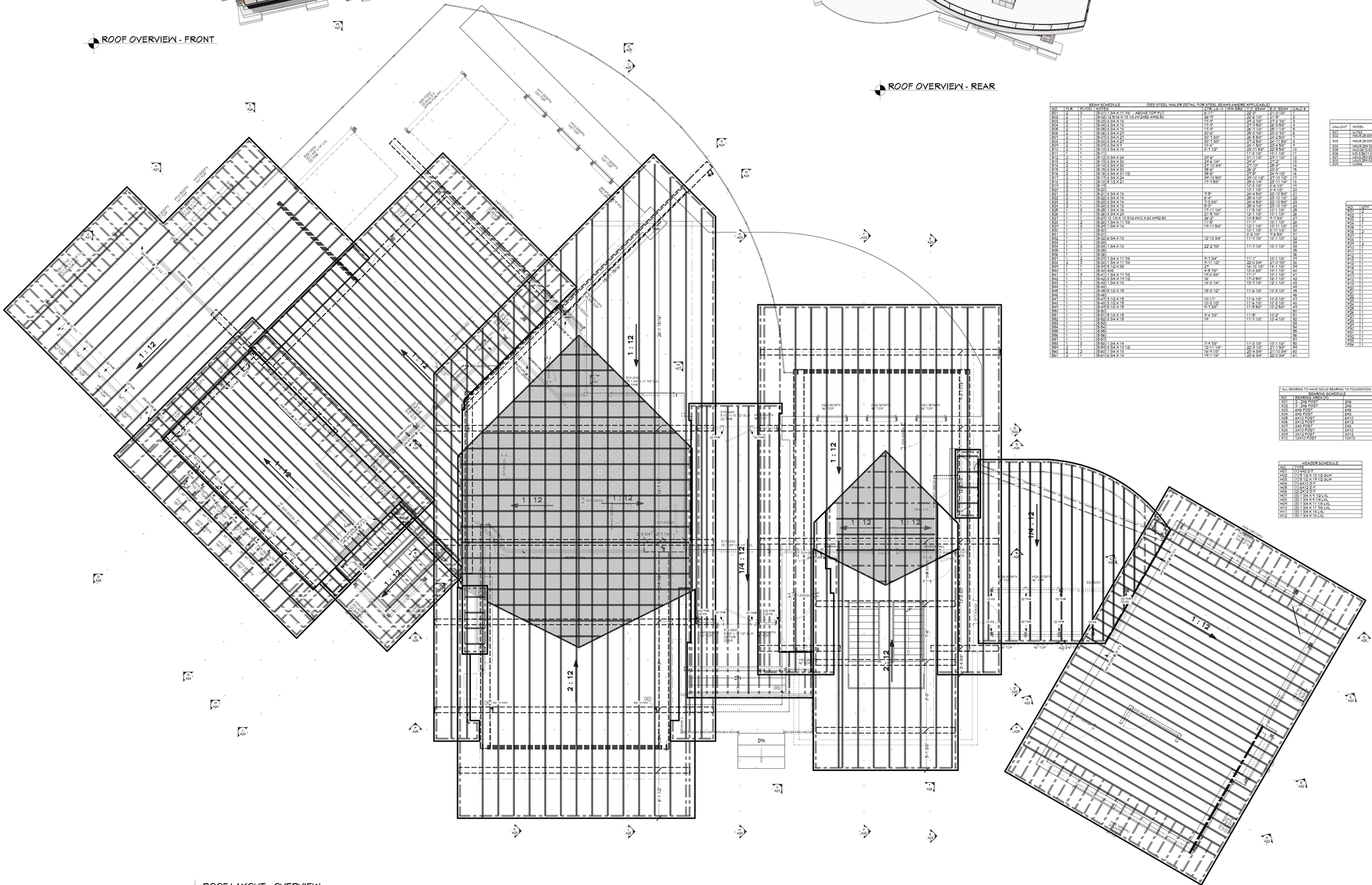

ROOF LAYOUT - OVERVIEW
1/4 IN = 1 FT

BEAM SCHEDULE (SEE STEEL NAILER DETAIL FOR STEEL BEAMS WHERE APPLICABLE)

NO.	PLY	PLIES	NOTES	PCS LG +/- MIN BRG	TOP BEAM	BTM BEAM	CALC #
B01	2	1	(2)9.25 LSL 3.54 X 11 7/8 - ABOVE TOP PLT	8'-0"	24'-3 1/8"	24'-3 1/8"	1
B02	2	1	(2)9.25 LSL 3.54 X 11 7/8 (4) PAT2450 AMQ-50	8'-0"	24'-3 1/8"	24'-3 1/8"	2
B04	2	1	(3)9.25 LSL 3.54 X 11 7/8	11'-4"	24'-3 1/8"	41'-3 1/8"	3
B05	2	1	(3)9.25 LSL 3.54 X 14	11'-4"	41'-3 1/8"	41'-3 1/8"	4
B06	2	1	(3)9.25 LSL 3.54 X 14	11'-4"	24'-3 1/8"	29'-3 1/8"	5
B07	2	1	(3)9.25 LSL 3.54 X 14	30'-4"	29'-3 1/8"	41'-3 1/8"	6
B09	2	1	(3)9.25 LSL 3.54 X 29	30'-1 5/8"	28'-9 5/8"	41'-3 1/8"	7
B10	2	1	(3)9.25 LSL 3.54 X 29	30'-1 5/8"	41'-3 1/8"	28'-9 5/8"	8
B11	2	1	(3)9.25 LSL 3.54 X 14	6'-1 1/4"	24'-1 1/8"	29'-3 1/8"	9
B12	2	1	(3)9.25 LSL 3.54 X 14	10'-4"	24'-1 1/8"	29'-3 1/8"	10
B13	2	1	(3)9.25 LSL 3.54 X 18	6'-1 1/4"	41'-3 1/8"	29'-3 1/8"	11
B14	2	1	(3)9.25 LSL 3.54 X 18		11'-3 1/8"	11'-3 1/8"	12
B15	2	1	(3)9.25 LSL 3.54 X 24		11'-3 1/8"	17'-1 1/8"	13
B16	2	1	(3)9.25 LSL 3.54 X 24	4'-6"	31'-1 1/8"	4'-1 1/8"	14
B17	2	1	(3)9.25 LSL 3.54 X 24	4'-6 1/4"	4'-1 1/8"	31'-1 1/8"	15
B18	2	1	(3)9.25 LSL 3.54 X 30	21'-10 3/4"	29'-1 1/8"	29'-1 1/8"	16
B19	2	1	(3)9.25 LSL 3.54 X 30	19'-6"	29'-1 1/8"	41'-3 1/8"	17
B20	2	1	(3)9.25 LSL 3.54 X 30	19'-6"	41'-3 1/8"	24'-3 1/8"	18
B16	2	1	(3)9.25 LSL 3.54 X 11 1/2	19'-6"	24'-3 1/8"	24'-1 1/8"	19
B17	2	1	(3)9.25 LSL 3.54 X 24	24'-10 3/4"	24'-1 1/8"	24'-1 1/8"	20
B18	2	1	(3)9.25 LSL 3.54 X 24	11'-1 5/8"	24'-3 1/8"	24'-1 1/8"	21
B19	2	1	(3)9.25 LSL 3.54 X 11 1/2		10'-1 1/8"	11'-4 1/8"	22
B20	2	1	(3)9.25 LSL 3.54 X 21	1'-3"	24'-4 5/8"	22'-10 5/8"	23
B21	2	1	(3)9.25 LSL 3.54 X 18	6'-4"	29'-4 1/8"	22'-10 5/8"	24
B22	2	1	(3)9.25 LSL 3.54 X 21	6'-4"	29'-4 1/8"	22'-10 5/8"	25
B23	2	1	(3)9.25 LSL 3.54 X 15	1'-3 5/8"	24'-4 5/8"	22'-10 5/8"	26
B24	2	1	(3)9.25 LSL 3.54 X 18	6'-3"	29'-4 1/8"	10'-1 1/8"	27
B26	1	3	(3)9.25 LSL 3.54 X 18	11'-1 1/4"	11'-3 1/8"	10'-1 1/8"	28
B27	1	3	(3)9.25 LSL 3.54 X 18	24'-3 1/8"	11'-3 1/8"	10'-1 1/8"	29
B28	1	1	(3)9.25 LSL 3.54 X 18	6'-3"	12'-3 5/8"	10'-1 1/8"	30
B29	1	1	(3)9.25 LSL 10.5 X 12 9/16 PAT2 X 60 AMQ-50	24'-3"	12'-3 5/8"	41'-3 5/8"	31
B30	1	2	(3)9.25 LSL 3.54 X 11 7/8	11'-1"	10'-1 1/8"	10'-1 1/8"	32
B31	1	2	(3)9.25 LSL 3.54 X 14	19'-11 5/8"	12'-1 1/8"	10'-11 1/8"	33
B50	1	1	(3.5G)		10'-1 1/8"	6'-11 1/8"	50
B51	1	1	(3.5G)		6'-2 1/8"	11'-4 5/8"	51
B52	1	1	(3.5G) 8.34 X 18	12'-10 3/4"	11'-1 1/8"	10'-1 1/8"	52
B53	1	1	(3.5G)				53
B54	1	3	(3.5G) 7.34 X 18	22'-2 5/8"	11'-1 1/8"	10'-1 1/8"	54
B55	1	1	(3.5G)				55
B56	1	1	(3.5G)				56
B57	2	2	(6.5G) 7.34 X 11 7/8	8'-3 3/4"	11'-1"	10'-1 1/8"	57
B58	2	2	(6.5G) 7.34 X 11 7/8	8'-11 1/2"	40'-2 3/4"	41'-3 1/8"	58
B59	1	1	(3.5H) 5 1/2 X 39	2'-1"	18'-10 1/8"	14'-1 1/8"	59
B60	1	1	(3.5H) 14	4'-9 7/8"	12'-3 5/8"	10'-1 1/8"	60
B61	1	3	(6.4) 7.34 X 11 7/8	11'-0 3/4"	11'-1"	10'-1 1/8"	61
B62	1	1	(6.4) 7.34 X 14	6'-0"	12'-1 1/8"	12'-3 1/8"	62
B63	1	1	(6.4) 7.34 X 18	14'-3 1/4"	11'-3 1/8"	12'-3 1/8"	63
B64	1	1	(6.4)				64
B65	1	1	(6.5G) 5 1/8 X 15	19'-3 1/2"	11'-6 1/8"	10'-3 1/8"	65
B66	1	1	(6.5G)				66
B67	1	1	(6.4) 7.34 X 11 7/8	10'-11"	11'-6 1/8"	10'-3 1/8"	67
B68	1	1	(6.4) 3.12 X 15	10'-3 1/2"	11'-6 1/8"	10'-3 1/8"	68
B69	1	1	(6.4) 3.12 X 15	4'-1 5/8"	11'-6 1/8"	10'-3 1/8"	69
B70	1	1	(6.5G) 5 1/8 X 15	9'-4 7/8"	11'-5 7/8"	10'-2"	70
B71	1	1	(6.4) 7.34 X 15	1/4"	11'-1 7/8"	12'-4 1/8"	71
B72	1	1	(6.5G)				72
B73	1	1	(6.5G)				73
B74	1	1	(6.5G)				74
B75	1	1	(6.5G)				75
B76	1	1	(6.5G) 5 1/8 X 15	1'-4 5/8"	11'-3 7/8"	10'-1 1/8"	76
B77	3	3	(6.5G) 7.34 X 11 7/8	12'-11 1/8"	22'-5 7/8"	21'-1 5/8"	77
B60	2	2	(6.4G) 7.34 X 15	16'-4 1/8"	22'-4 3/4"	21'-10 3/4"	60
B61	2	1	(6.4) 8.34 X 15	19'-1 1/4"	22'-8 3/4"	22'-2 3/4"	61

HANGER SCHEDULE

CALLOUT	MODEL	TOP NAILS	MEMBER NAILS	FACE NAILS
S01	HUS26	N/A	2.00"	(26) 16D X 2.1/2" SDS
S02	HUS1.81/10 HANGERS	N/A	2.00"	(10) 16D X 2.1/2" SDS
S03	HUS 26-SDS H=16	N/A	2.00"	(20) 16D X 2.1/2" SDS SCREWS
S04	HUS 26-SDS H=15 SKEW	N/A	2.00"	(26) 16D X 2.1/2" SDS
S05	HUS 26-SDS H=15	N/A	2.00"	(18) 16D X 2.1/2" SDS
S06	HUS1.81/10 HANGERS	N/A	2.00"	(8) 16D X 2.1/2" SDS
S07	HUS 26-SDS H=15	N/A	2.00"	(18) 16D X 2.1/2" SDS
S08	HUS 26-SDS H=15 SKEW	N/A	2.00"	(18) 16D X 2.1/2" SDS
S09	LUS48	N/A	2.00"	(43) 16D X 3"

POST SCHEDULE

NO.	QTY	PLY	NOTES
P01	2	2	6X6 D.F. #2
P02	1	2	6X10
P03	2	1	6X10 D.F. #2
P04	1	2	6X10 D.F. #2
P05	1	2	6X12
P06	2	2	10X10 D.F. #2
P07	1	2	PGS(F) BM 21
P08	1	2	PGS(F) BM 9-2
P09	2	2	PGS(F) BM 11-2
P10	1	1	PGS(F) BM 16-1
P11	1	1	PGS(F) BM 15-2
P12	1	2	PGS(F) BM 20-2
P13	1	2	PGS(F) BM 20-1
P14	1	2	PGS(F) BM 21-2
P15	1	1	PGS(F) BM 21-1
P16	1	1	PGS(F) BM 30-1
P17	1	1	PGS(F) BM 30-2
P18	1	1	PGS(F) BM 31-1
P19	1	1	PGS(F) BM 31-2
P20	1	1	PGS(F) BM 36-1
P21	1	1	PGS(F) BM 36-2
P22	1	1	PGS(F) BM 39-1
P23	1	1	PGS(F) BM 39-2
P24	1	1	PGS(F) BM 39-3
P25	1	1	PGS(F) BM 39-4
P26	1	2	PGS(F) BM 50-2
P27	1	2	PGS(F) BM 50-1
P28	1	1	PGS(F) BM 51-1
P29	1	1	PGS(F) BM 51-2
P30	1	1	PGS(F) BM 56-1
P31	1	1	PGS(F) BM 56-2
P32	1	1	PGS(F) BM 58-1
P33	1	1	PGS(F) BM 58-2
P34	1	1	PGS(F) BM 59-1

ALL BEARING TO HAVE SOLID BEARING TO FOUNDATION

BEARING SCHEDULE

NO.	BEARING AREA (in)
X01	1 - 2X6 POST
X02	1 - 2X8 POST
X03	1 - 2X10 POST
X04	4X6 POST
X05	4X8 POST
X06	4X10 POST
X07	4X12 POST
X08	6X6 POST
X09	6X12 POST
X10	10X10 POST

HEADER SCHEDULE

NO.	TYPE
H01	(1) 4X12 SYP
H02	(1) 5 1/2 X 13 1/2 GLM
H03	(1) 5 1/2 X 14 1/2 GLM
H04	(1) 11 7/8 I 20 F
H05	(2) 11 7/8 I 20 F
H06	(3) 11 7/8 I 20 F
H07	(2) 3.54 X 11 7/8 LVL
H08	(3) 3.54 X 11 7/8 LVL
H09	(2) 3.54 X 14 LVL
H10	(3) 3.54 X 11 7/8 LVL
H11	(3) 3.54 X 14 LVL
H12	(2) 1.54 X 14 LVL

ROOF MATERIALS

RIDGE CAP	57 Ft
VALLEY FLASHING	283 Ft
90 DEG. FLASHING	243 Ft
BEND TO SLOPE FLASHING	42 Ft
RIDGE VENT	56 Ft
METAL ROOFING	8493 Sq. Ft.
MEMBRANE	3103 Sq. Ft.
OSB	296 Ea
GABLE FASCIA	568 Ft
EAVE FASCIA	549 Ft
DRIP EDGE	1434 Ft

ROOF FRAMING NOTES:
ALL EAVE OVERHANGS 36" UNO
ALL GABLE OVERHANGS 36" UNO

GENERAL FRAMING NOTES:
(2) STUDS UNDER EA. GIRDER/BEAM MIN. TYP. UNO. STUDS/BRGS CALLED OUT TO BE CONTINUOUS TO FOUNDATIO

SHEET INDEX

PAGE	TITLE
A1	COVER SHEET
A2	SITE PLAN
A3	LANDSCAPE PLAN - OVERVIEW
A4	LANDSCAPE PLAN - ENLARGED
A5	IRRIGATION PLAN
A6	FLOOR PLAN - 1ST LEVEL
A7	FLOOR PLAN - BASEMENT
A8	FOUNDATION
A9	DETAIL VIEWS
A10	FABRICATED COLUMN CAPS
A11	STEEL BEAM DETAILS
A12	STEEL BEAM DETAILS
A13	STEEL BEAM DETAILS
A14	WALL BRACING - 1ST LEVEL
A15	WALL BRACING - BASEMENT
A16	FLOOR LAYOUT - 1ST LEVEL
A17	ROOF LAYOUT - BASEMENT
A18	ROOF LAYOUT - 1ST LEVEL
A19	ROOF LAYOUT - OVERVIEW
A20	ELEVATIONS
A21	ELEVATIONS
A22	SECTION VIEWS
A23	SECTION VIEWS
A24	SECTION VIEWS
A25	SECTION VIEWS
A26	SECTION VIEWS
A27	SECTION VIEWS
E1	ELECTRICAL - 1ST LEVEL
E2	ELECTRICAL - BASEMENT

PRELIMINARY
NOT FOR CONSTRUCTION

ENGINEER STAMP AREA

PROJECT NO.
25-017

LEGACY RANCH LOT #13
ADAMS CO., ID

CONTRACTOR TO VERIFY ALL DETAILS, DIMENSIONS, AND SPECIFICATIONS PRIOR TO CONSTRUCTION, AND REPORT ANY DISCREPANCIES OR OMISSIONS TO THE DESIGNER. PURCHASER TO HOLD SVC DESIGN HARMLESS FROM ANY CLAIMS, LITIGATIONS OR SUITS THAT MAY ARISE DURING CONSTRUCTION OR ANYTIME THEREAFTER.

SHEET SIZE: ARCH E2 (36" x 54")
INITIAL DATE: 11/19/2025
PRINT DATE: 11/17/2026
DRAWN BY: Steve

ROOF LAYOUT - OVERVIEW

SVC Design
SVC Design
208.249.1288
Nampa, ID

SHEET NUMBER
A19
PAGE 19

PRELIMINARY
NOT FOR CONSTRUCTION

PRELIMINARY
NOT FOR CONSTRUCTION

SCAN FOR RENDERINGS

SCAN FOR CURRENT PLAN

SCAN FOR 3D FRAMING MODEL



FT FRONT ELEVATION
1/4 IN = 1 FT

EXTERIOR MATERIALS	
CALLOUT	DESCRIPTION
M01	NATURAL LEDGESTONE VENEER - TANS BROWNS CREAMS & BEIGE
M02	STANDING SEAM ROOFING - MIDNIGHT BRONZE
M03	VERTICAL CEDAR T&G SIDING - GLACIER HILLS CEDAR BRUSHED GOLDEN SAND
M04	WESTERN STATES METAL SIDING - T-GROOVE® NR MATTE BLACK

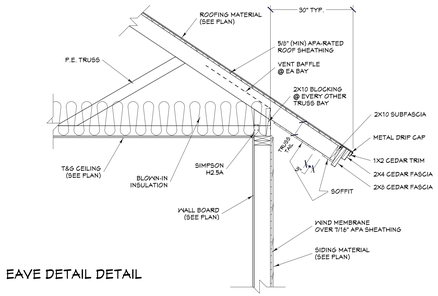

EAVE DETAIL DETAIL

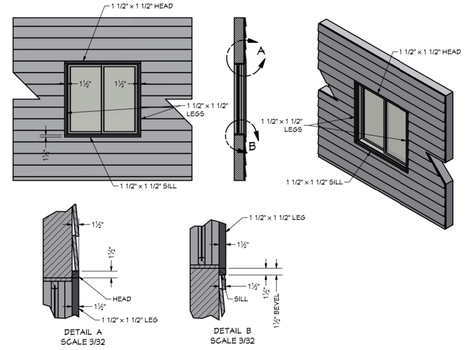

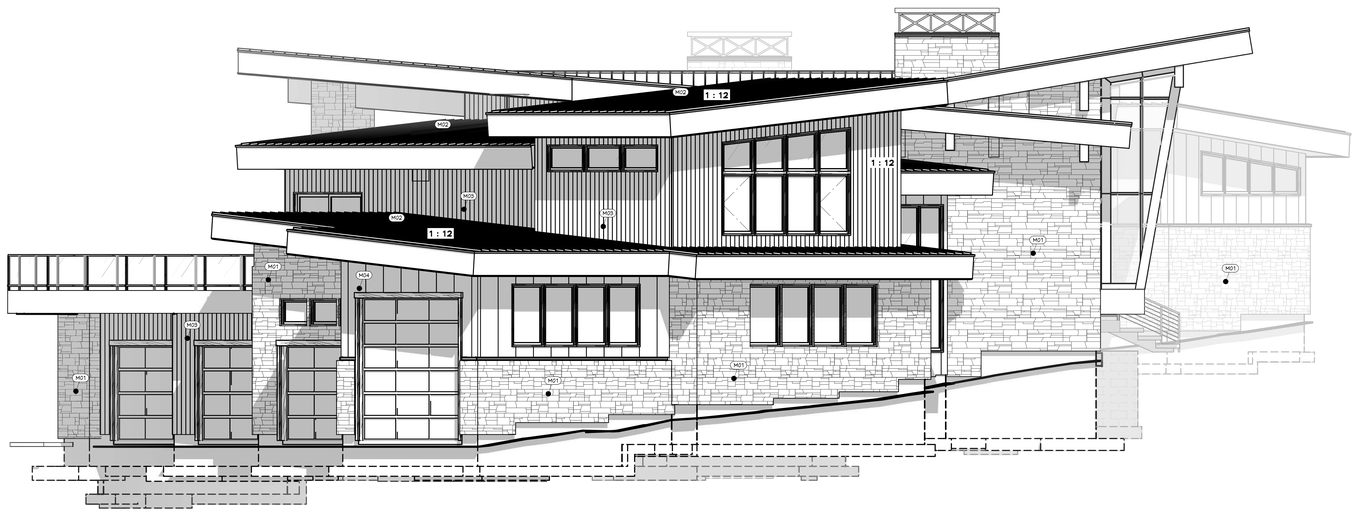

LT LEFT ELEVATION
1/4 IN = 1 FT

SHEET INDEX	
PAGE	TITLE
A1	COVER SHEET
A2	SITE PLAN
A3	LANDSCAPE PLAN - OVERVIEW
A4	LANDSCAPE PLAN - ENLARGED
A5	IRRIGATION PLAN
A6	FLOOR PLAN - 1ST LEVEL
A7	FLOOR PLAN - BASEMENT
A8	FOUNDATION
A9	DETAIL VIEWS
A10	FABRICATED COLUMN CAPS
A11	STEEL BEAM DETAILS
A12	STEEL BEAM DETAILS
A13	STEEL BEAM DETAILS
A14	WALL BRACING - 1ST LEVEL
A15	WALL BRACING - BASEMENT
A16	FLOOR LAYOUT - 1ST LEVEL
A17	ROOF LAYOUT - BASEMENT
A18	ROOF LAYOUT - 1ST LEVEL
A19	ROOF LAYOUT - OVERVIEW
A20	ELEVATIONS
A21	ELEVATIONS
A22	SECTION VIEWS
A23	SECTION VIEWS
A24	SECTION VIEWS
A25	SECTION VIEWS
A26	SECTION VIEWS
A27	SECTION VIEWS
E1	ELECTRICAL - 1ST LEVEL
E2	ELECTRICAL - BASEMENT

LICENSED ARCHITECT
AR-985249
06.19.2026
JESSICA PETTY
STATE OF IDAHO

PROJECT NO.
25-017

LEGACY RANCH LOT #13
ADAMS CO., ID

CONTRACTOR TO VERIFY ALL DETAILS, DIMENSIONS, AND SPECIFICATIONS PRIOR TO CONSTRUCTION, AND REPORT ANY DISCREPANCIES OR OMISSIONS TO THE DESIGNER. FAILURE TO DO SO SHALL RESULT IN THE CONTRACTOR ASSUMING FULL RESPONSIBILITY FOR ANY AND ALL COSTS, DELAYS, AND LIABILITIES ARISING FROM ANY CLAIMS, LITIGATIONS OR SUITS THAT MAY ARISE DURING CONSTRUCTION OR ANYTIME THEREAFTER.

SHEET SIZE
ARCH E2 (36" x 54")

INITIAL DATE: 11/19/2025
PRINT DATE: 11/17/2026

DRAWN BY:
Steve

ELEVATIONS

SMC Design
208.249.7288
Nampa, ID

SHEET NUMBER
A20
PAGE 20

NOT FOR CONSTRUCTION

PRELIMINARY
NOT FOR CONSTRUCTION



RE REAR ELEVATION
1/4 IN = 1 FT

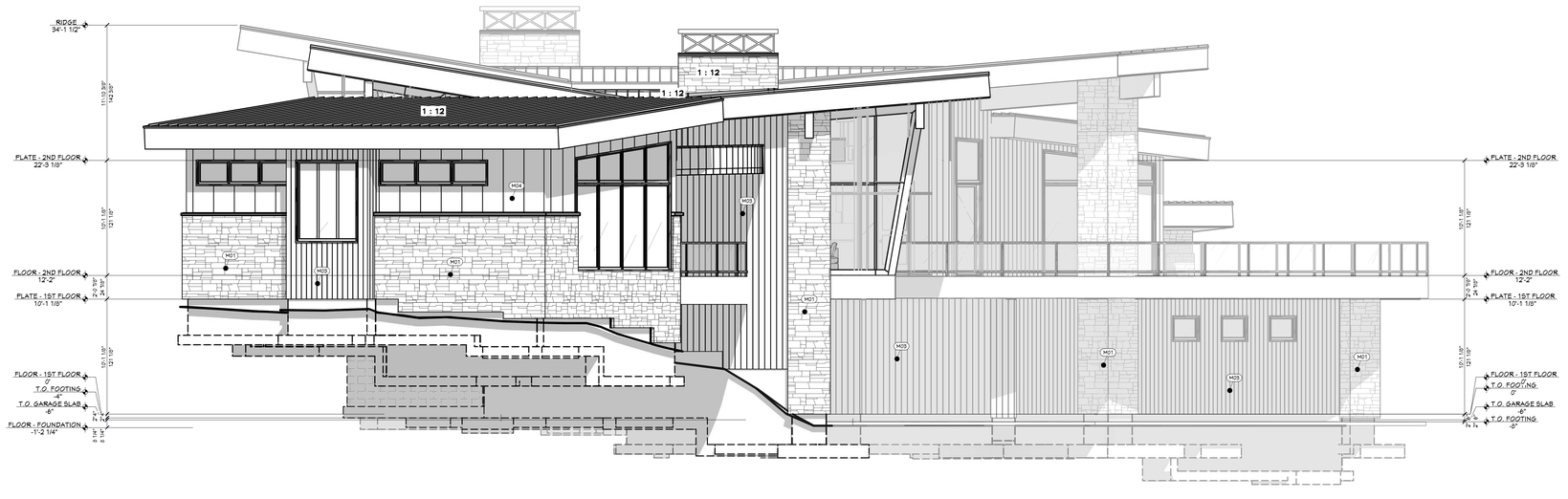

RT RIGHT ELEVATION
1/4 IN = 1 FT

SCAN FOR RENDERINGS

SCAN FOR CURRENT PLAN

SCAN FOR 3D FRAMING MODEL

LICENSED ARCHITECT
AR-985249
06.19.2026
JESSICA PETTY
STATE OF IDAHO

PROJECT NO.
25-017

CONTRACTOR TO VERIFY ALL DETAILS, DIMENSIONS, AND SPECIFICATIONS PRIOR TO CONSTRUCTION AND REPORT ANY DISCREPANCIES TO SMC DESIGN. SMC DESIGN IS NOT RESPONSIBLE FOR ANY CONSTRUCTION OR ANYTIME THEREAFTER. CONSTRUCTION AND ERRORS AND OMISSIONS NOT BROUGHT TO OUR ATTENTION PRIOR TO CONSTRUCTION OR ANYTIME THEREAFTER. CONSTRUCTION OR SUITS THAT MAY ARISE DURING CONSTRUCTION OR ANYTIME THEREAFTER. FROM ANY CLAIMS, LITIGATIONS OR SUITS THAT MAY ARISE DURING CONSTRUCTION OR ANYTIME THEREAFTER.

LEGACY RANCH LOT #13
ADAMS CO., ID

SHEET SIZE
ARCH E2 (36" x 54")

INITIAL DATE: 11/19/2025
PRINT DATE: 11/17/2026

DRAWN BY:
Steve

ELEVATIONS

SHEET INDEX

PAGE	TITLE
A1	COVER SHEET
A2	SITE PLAN
A3	LANDSCAPE PLAN - OVERVIEW
A4	LANDSCAPE PLAN - ENLARGED
A5	IRRIGATION PLAN
A6	FLOOR PLAN - 1ST LEVEL
A7	FLOOR PLAN - BASEMENT
A8	FOUNDATION
A9	DETAIL VIEWS
A10	FABRICATED COLUMN CAPS
A11	STEEL BEAM DETAILS
A12	STEEL BEAM DETAILS
A13	STEEL BEAM DETAILS
A14	WALL BRACING - 1ST LEVEL
A15	WALL BRACING - BASEMENT
A16	FLOOR LAYOUT - 1ST LEVEL
A17	ROOF LAYOUT - BASEMENT
A18	ROOF LAYOUT - 1ST LEVEL
A19	ROOF LAYOUT - OVERVIEW
A20	ELEVATIONS
A21	ELEVATIONS
A22	SECTION VIEWS
A23	SECTION VIEWS
A24	SECTION VIEWS
A25	SECTION VIEWS
A26	SECTION VIEWS
A27	SECTION VIEWS
E1	ELECTRICAL - 1ST LEVEL
E2	ELECTRICAL - BASEMENT

SMC Design
208.249.7268
Nampa, ID

SHEET NUMBER
A21
PAGE 21

NOT FOR CONSTRUCTION

PRELIMINARY
NOT FOR CONSTRUCTION

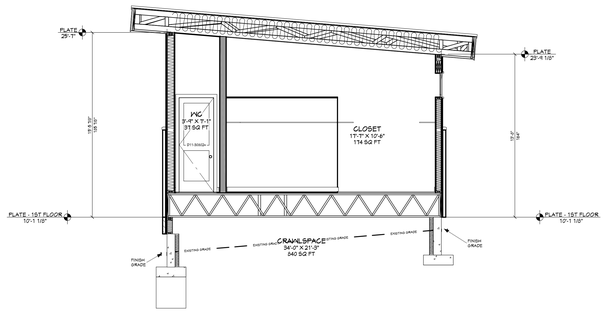

Ⓐ VIEW A - A
1/4 IN = 1 FT

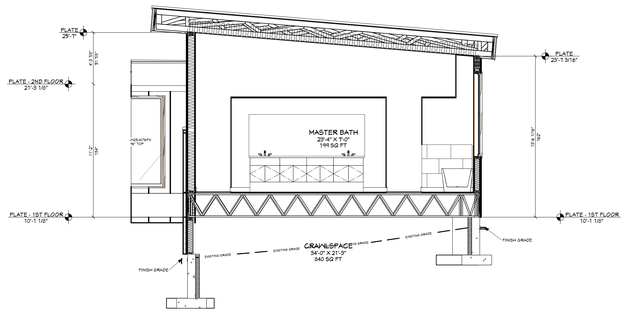

Ⓑ VIEW B - B
1/4 IN = 1 FT

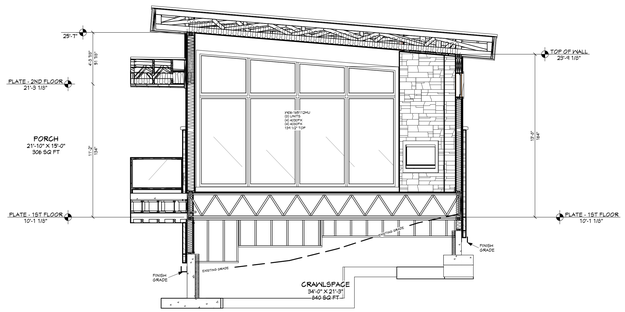

Ⓒ VIEW C - C
1/4 IN = 1 FT

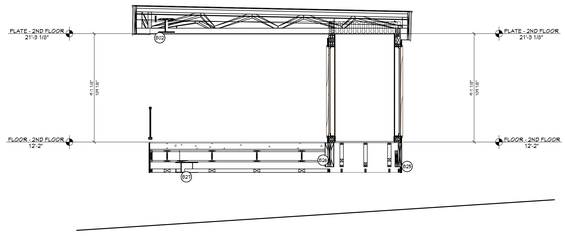

Ⓓ VIEW D - D
1/4 IN = 1 FT

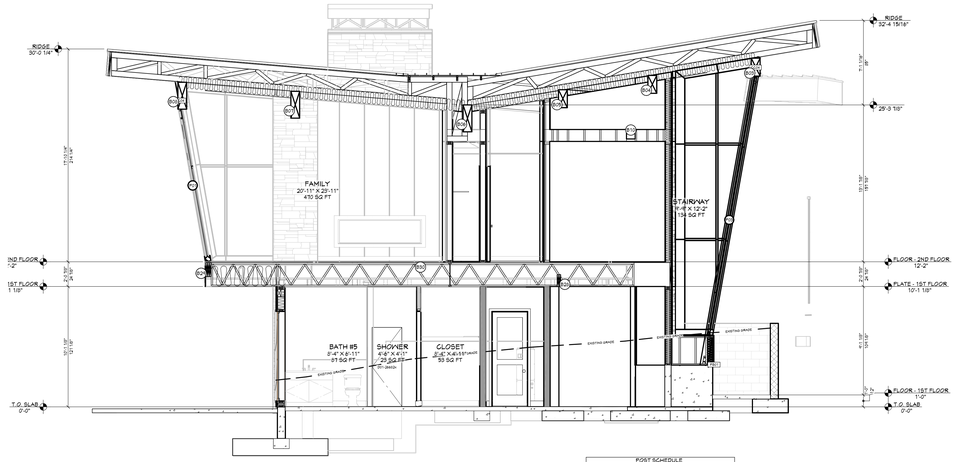

Ⓔ VIEW E - E
1/4 IN = 1 FT

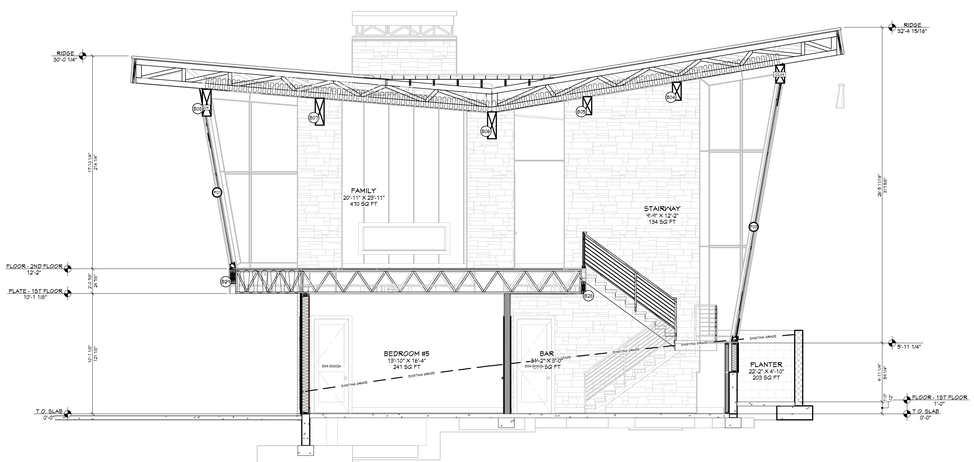

Ⓕ VIEW F - F
1/4 IN = 1 FT

POST SCHEDULE

NO	QTY	FLR	NOTES
P01	2	2	(2)X2 D.F. #2
P02	1	1	6X10
P03	2	1	(2)X12 D.F. #2
P04	2	1	(2)LVL 5 1/2 X 9 1/2
P05	1	2	4X4 D.F. #2
P06	2	2	(2)X12 D.F. #2
P07	1	2	POST - SW 2-1
P08	1	2	POST - SW 2-2
P09	1	1	POST - SW 11-2
P10	1	1	POST - SW 14-2
P11	1	1	POST - SW 14-3
P12	1	2	POST - SW 20-1
P13	1	2	POST - SW 20-2
P14	1	1	POST - SW 31-1
P15	1	1	POST - SW 31-2
P16	1	1	POST - SW 50-1
P17	1	1	POST - SW 50-2
P18	1	1	POST - SW 51-1
P19	1	1	POST - SW 51-2
P20	1	1	POST - SW 55-1
P21	1	1	POST - SW 55-2
P22	1	1	POST - SW 56-1
P23	1	1	POST - SW 56-2
P24	1	1	POST - SW 46-1
P25	1	1	POST - SW 50-3
P26	1	1	POST - SW 55-3
P27	1	1	POST - SW 56-3
P28	1	1	POST - SW 56-4
P29	1	1	POST - SW 56-5
P30	1	1	POST - SW 56-6
P31	1	1	POST - SW 51-3
P32	1	1	POST - SW 56-7
P33	1	1	POST - SW 51-4
P34	1	1	POST - SW 51-5

HEADER SCHEDULE

NO	TYPE
H01	(1) 6X12 D.F.
H02	(1) 5 1/2 X 9 1/2 GLM
H03	(1) 5 1/2 X 15 1/2 GLM
H04	(1) 6X10 D.F.
H05	(1) 6X12 D.F.
H06	(2) 2X12 D.F.
H07	(3) 1 3/4 X 5 1/2 LVL
H08	(5) 1 3/4 X 11 7/8 LVL
H09	(3) 1 3/4 X 11 7/8 LVL
H10	(3) 1 3/4 X 9 1/4 LVL
H11	(3) 1 3/4 X 14 LVL
H12	(3) 1 3/4 X 14 LVL

BEAM SCHEDULE (SEE STEEL NAILER DETAIL FOR STEEL BEAMS WHERE APPLICABLE)

NO	FLR	PLY(S)	NOTES	GTR. LG +/-	MIN BRG	T.O. BEAM	B.O. BEAM	CALC#
B01	2	3	(3)-2.11 1 3/4 X 11 7/8 - ABOVE TOP PLT	6'-11"		22'-8"	20'-8 7/8"	1
B02	2	1	(1)-2.12 5/16 X 13 7/8 (H12)430 ARHQ-50	26'-9"		22'-6 1/8"	21'-3"	2
B03	2	1	(1)-2.03 3/4 X 18	11'-9"		24'-1 5/8"	22'-3 7/8"	3
B04	2	1	(1)-2.04 3/4 X 13	11'-9"		24'-1 5/8"	22'-3 7/8"	4
B05	2	1	(1)-2.05 3/4 X 13	11'-9"		24'-1 5/8"	22'-3 7/8"	5
B06	2	1	(1)-2.06 3/4 X 21	10'-6"		24'-1 5/8"	22'-3 7/8"	6
B07	2	1	(1)-2.07 3/4 X 21	10'-6"		24'-1 5/8"	22'-3 7/8"	7
B08	2	1	(1)-2.08 3/4 X 21	10'-6"		24'-1 5/8"	22'-3 7/8"	8
B09	2	1	(1)-2.09 3/4 X 24	8'-3 3/8"		24'-1 5/8"	22'-3 7/8"	9
B10	2	1	(1)-2.10 3/4 X 24	10'-1 3/8"		24'-1 5/8"	22'-3 7/8"	10
B11	2	1	(1)-2.11 3/4 X 24	10'-6"		24'-1 5/8"	22'-3 7/8"	11
B12	2	1	(1)-2.12 3/4 X 24	10'-6"		24'-1 5/8"	22'-3 7/8"	12
B13	2	1	(1)-2.13 3/4 X 30	24'-6 1/4"		24'-6"	23'-2"	13
B14	2	1	(1)-2.14 3/4 X 30	24'-6 1/4"		24'-6"	23'-2"	14
B15	2	1	(1)-2.15 3/4 X 30	26'-6 1/4"		24'-6"	23'-2"	15
B16	2	1	(1)-2.16 3/4 X 21 1/2	26'-6"		24'-6"	23'-2"	16
B17	2	1	(1)-2.17 3/4 X 24	26'-6"		24'-10 5/8"	23'-10 1/8"	17
B18	2	1	(1)-10.5 1/2 X 21	11'-1 5/8"		26'-3 1/4"	25'-11 1/4"	18
B19	2	1	(1)-1.16			10'-3 1/8"	9'-4 1/8"	19
B20	2	1	(1)-2.20			10'-1 1/8"	9'-4 1/8"	20
B21	3	1	(1)-2.13 3/4 X 13	7'-9"		24'-4 5/8"	22'-10 5/8"	21
B22	3	1	(1)-2.05 3/4 X 13	6'-3"		24'-4 5/8"	22'-10 5/8"	22
B23	3	1	(1)-2.06 3/4 X 13	6'-3 3/8"		24'-4 5/8"	22'-10 5/8"	23
B24	3	1	(1)-2.07 3/4 X 13	9'-3"		24'-4 5/8"	22'-10 5/8"	24
B25	1	3	(3)-2.08 1 3/4 X 16	11'-11 1/4"		11'-3 1/8"	10'-1 1/8"	25
B26	1	3	(3)-2.09 1 3/4 X 24	21'-3 7/8"		12'-1 1/8"	10'-1 1/8"	26
B27	1	1	(1)-2.11 1/8 X 13 3/16 (H10) X 60 ARHQ-50	26'-3"		10'-3 5/8"	9'-4 5/8"	27
B28	1	3	(3)-2.03 1 3/4 X 11 7/8	11'-9"		11'-1"	10'-1 1/8"	28
B29	1	3	(3)-2.01 1 3/4 X 14	16'-1 7/8"		12'-1 1/8"	10'-1 1/8"	29
B30	1	1	(1)-1.50			10'-1 1/8"	9'-11 1/8"	30
B31	1	1	(1)-1.51			6'-2 3/8"	7'-8 5/8"	31
B32	1	3	(3)-2.02 3/4 X 18	12'-10 3/4"		11'-1 1/8"	10'-1 1/8"	32
B33	1	1	(1)-1.52					33
B34	1	3	(3)-2.03 3/4 X 18	22'-2 7/8"		11'-1 1/8"	10'-1 1/8"	34
B35	1	1	(1)-1.53					35
B36	1	1	(1)-1.56					36
B37	1	1	(1)-2.13 3/4 X 11 7/8	4'-1 3/4"		11'-1"	10'-1 1/8"	37
B38	2	3	(3)-2.13 3/4 X 11 7/8	4'-11 1/2"		22'-2 3/4"	21'-2 7/8"	38
B39	1	1	(1)-2.14 3/4 X 11 7/8	4'-6"		22'-2 3/4"	21'-2 7/8"	39
B40	1	1	(1)-1.54	2'-9 1/2"		11'-1"	10'-1 1/8"	40
B41	1	3	(3)-2.11 3/4 X 11 7/8	10'-0 3/4"		11'-1"	10'-1 1/8"	41
B42	1	3	(3)-2.03 3/4 X 14 1/2	16'		11'-3 5/8"	10'-1 1/8"	42
B43	1	3	(3)-2.11 3/4 X 13	14'-3 1/4"		13'-1 7/8"	12'-1 7/8"	43
B44	1	1	(1)-1.43					44
B45	1	1	(1)-2.15 1/8 X 15	15'-3 1/2"		11'-6 1/8"	10'-3 1/8"	45
B46	1	1	(1)-1.49					46
B47	1	1	(1)-2.12 1/2 X 15	10'-3"		11'-6 1/8"	10'-3 1/8"	47
B48	1	1	(1)-2.13 1/2 X 15	10'-3 1/2"		11'-6 1/8"	10'-3 1/8"	48
B49	1	1	(1)-2.05 1/2 X 15	4'-3 5/8"		11'-5 5/8"	10'-2 5/8"	49
B50	1	1	(1)-1.50					50
B51	1	1	(1)-2.15 1/8 X 15	9'-4 7/8"		11'-6"	10'-2"	51
B52	1	1	(1)-2.04 X 15	1'-6"		11'-1 1/8"	10'-4 1/8"	52
B53	1	1	(1)-1.50					53
B54	1	1	(1)-1.54					54
B55	1	1	(1)-1.55					55

SHEET INDEX

PAGE	TITLE
A1	COVER SHEET
A2	SITE PLAN
A3	LANDSCAPE PLAN - OVERVIEW
A4	LANDSCAPE PLAN - ENLARGED
A5	IRRIGATION PLAN
A6	FLOOR PLAN - 1ST LEVEL
A7	FLOOR PLAN - BASEMENT
A8	FOUNDATION
A9	DETAIL VIEWS
A10	FABRICATED COLUMN CAPS
A11	STEEL BEAM DETAILS
A12	STEEL BEAM DETAILS
A13	STEEL BEAM DETAILS
A14	WALL BRACING - 1ST LEVEL
A15	WALL BRACING - BASEMENT
A16	FLOOR LAYOUT - 1ST LEVEL
A17	ROOF LAYOUT - BASEMENT
A18	ROOF LAYOUT - 1ST LEVEL
A19	ROOF LAYOUT - OVERVIEW
A20	ELEVATIONS
A21	ELEVATIONS
A22	SECTION VIEWS
A23	SECTION VIEWS
A24	SECTION VIEWS
A25	SECTION VIEWS
A26	SECTION VIEWS
A27	SECTION VIEWS
E1	ELECTRICAL - 1ST LEVEL
E2	ELECTRICAL - BASEMENT

NOT FOR CONSTRUCTION

SCAN FOR CURRENT PLAN

SCAN FOR ENGINEERED CALCS

SCAN FOR 3D FRAMING MODEL

LICENSED ARCHITECT
AR-985249
06.19.2026
JESSICA PETTY
STATE OF IDAHO

ENGINEER STAMP AREA

PROJECT NO.
25-017

LEGACY RANCH LOT #13
ADAMS CO., ID

CONTRACTOR TO VERIFY ALL DETAILS, DIMENSIONS, AND SPECIFICATIONS AND REPORT ANY DISCREPANCIES OR ERRORS AND OMISSIONS TO ARCHITECT BEFORE ASSUMING ANY DESIGN RESPONSIBILITY. CONTRACTOR SHALL INDEMNIFY AND HOLD HARMLESS ARCHITECT FROM ANY CLAIMS, LITIGATIONS OR SUITS THAT MAY ARISE DURING CONSTRUCTION OR ANYTIME THEREAFTER.

SHEET SIZE
ARCH E2 (36" x 54")

INITIAL DATE: 11/19/2025
PRINT DATE: 11/17/2026

DRAWN BY:
Steve

SECTION VIEWS

SWC Design
SWC Design
208.249.1286
Nampa, ID

SHEET NUMBER
A22
PAGE 22

PRELIMINARY
NOT FOR CONSTRUCTION

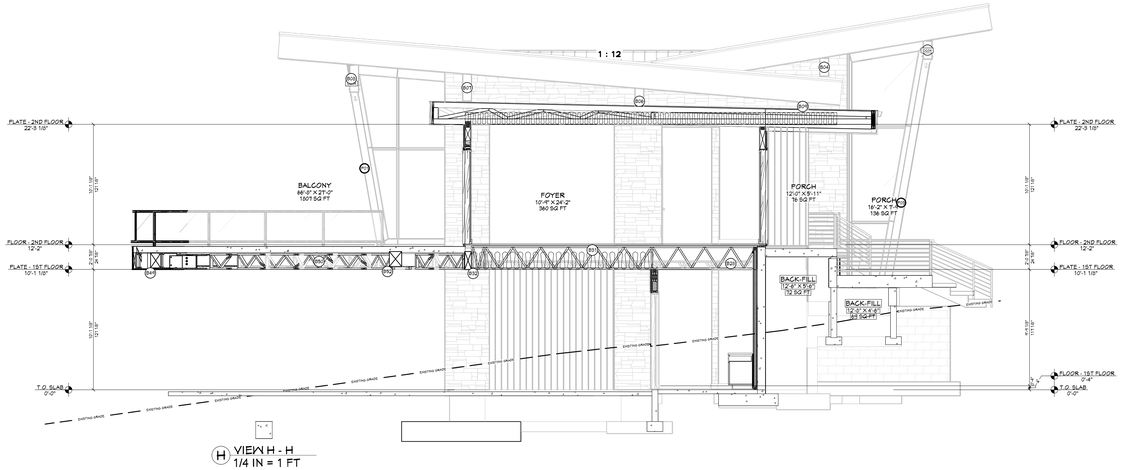

H VIEW H - H
1/4 IN = 1 FT

POST SCHEDULE			
NO	QTY	FLR	NOTES
P01	1	2	5X5 DF1 #2
P02	1	2	6X10
P03	1	2	6X10 DF1 #2
P04	1	2	4-1/2 X 5-1/2
P05	1	2	6X12
P06	2	2	10X10 DF1 #2
P07	1	2	POST - BM 2-1
P08	1	2	POST - BM 2-2
P09	2	1	POST - BM 11-2
P10	1	1	POST - BM 14-1
P11	1	1	POST - BM 14-2
P12	1	1	POST - BM 20-1
P13	1	1	POST - BM 20-2
P14	1	1	POST - BM 21-1
P15	1	1	POST - BM 21-2
P16	1	1	POST - BM 50-1
P17	1	1	POST - BM 50-2
P18	1	1	POST - BM 51-1
P19	1	1	POST - BM 51-2
P20	1	1	POST - BM 58-1
P21	1	1	POST - BM 58-2
P22	1	1	POST - BM 59-1
P23	1	1	POST - BM 59-2
P24	1	1	POST - BM 59-3
P25	1	1	POST - BM 59-4
P26	1	1	POST - BM 59-5
P27	1	1	POST - BM 59-6
P28	1	1	POST - BM 59-7
P29	1	1	POST - BM 59-8
P30	1	1	POST - BM 59-9
P31	1	1	POST - BM 59-10
P32	1	1	POST - BM 59-11
P33	1	1	POST - BM 59-12
P34	1	1	POST - BM 91-2

HEADER SCHEDULE	
NO	TYPE
H01	(1) 4X6 PT
H02	(1) 5 1/2 X 13 1/2 GLM
H03	(1) 5 1/2 X 11 1/2 GLM
H04	(1) 6X10 DF1
H05	(1) 6X12 D F
H06	(2) 2X12 D F
H07	(3) 1 3/4 X 11 1/2 VL
H08	(3) 1 3/4 X 11 7/8 VL
H09	(2) 1 3/4 X 11 7/8 VL
H10	(2) 1 3/4 X 14 VL
H11	(3) 1 3/4 X 14 VL
H12	(2) 1 3/4 X 14 LVL

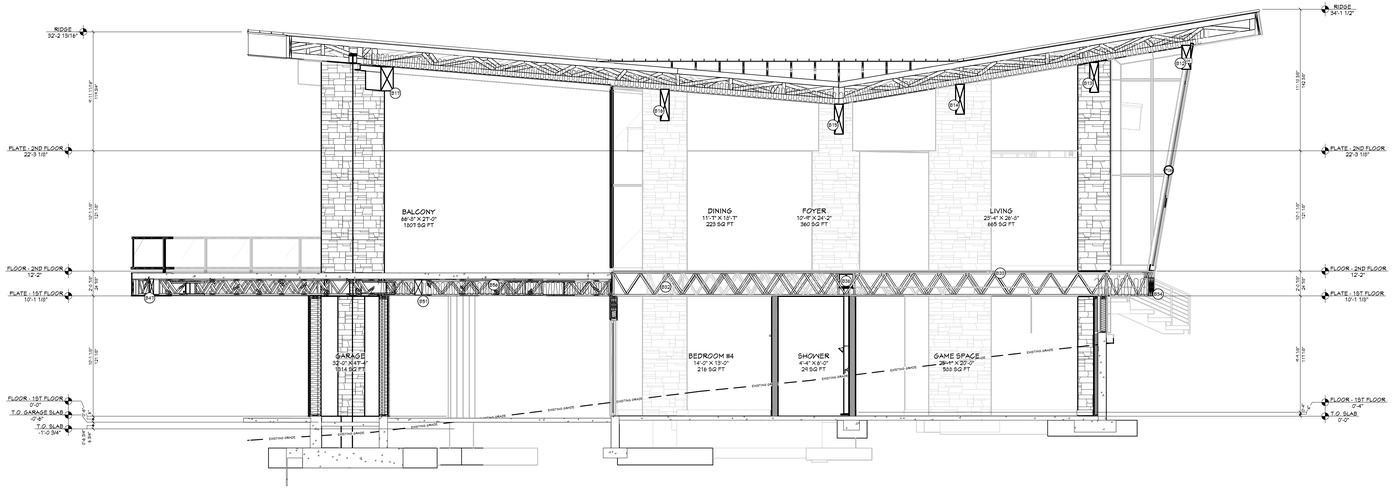

I VIEW I - I
1/4 IN = 1 FT

BEAM SCHEDULE (SEE STEEL NAILER DETAIL FOR STEEL BEAMS WHERE APPLICABLE)							
NO	FLR	PLYS	NOTES	CLR. LG +/-	MIN BRG	T.O. BEAM	B.O. BEAM
B01	2	3	(3) 1 3/4 X 11 7/8 ABOVE TOP PLY	8'-11"		22'-2	21'-3 1/8"
B02	2	1	(1) 5 1/2 X 13 1/2 (N1)(B5) ARE(B)	26'-4"		22'-8 1/8"	21'-9"
B03	2	1	(3) 1 3/4 X 11 7/8	19'-4"		22'-2 3/8"	21'-3 3/8"
B04	2	1	(3) 1 3/4 X 14	17'-4"		21'-10 3/8"	20'-11 3/8"
B05	2	1	(3) 1 3/4 X 14	15'-4"		21'-6 3/8"	20'-7 3/8"
B06	2	1	(3) 1 3/4 X 14	13'-4"		21'-2 3/8"	20'-3 3/8"
B07	2	1	(3) 1 3/4 X 14	30'-7 3/8"		22'-6 5/8"	21'-7 5/8"
B08	2	1	(3) 1 3/4 X 14	30'-1 5/8"		22'-6 5/8"	21'-7 5/8"
B09	2	1	(3) 1 3/4 X 14	10'-4"		24'-1 5/8"	23'-2 5/8"
B10	2	1	(3) 1 3/4 X 14	8'-1 1/2"		22'-11 5/8"	22'-0 5/8"
B11	2	1	(3) 1 3/4 X 11 7/8			11'-3 1/8"	10'-4 1/8"
B12	2	1	(3) 1 3/4 X 24	24'-4"		31'-1 1/8"	29'-1 1/8"
B13	2	1	(3) 1 3/4 X 20	24'-5"		29'-2"	27'-2"
B14	2	1	(3) 1 3/4 X 20	18'-7 3/4"		29'-2"	27'-2"
B15	2	1	(3) 1 3/4 X 20	4'-4"		29'-2"	27'-2"
B16	2	1	(3) 1 3/4 X 11 1/2	38'-4"		31'-8"	29'-8 1/2"
B17	2	1	(3) 1 3/4 X 24	34'-10 5/8"		24'-11 1/2"	23'-10 1/2"
B18	2	1	(3) 1 3/4 X 24	11'-1 5/8"		29'-2 1/4"	27'-2 1/4"
B19	2	1	(3) 1 3/4 X 20			29'-2 1/4"	27'-11 1/4"
B20	2	1	(3) 1 3/4 X 14			10'-1 1/8"	9'-2 1/8"
B21	2	1	(3) 1 3/4 X 14			10'-1 1/8"	9'-2 1/8"
B22	2	1	(3) 1 3/4 X 14			10'-1 1/8"	9'-2 1/8"
B23	2	1	(3) 1 3/4 X 14	5'-8"		24'-4 5/8"	23'-10 5/8"
B24	2	1	(3) 1 3/4 X 14	9'-4"		24'-4 5/8"	23'-10 5/8"
B25	2	1	(3) 1 3/4 X 14	9'-3 3/8"		24'-4 5/8"	23'-10 5/8"
B26	2	1	(3) 1 3/4 X 14	9'-7"		29'-4 1/8"	28'-10 1/8"
B27	3	1	(3) 1 3/4 X 14	15'-11 1/4"		11'-8 1/8"	10'-11 1/8"
B28	1	1	(4) 1 3/4 X 24	21'-5 1/8"		12'-1 1/8"	10'-1 1/8"
B29	1	1	(3) 1 3/4 X 24	26'-2"		12'-1 1/8"	10'-1 1/8"
B30	1	2	(3) 1 3/4 X 11 7/8	11'-9"		11'-1"	10'-1 1/8"
B31	1	2	(3) 1 3/4 X 14	14'-11 5/8"		12'-1 1/8"	10'-11 1/8"
B32	1	1	(3) 1 3/4 X 14			12'-1 1/8"	11'-1 1/8"
B33	1	1	(3) 1 3/4 X 14			12'-1 1/8"	11'-1 1/8"
B34	1	1	(3) 1 3/4 X 14	12'-10 3/4"		11'-1 1/8"	10'-1 1/8"
B35	1	1	(3) 1 3/4 X 13				
B36	1	1	(3) 1 3/4 X 13	22'-2 7/8"		11'-1 1/8"	10'-1 1/8"
B37	1	1	(3) 1 3/4 X 13				
B38	1	1	(3) 1 3/4 X 13				
B39	1	1	(3) 1 3/4 X 13				
B40	1	1	(3) 1 3/4 X 13				
B41	1	1	(3) 1 3/4 X 13				
B42	1	1	(3) 1 3/4 X 13				
B43	1	1	(3) 1 3/4 X 13				
B44	1	1	(3) 1 3/4 X 13				
B45	1	1	(3) 1 3/4 X 13				
B46	1	1	(3) 1 3/4 X 13				
B47	1	1	(3) 1 3/4 X 13				
B48	1	1	(3) 1 3/4 X 13				
B49	1	1	(3) 1 3/4 X 13				
B50	1	1	(3) 1 3/4 X 13				
B51	1	1	(3) 1 3/4 X 13				
B52	1	1	(3) 1 3/4 X 13				
B53	1	1	(3) 1 3/4 X 13				
B54	1	1	(3) 1 3/4 X 13				
B55	1	1	(3) 1 3/4 X 13				
B56	1	1	(3) 1 3/4 X 13				
B57	1	2	(3) 1 3/4 X 11 7/8	4'-3 3/4"		11'-1"	10'-1 1/8"
B58	2	1	(3) 1 3/4 X 11 7/8	9'-3 1/16"		24'-0 3/4"	23'-0 7/8"
B59	1	1	(3) 1 3/4 X 11 7/8	2'-8"		11'-1 1/8"	10'-1 1/8"
B60	1	1	(3) 1 3/4 X 24	4'-9 3/8"		12'-1 3/8"	10'-1 3/8"
B61	3	1	(3) 1 3/4 X 11 7/8	14'-3 3/4"		11'-1"	10'-1 1/8"
B62	1	1	(3) 1 3/4 X 14	16'		12'-5 5/8"	10'-1 1/8"
B63	3	1	(3) 1 3/4 X 14	14'-3 1/4"		12'-1 1/8"	10'-1 1/8"
B64	1	1	(4) 1 3/4 X 14				
B65	1	1	(4) 1 3/4 X 15	19'-3 1/2"		11'-8 1/8"	10'-3 1/8"
B66	1	1	(4) 1 3/4 X 15				
B67	1	1	(4) 1 3/4 X 15	10'-11"		11'-8 1/8"	10'-3 1/8"
B68	1	1	(4) 1 3/4 X 15	10'-5 1/2"		11'-8 1/8"	10'-3 1/8"
B69	1	1	(4) 1 3/4 X 15	9'-3 3/8"		11'-5 5/8"	10'-2 5/8"
B70	1	1	(4) 1 3/4 X 15				
B71	1	1	(5) 1 3/4 X 15			8'-4 1/8"	11'-5"
B72	1	1	(5) 1 3/4 X 15			1'-6"	11'-1 1/8"
B73	1	1	(5) 1 3/4 X 15				
B74	1	1	(5) 1 3/4 X 15				
B75	1	1	(5) 1 3/4 X 15				
B76	1	1	(5) 1 3/4 X 15				
B77	1	1	(5) 1 3/4 X 15				
B78	1	1	(5) 1 3/4 X 15				
B79	1	1	(5) 1 3/4 X 15				
B80	1	1	(5) 1 3/4 X 15				
B81	1	1	(5) 1 3/4 X 15				
B82	1	1	(5) 1 3/4 X 15				
B83	1	1	(5) 1 3/4 X 15				
B84	1	1	(5) 1 3/4 X 15				
B85	1	1	(5) 1 3/4 X 15				
B86	1	1	(5) 1 3/4 X 15				
B87	1	1	(5) 1 3/4 X 15				
B88	1	1	(5) 1 3/4 X 15				
B89	1	1	(5) 1 3/4 X 15				
B90	1	1	(5) 1 3/4 X 15				
B91	1	1	(5) 1 3/4 X 15				
B92	1	1	(5) 1 3/4 X 15				
B93	1	1	(5) 1 3/4 X 15				
B94	1	1	(5) 1 3/4 X 15				
B95	1	1	(5) 1 3/4 X 15				

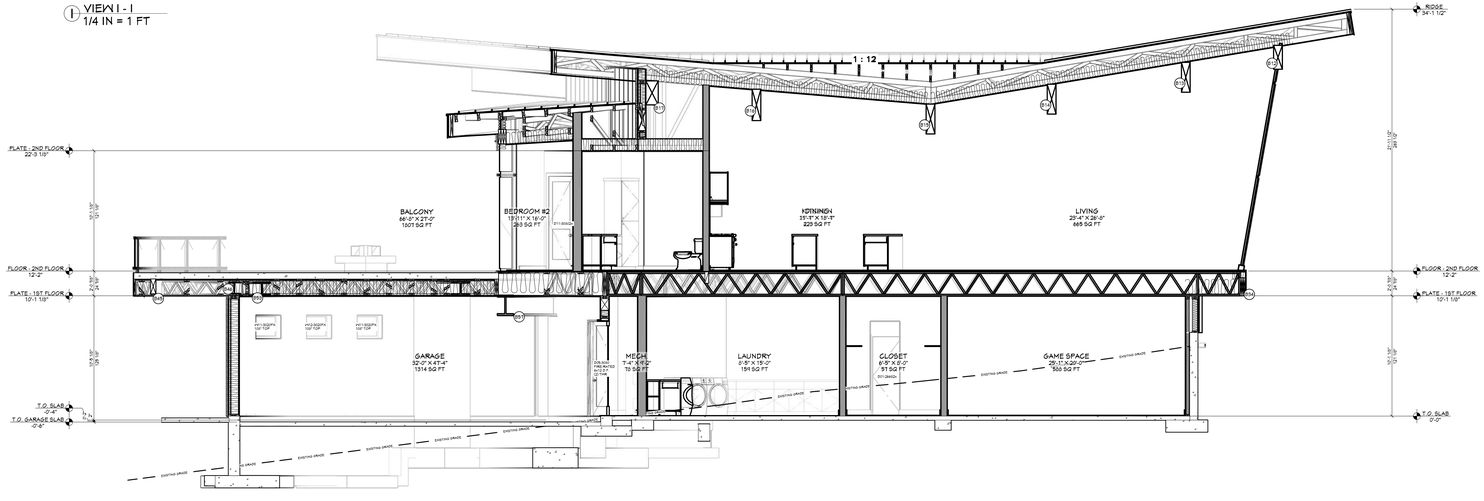

K VIEW K - K
1/4 IN = 1 FT

SHEET INDEX	
PAGE	TITLE
A1	COVER SHEET
A2	SITE PLAN
A3	LANDSCAPE PLAN - OVERVIEW
A4	LANDSCAPE PLAN - ENLARGED
A5	IRRIGATION PLAN
A6	FLOOR PLAN - 1ST LEVEL
A7	FLOOR PLAN - BASEMENT
A8	FOUNDATION
A9	DETAIL VIEWS
A10	FABRICATED COLUMN CAPS
A11	STEEL BEAM DETAILS
A12	STEEL BEAM DETAILS
A13	STEEL BEAM DETAILS
A14	WALL BRACING - 1ST LEVEL
A15	WALL BRACING - BASEMENT
A16	FLOOR LAYOUT - 1ST LEVEL
A17	ROOF LAYOUT - BASEMENT
A18	ROOF LAYOUT - 1ST LEVEL
A19	ROOF LAYOUT - OVERVIEW
A20	ELEVATIONS
A21	ELEVATIONS
A22	SECTION VIEWS
A23	SECTION VIEWS
A24	SECTION VIEWS
A25	SECTION VIEWS
A26	SECTION VIEWS
A27	SECTION VIEWS
E1	ELECTRICAL - 1ST LEVEL
E2	ELECTRICAL - BASEMENT

PRELIMINARY
NOT FOR CONSTRUCTION

SCAN FOR CURRENT PLAN

SCAN FOR ENGINEERED CALCS

SCAN FOR 3D FRAMING MODEL

LICENSED ARCHITECT
AR-985249
06.19.2026
JESSICA PETTY
STATE OF IDAHO

ENGINEER STAMP AREA

PROJECT NO.
25-017

CONTRACTOR TO VERIFY ALL DETAILS, DIMENSIONS, AND SPECIFICATIONS PRIOR TO CONSTRUCTION AND REPORT ANY DISCREPANCIES TO SMC DESIGN. SMC DESIGN HAS NO LIABILITY FOR CONSTRUCTION OR ANYTIME THEREAFTER. CONTRACTOR AGREES TO INDEMNIFY AND HOLD SMC DESIGN HARMLESS FROM ANY CLAIMS, LITIGATIONS OR SUITS THAT MAY ARISE DURING CONSTRUCTION.

LEGACY RANCH LOT #13
ADAMS CO., ID

DRAWN BY: Steve
INITIAL DATE: 11/19/2025
PRINT DATE: 11/17/2026
SHEET SIZE: ARCH E2 (36" x 54")

SECTION VIEWS

SMC Design
208.249.7288
Nampa, ID

SHEET NUMBER
A23
PAGE 23

PRELIMINARY
NOT FOR CONSTRUCTION

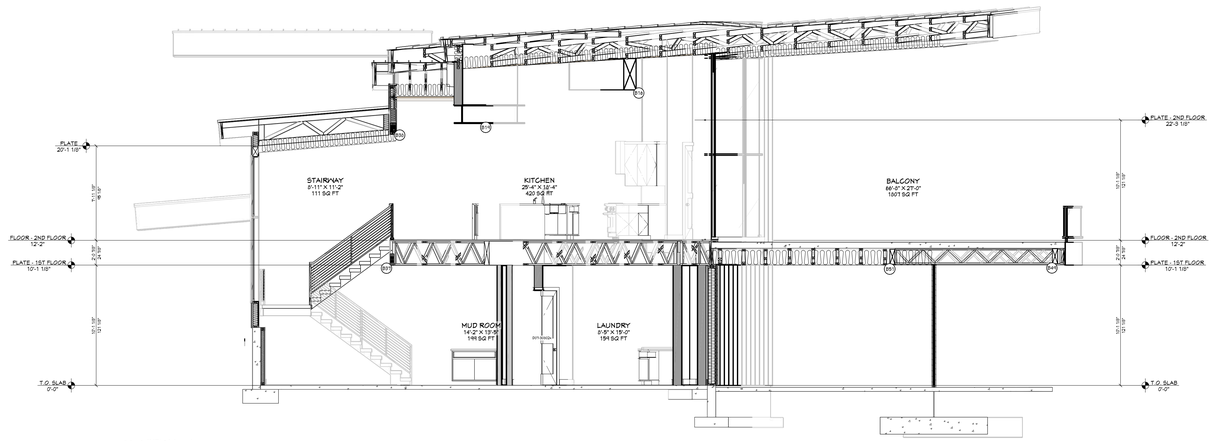

L VIEW L - L
1/4 IN = 1 FT

POST SCHEDULE			
NO	QTY	FLR	NOTES
P01	1	2	7X5 DF#2
P02	1	2	6X10
P03	1	2	6X10 DF #2
P04	1	2	4-1/2 X 5 1/2
P05	1	2	6X12
P06	2	1	10X10 DF #2
P07	1	2	POST - 6M 2-1
P08	1	2	POST - 6M 2-2
P09	2	1	POST - 6M 11-2
P10	1	1	POST - 6M 14-1
P11	1	1	POST - 6M 14-2
P12	1	2	POST - 6M 20-1
P13	1	2	POST - 6M 20-2
P14	1	2	POST - 6M 21-1
P15	1	2	POST - 6M 21-2
P16	1	1	POST - 6M 50-1
P17	1	1	POST - 6M 50-2
P18	1	1	POST - 6M 51-1
P19	1	1	POST - 6M 51-2
P20	1	1	POST - 6M 55-1
P21	1	1	POST - 6M 55-2
P22	1	1	POST - 6M 56-1
P23	1	1	POST - 6M 56-1
P24	1	1	POST - 6M 56-2
P25	1	1	POST - 6M 56-2
P26	1	1	POST - 6M 57-1
P27	1	1	POST - 6M 57-2
P28	1	1	POST - 6M 58-1
P29	1	1	POST - 6M 58-2
P30	1	1	POST - 6M 59-1
P31	1	1	POST - 6M 59-2
P32	1	1	POST - 6M 59-2
P33	1	1	POST - 6M 91-1
P34	1	1	POST - 6M 91-2

HEADER SCHEDULE	
NO	TYPE
H01	(1) 4X6 PLY
H02	(1) 5 1/2 X 13 1/2 GLM
H03	(1) 5 1/2 X 11 1/2 GLM
H04	(1) 6X10 DF
H05	(1) 6X12 D.F.
H06	(2) 2X12 D.F.
H07	(1) 3.54 X 9 1/2 LVL
H08	(1) 3.54 X 11 7/8 LVL
H09	(1) 3.54 X 11 7/8 LVL
H10	(1) 3.54 X 14 LVL
H11	(2) 1.54 X 18 LVL
H12	(3) 1.54 X 14 LVL

BEAM SCHEDULE (SEE STEEL NAILER DETAIL FOR STEEL BEAMS WHERE APPLICABLE)							
NO	FLR	PLY NO	NOTES	CLR. LG +/-	MIN BRG	T.O. BEAM	B.O. BEAM
B01	2	3	(5) 1.71 X 9 1/4	ABOVE TOP PLY		8'-11"	8'-2 1/8"
B02	2	1	(5) 2.02 X 9 7/8 X 13 1/8 PSL			24'-4"	23'-8 1/8"
B03	2	1	(5) 1.54 X 16			19'-4"	21'-3 3/8"
B04	2	1	(5) 1.54 X 16			17'-4"	19'-3 3/8"
B05	2	1	(5) 1.54 X 24			15'-4"	17'-3 3/8"
B06	2	1	(5) 1.54 X 24			13'-4"	15'-3 1/8"
B07	2	1	(5) 1.54 X 24			30'-1 3/8"	22'-2 5/8"
B08	2	1	(5) 1.54 X 24			30'-1 3/8"	22'-2 5/8"
B09	2	1	(5) 1.54 X 24			30'-1 3/8"	22'-2 5/8"
B10	2	1	(5) 1.54 X 24			10'-4"	24'-11 5/8"
B11	2	1	(5) 1.54 X 24			24'-11 5/8"	23'-4 5/8"
B12	2	1	(5) 1.54 X 24			29'-11 5/8"	22'-8 5/8"
B13	2	1	(5) 10 3/4 X 18			8'-1 1/2"	29'-11 5/8"
B14	2	1	(5) 10				31'-1 1/8"
B15	2	1	(5) 10				31'-1 1/8"
B16	2	1	(5) 10 3/4 X 18				31'-1 1/8"
B17	2	1	(5) 1.54 X 24			29'-4"	31'-1 1/8"
B18	2	1	(5) 1.54 X 24			27'-5 1/8"	29'-2"
B19	2	1	(5) 1.54 X 24			25'-5 3/4"	27'-3"
B20	2	1	(5) 1.54 X 24			23'-4"	25'-2"
B21	2	1	(5) 1.54 X 24			21'-4"	23'-2"
B22	2	1	(5) 1.54 X 24			19'-4"	21'-2"
B23	2	1	(5) 1.54 X 24			17'-4"	19'-2"
B24	2	1	(5) 1.54 X 24			15'-4"	17'-2"
B25	2	1	(5) 1.54 X 24			13'-4"	15'-2"
B26	1	1	(5) 1.54 X 24			21'-5 1/8"	12'-1 1/8"
B27	1	2	(5) 7 1/2 X 16			36'-2"	10'-8 5/8"
B28	1	2	(5) 1.54 X 11 7/8			11'-0"	11'-1"
B29	1	2	(5) 1.54 X 14			14'-11 5/8"	12'-1 1/8"
B30	1	1	(5) 3.01				12'-1 1/8"
B31	1	1	(5) 3.01				12'-1 1/8"
B32	1	1	(5) 10 3/4 X 18			12'-10 3/4"	12'-1 1/8"
B33	1	1	(5) 3.01				
B34	1	1	(5) 1.54 X 18			22'-2 7/8"	11'-1 1/8"
B35	1	1	(5) 3.01				10'-1 1/8"
B36	1	1	(5) 3.50				
B37	1	2	(5) 3.01 X 14 7/8			4'-3 3/4"	11'-1"
B38	1	2	(5) 3.50 X 14 7/8			4'-11 7/8"	10'-1 1/8"
B39	1	1	(5) 1.54 X 11 7/8			4'-8 3/8"	10'-1 1/8"
B40	1	1	(5) 3.01			4'-8 3/8"	10'-1 1/8"
B41	1	3	(5) 4.11 X 14 7/8			16'-3 3/4"	11'-1"
B42	1	1	(5) 4.21 X 14 1/2			18'	12'-5 5/8"
B43	1	1	(5) 4.51 X 14			14'-3 1/4"	13'-1 1/8"
B44	1	1	(5) 4.41				
B45	1	1	(5) 5.13 X 16			19'-3 1/2"	11'-6 1/8"
B46	1	1	(5) 4.61				
B47	1	1	(5) 5.13 X 16			10'-11"	11'-6 1/8"
B48	1	1	(5) 5.13 X 16			10'-5 1/2"	11'-6 1/8"
B49	1	1	(5) 4.13 X 16			4'-3 3/8"	11'-5 5/8"
B50	1	1	(5) 3.01				
B51	1	1	(5) 5.13 X 16			4'-4 7/8"	11'-5"
B52	1	1	(5) 1.54 X 16			1'-6"	11'-1 1/8"
B53	1	1	(5) 3.01				
B54	1	1	(5) 3.01				
B55	1	1	(5) 3.50				

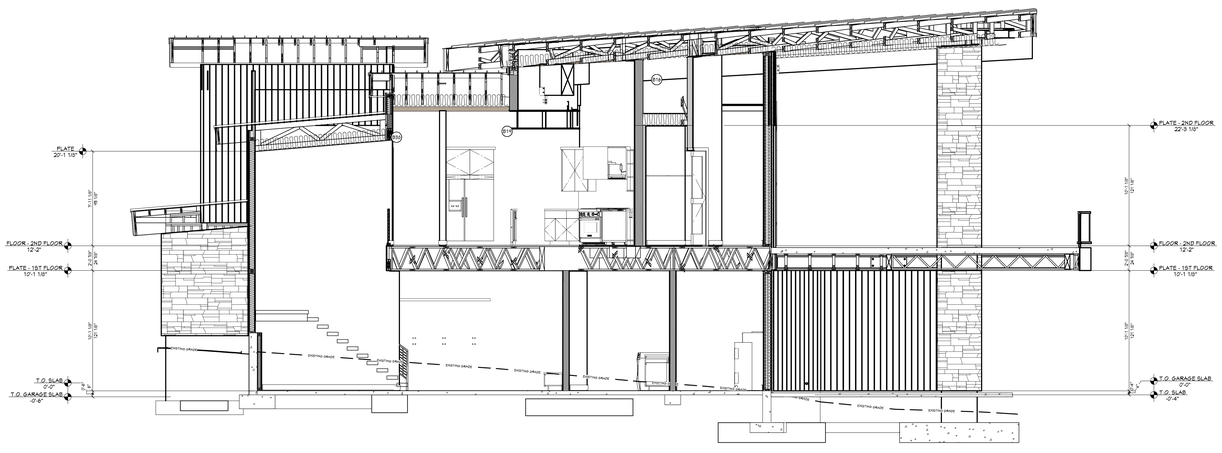

M VIEW M - M
1/4 IN = 1 FT

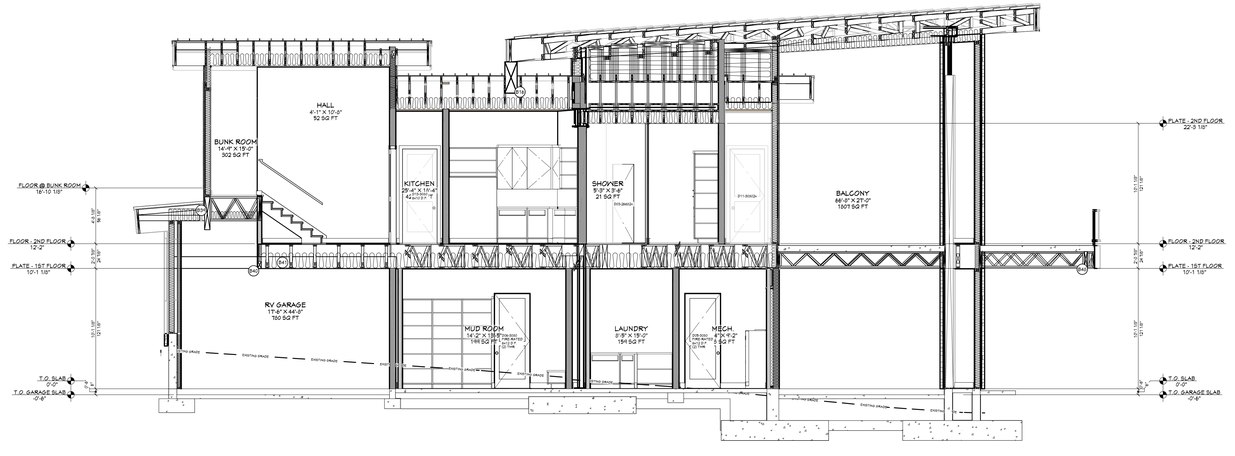

N VIEW N - N
1/4 IN = 1 FT

SHEET INDEX	
PAGE	TITLE
A1	COVER SHEET
A2	SITE PLAN
A3	LANDSCAPE PLAN - OVERVIEW
A4	LANDSCAPE PLAN - ENLARGED
A5	IRRIGATION PLAN
A6	FLOOR PLAN - 1ST LEVEL
A7	FLOOR PLAN - BASEMENT
A8	FOUNDATION
A9	DETAIL VIEWS
A10	FABRICATED COLUMN CAPS
A11	STEEL BEAM DETAILS
A12	STEEL BEAM DETAILS
A13	STEEL BEAM DETAILS
A14	WALL BRACING - 1ST LEVEL
A15	WALL BRACING - BASEMENT
A16	FLOOR LAYOUT - 1ST LEVEL
A17	ROOF LAYOUT - BASEMENT
A18	ROOF LAYOUT - 1ST LEVEL
A19	ROOF LAYOUT - OVERVIEW
A20	ELEVATIONS
A21	ELEVATIONS
A22	SECTION VIEWS
A23	SECTION VIEWS
A24	SECTION VIEWS
A25	SECTION VIEWS
A26	SECTION VIEWS
A27	SECTION VIEWS
E1	ELECTRICAL - 1ST LEVEL
E2	ELECTRICAL - BASEMENT

SCAN FOR CURRENT PLAN

SCAN FOR ENGINEERED CALCS

SCAN FOR 3D FRAMING MODEL

LICENSED ARCHITECT
AR-985249
06.19.2026
JESSICA PETTY
STATE OF IDAHO

ENGINEER STAMP AREA

PROJECT NO.
25-017

CONTRACTOR TO VERIFY ALL DETAILS, DIMENSIONS, AND SPECIFICATIONS PRIOR TO CONSTRUCTION AND REPORT ANY DISCREPANCIES TO SMC DESIGN. SMC DESIGN IS NOT RESPONSIBLE FOR CONSTRUCTION MEANS, METHODS, OR SAFETY DURING CONSTRUCTION OR ANYTIME THEREAFTER. CONTRACTOR AND OWNER AGREE TO HOLD SMC DESIGN HARMLESS FROM ANY CLAIMS, LITIGATIONS OR SUITS THAT MAY ARISE DURING CONSTRUCTION.

LEGACY RANCH LOT #13
ADAMS CO., ID

INITIAL DATE: 11/19/2025
PRINT DATE: 11/17/2026

SHEET SIZE
ARCH E2 (36" x 54")

DRAWN BY:
Steve

SECTION VIEWS

SMC Design
SMC Design
208.249.7288
Nampa, ID

SHEET NUMBER
A24
PAGE 24

NOT FOR CONSTRUCTION

PRELIMINARY
NOT FOR CONSTRUCTION

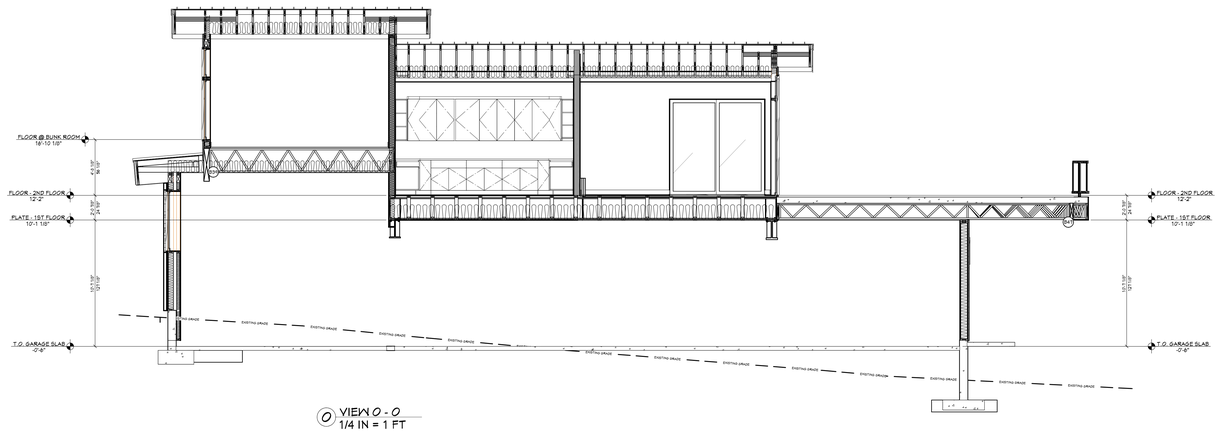

Ⓞ VIEW O - O
1/4 IN = 1 FT

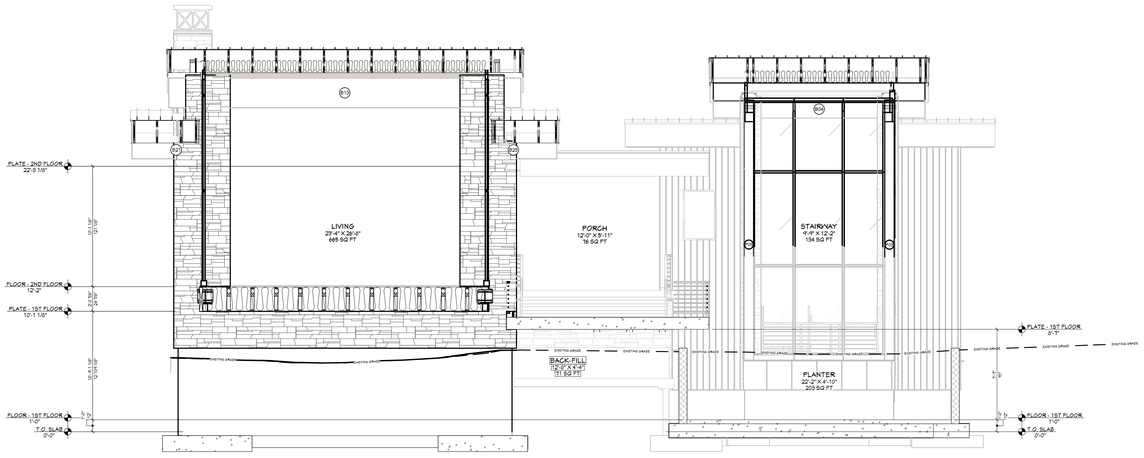

Ⓟ VIEW P - P
1/4 IN = 1 FT

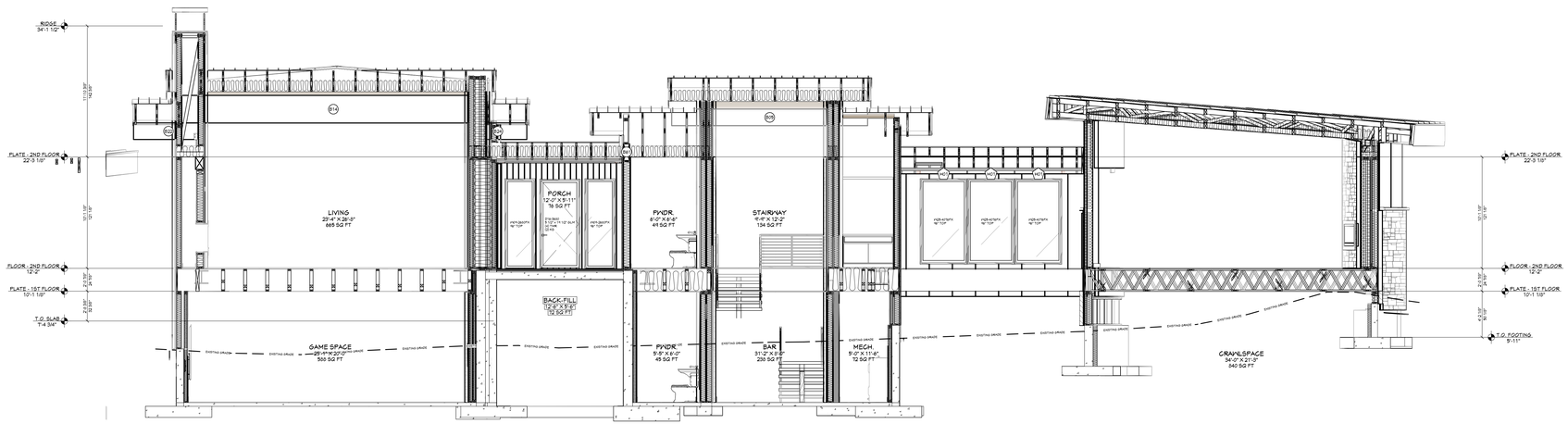

Ⓠ VIEW Q - Q
1/4 IN = 1 FT

POST SCHEDULE			
NO	QTY	FLR	NOTES
P01	1	2	6X6 DF#2
P02	1	2	6X10
P03	1	2	6X10 DF #2
P04	1	2	4-1/2 X 5-1/2
P05	1	2	6X12
P06	2	2	10X10 DF #2
P07	1	2	POST - BM 2-1
P08	1	2	POST - BM 2-2
P09	2	1	POST - BM 11-2
P10	1	1	POST - BM 14-1
P11	1	1	POST - BM 14-2
P12	1	1	POST - BM 20-1
P13	1	1	POST - BM 20-2
P14	1	1	POST - BM 21-1
P15	1	1	POST - BM 21-2
P16	1	1	POST - BM 50-1
P17	1	1	POST - BM 50-2
P18	1	1	POST - BM 51-1
P19	1	1	POST - BM 51-2
P20	1	1	POST - BM 58-1
P21	1	1	POST - BM 58-2
P22	1	1	POST - BM 59-2
P23	1	1	POST - BM 56-1
P24	1	1	POST - BM 56-2
P25	1	1	POST - BM 48-1
P26	1	1	POST - BM 52-2
P27	1	1	POST - BM 53-2
P28	1	1	POST - BM 54-2
P29	1	1	POST - BM 55-2
P30	1	1	POST - BM 58-2
P31	1	1	POST - BM 59-1
P32	1	1	POST - BM 58-2
P33	1	1	POST - BM 91-1
P34	1	1	POST - BM 91-2

HEADER SCHEDULE	
NO	TYPE
H01	(1) 4X6 PT
H02	(1) 5 1/2 X 13 1/2 GLM
H03	(1) 5 1/2 X 15 1/2 GLM
H04	(1) 6X12 DF
H05	(1) 6X12 D.F.
H06	(2) 2X12 D.F.
H07	(3) 1 3/4 X 4 1/2 LVL
H08	(3) 1 3/4 X 7 1/4 LVL
H09	(3) 1 3/4 X 11 7/8 LVL
H10	(3) 1 3/4 X 14 LVL
H11	(2) 1 3/4 X 18 LVL
H12	(2) 1 3/4 X 14 LVL

BEAM SCHEDULE (SEE STEEL NAILER DETAIL FOR STEEL BEAMS WHERE APPLICABLE)							
NO	FLR	PLYS	NOTES	COL LG +/- MIN END	T.O. BEAM	B.O. BEAM	CALC #
B01	2	3	(3) 1 3/4 X 11 7/8 ABOVE TOP PLY	6'-11"	22'-2	21'-3 1/8"	1
B02	2	1	(3) 1 3/4 X 7 1/4 X 13 1/8 (N1)26SI, A49Q 50	26'-4"	22'-2 1/8"	21'-9"	2
B03	2	1	(3) 1 3/4 X 14	19'-4"	22'-2 1/8"	21'-3 1/2"	3
B04	2	1	(3) 1 3/4 X 14	17'-4"	22'-2 1/8"	20'-9 5/8"	4
B05	2	1	(3) 1 3/4 X 14	11'-4"	22'-2 1/8"	20'-3 7/8"	5
B06	2	1	(3) 1 3/4 X 14	33'-4"	22'-2 1/8"	22'-1 1/2"	6
B07	2	1	(3) 1 3/4 X 14	30'-1 3/8"	22'-2 1/8"	21'-8 5/8"	7
B08	2	1	(3) 1 3/4 X 14	30'-1 3/8"	22'-2 1/8"	21'-8 5/8"	8
B09	2	1	(3) 1 3/4 X 14	10'-4"	22'-2 1/8"	21'-1 5/8"	9
B10	2	1	(3) 1 3/4 X 14	8'-1 1/2"	22'-2 1/8"	20'-8 3/4"	10
B11	2	1	(3) 1 3/4 X 14		11'-3 1/8"	10'-1 1/8"	11
B12	2	1	(3) 1 3/4 X 24	29'-4"	11'-1 1/8"	10'-1 1/8"	12
B13	2	1	(3) 1 3/4 X 20	24'-5 7/8"	22'-2"	21'-1"	13
B14	2	1	(3) 1 3/4 X 20	19'-7 3/4"	22'-2"	20'-3"	14
B15	2	1	(3) 1 3/4 X 20	40'-2"	22'-2"	20'-3"	15
B16	2	1	(3) 1 3/4 X 11 1/2	38'-4"	22'-2"	20'-4 1/2"	16
B11	2	1	(3) 1 3/4 X 24	34'-10 5/8"	24'-10 1/2"	23'-10 1/2"	11
B13	2	1	(5) 1 3/4 X 21	17'-1 5/8"	29'-2 1/4"	28'-11 1/4"	13
B14	2	1	(3) 1 3/4 X 20		11'-3 1/8"	8'-4 1/8"	14
B20	2	1	(3) 1 3/4 X 20		11'-3 1/8"	8'-4 1/8"	20
B21	2	1	(3) 1 3/4 X 13	5'-8"	24'-4 5/8"	22'-10 5/8"	21
B22	2	1	(3) 1 3/4 X 13	9'-3"	24'-4 5/8"	22'-10 5/8"	22
B23	2	1	(3) 1 3/4 X 13	9'-3 3/8"	24'-4 5/8"	22'-10 5/8"	23
B24	2	1	(3) 1 3/4 X 13	9'-3"	29'-4 1/8"	28'-10 1/8"	24
B25	1	1	(3) 1 3/4 X 16	15'-11 1/4"	11'-3 1/8"	10'-1 1/8"	25
B26	1	1	(4) 1 3/4 X 24	21'-5 7/8"	12'-1 1/8"	10'-1 1/8"	26
B27	1	1	(5) 1 3/4 X 24	26'-2"	12'-8 5/8"	9'-4 3/8"	27
B28	1	2	(5) 1 3/4 X 11 7/8	11'-9"	11'-1"	10'-1 1/8"	28
B29	1	1	(4) 1 3/4 X 14	14'-11 5/8"	12'-1 1/8"	10'-11 1/8"	29
B30	1	1	(5) 1 3/4		12'-1 1/8"	8'-11 1/8"	30
B31	1	1	(5) 1 3/4		11'-3 1/8"	10'-1 1/8"	31
B32	1	1	(3) 1 3/4 X 13	12'-10 3/4"	11'-3 1/8"	10'-1 1/8"	32
B33	1	1	(5) 1 3/4				33
B34	1	1	(4) 1 3/4 X 13	22'-2 7/8"	11'-1 1/8"	10'-1 1/8"	34
B35	1	1	(5) 1 3/4				35
B36	1	1	(5) 1 3/4				36
B37	1	2	(5) 1 3/4 X 11 7/8	4'-1 3/4"	11'-1"	10'-1 1/8"	37
B38	1	2	(5) 1 3/4 X 11 7/8	4'-1 7/8"	4'-0 3/4"	3'-0 7/8"	38
B39	1	1	(3) 1 3/4 X 11 7/8	2'-8 3/8"	12'-1 1/8"	10'-1 1/8"	39
B40	1	1	(2) 1 3/4 X 24	4'-8 3/8"	12'-1 1/8"	10'-1 1/8"	40
B41	1	1	(3) 1 3/4 X 11 7/8	14'-2 3/4"	11'-1"	10'-1 1/8"	41
B42	1	1	(4) 1 3/4 X 16 1/2	18"	12'-5 5/8"	10'-1 1/8"	42
B43	1	1	(4) 1 3/4 X 13	14'-3 1/4"	12'-1 1/8"	10'-1 1/8"	43
B44	1	1	(4) 1 3/4				44
B45	1	1	(5) 1 3/4 X 18	18'-3 1/2"	11'-8 1/8"	10'-3 1/8"	45
B46	1	1	(4) 1 3/4				46
B47	1	1	(3) 1 3/4 X 18	10'-11"	11'-8 1/8"	10'-3 1/8"	47
B48	1	1	(3) 1 3/4 X 15	10'-5 1/2"	11'-8 1/8"	10'-3 1/8"	48
B49	1	1	(4) 1 3/4 X 15	9'-3 3/8"	11'-5 5/8"	10'-2 5/8"	49
B50	1	1	(5) 1 3/4				50
B51	1	1	(5) 1 3/4 X 18	8'-4 1/2"	11'-8"	10'-2"	51
B52	1	1	(5) 1 3/4 X 15	1'-6"	11'-1 1/8"	10'-1 1/8"	52
B53	1	1	(5) 1 3/4				53
B54	1	1	(5) 1 3/4				54
B55	1	1	(5) 1 3/4				55

SHEET INDEX	
PAGE	TITLE
A1	COVER SHEET
A2	SITE PLAN
A3	LANDSCAPE PLAN - OVERVIEW
A4	LANDSCAPE PLAN - ENLARGED
A5	IRRIGATION PLAN
A6	FLOOR PLAN - 1ST LEVEL
A7	FLOOR PLAN - BASEMENT
A8	FOUNDATION
A9	DETAIL VIEWS
A10	FABRICATED COLUMN CAPS
A11	STEEL BEAM DETAILS
A12	STEEL BEAM DETAILS
A13	STEEL BEAM DETAILS
A14	WALL BRACING - 1ST LEVEL
A15	WALL BRACING - BASEMENT
A16	FLOOR LAYOUT - 1ST LEVEL
A17	ROOF LAYOUT - BASEMENT
A18	ROOF LAYOUT - 1ST LEVEL
A19	ROOF LAYOUT - OVERVIEW
A20	ELEVATIONS
A21	ELEVATIONS
A22	SECTION VIEWS
A23	SECTION VIEWS
A24	SECTION VIEWS
A25	SECTION VIEWS
A26	SECTION VIEWS
A27	SECTION VIEWS
E1	ELECTRICAL - 1ST LEVEL
E2	ELECTRICAL - BASEMENT

PRELIMINARY
NOT FOR CONSTRUCTION

SCAN FOR CURRENT PLAN

SCAN FOR ENGINEERED CALCS

SCAN FOR 3D FRAMING MODEL

LICENSED ARCHITECT
AR-985249
06.19.2026
JESSICA PETTY
STATE OF IDAHO

ENGINEER STAMP AREA

PROJECT NO.
25-017

LEGACY RANCH LOT #13
ADAMS CO., ID

CONTRACTOR TO VERIFY ALL DETAILS, DIMENSIONS, AND SPECIFICATIONS PRIOR TO CONSTRUCTION AND REPORT ANY DISCREPANCIES OR ERRORS TO SMC DESIGN. SMC DESIGN IS NOT RESPONSIBLE FOR CONSTRUCTION MEANS, METHODS, TECHNIQUES, SEQUENCES OR PROCEDURES OF CONSTRUCTION OR ANY CLAIMS, LITIGATIONS OR SUITS THAT MAY ARISE DURING CONSTRUCTION OR ANYTIME THEREAFTER. FROM ANY CLAIMS, LITIGATIONS OR SUITS THAT MAY ARISE DURING CONSTRUCTION OR ANYTIME THEREAFTER.

SHEET SIZE: ARCH E2 (36" x 54")

INITIAL DATE: 11/19/2025
PRINT DATE: 11/17/2026

DRAWN BY: Steve

SECTION VIEWS

SMC Design
208.249.7288
Nampa, ID

SHEET NUMBER
A25
PAGE 25

PRELIMINARY
NOT FOR CONSTRUCTION

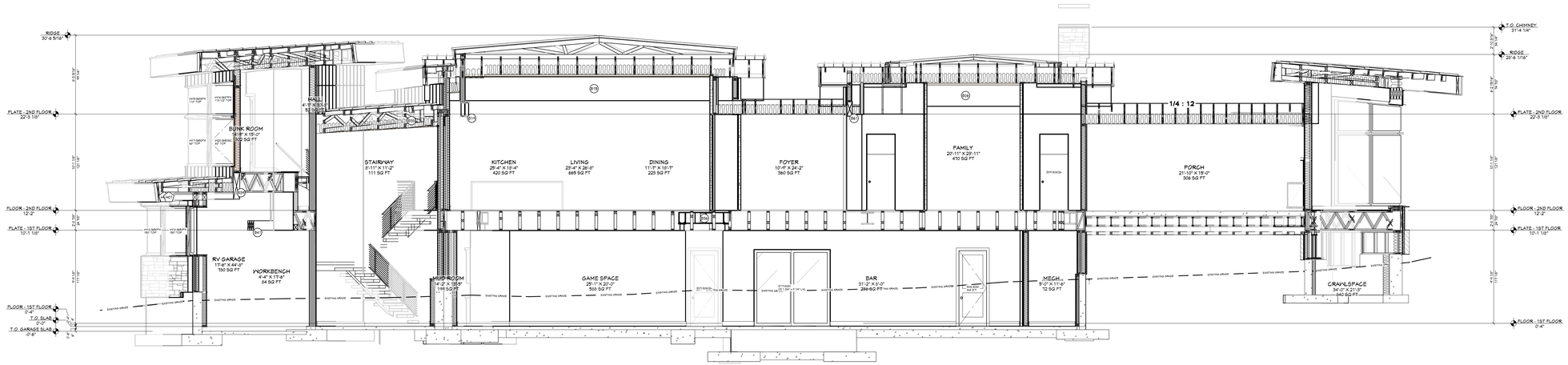

R VIEW R - R
1/4 IN = 1 FT

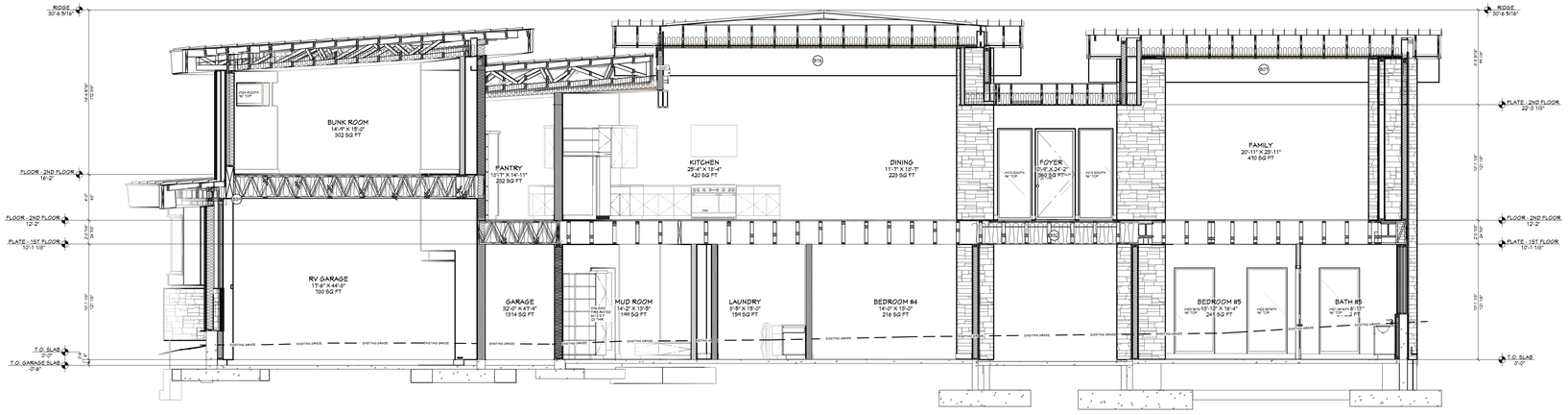

S VIEW S - S
1/4 IN = 1 FT

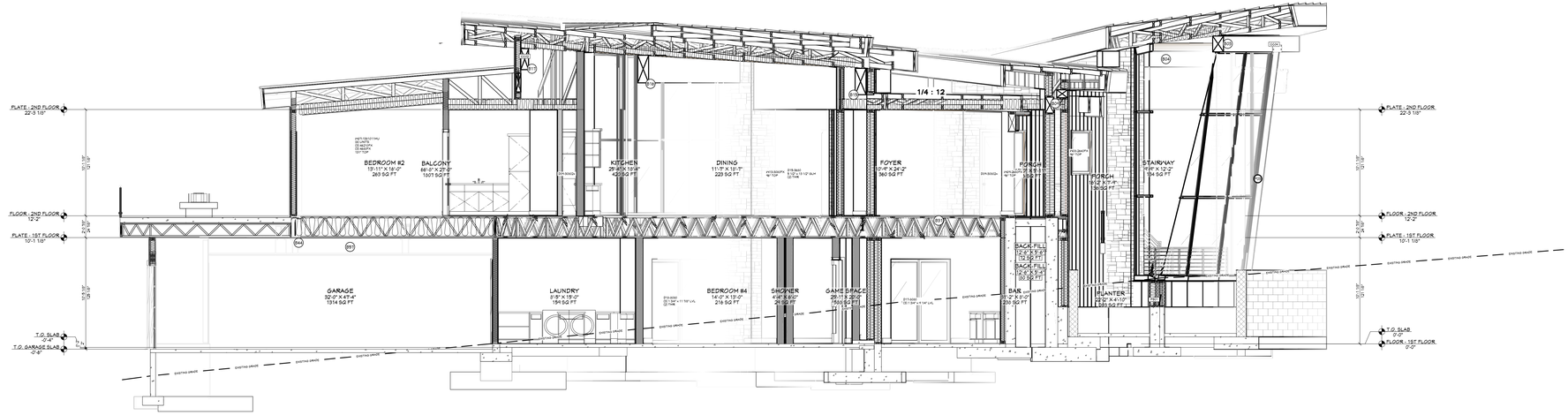

T VIEW T - T
1/4 IN = 1 FT

POST SCHEDULE			
NO	QTY	FLR	NOTES
P01	4	2	3X6 D.F. #2
P02	1	2	6X10
P03	3	2	6X10 D.F. #2
P04	1	2	6 1/2 X 6 1/2
P05	3	2	10X10
P06	2	2	10X10 D.F. #2
P07	1	3	POST - BM 2-1
P08	1	3	POST - BM 2-4
P09	2	3	POST - BM 11-2
P10	1	3	POST - BM 11-4
P11	1	3	POST - BM 19-1
P12	1	3	POST - BM 19-2
P13	3	3	POST - BM 19-3
P14	4	3	POST - BM 20-1
P15	4	3	POST - BM 21-1
P16	1	1	POST - BM 21-2
P17	1	1	POST - BM 30-1
P18	1	1	POST - BM 30-2
P19	1	1	POST - BM 31-1
P20	1	1	POST - BM 31-2
P21	1	1	POST - BM 32-1
P22	1	1	POST - BM 38-1
P23	1	1	POST - BM 38-2
P24	1	1	POST - BM 39-1
P25	1	1	POST - BM 39-2
P26	1	1	POST - BM 46-1
P27	1	1	POST - BM 50-2
P28	1	1	POST - BM 52-1
P29	1	1	POST - BM 55-1
P30	1	1	POST - BM 55-2
P31	1	1	POST - BM 55-3
P32	1	1	POST - BM 55-4
P33	1	1	POST - BM 56-1
P34	1	1	POST - BM 91-2

HEADER SCHEDULE	
NO	TYPE
H01	(1) 4X10 D.F.
H02	(1) 5 1/2 X 13 1/2 GLM
H03	(1) 5 1/2 X 14 1/2 GLM
H04	(1) 6X10 D.F.
H05	(1) 6X12 D.F.
H06	(2) 4X12 D.F.
H07	(2) 1.3/4 X 11 7/8 LVL
H08	(3) 1.3/4 X 11 1/4 LVL
H09	(3) 1.3/4 X 11 7/8 LVL
H10	(3) 1.3/4 X 11 7/8 LVL
H11	(3) 1.3/4 X 14 LVL
H12	(3) 1.3/4 X 14 LVL

BEAM SCHEDULE (SEE STEEL NAILER DETAIL FOR STEEL BEAMS WHERE APPLICABLE)							
NO	FLR	FLY/SO	NOTES	CTR. LD +/-	NON END	T.O. BEAM	B.O. BEAM
B01	2	3	(5) 1 1/4 X 11 7/8 - ABOVE TOP PLY	6'-11"		22'-0"	21'-3 1/8"
B02	2	1	(5) 20 1/2 X 13 1/8 (VU=230) ARTIZ 50	26'-0"		22'-0 1/8"	21'-5"
B03	2	1	(3) 5 1/2 X 14	11'-4"		24'-2 1/2"	22'-3 1/8"
B04	2	1	(3) 5 1/2 X 14	11'-4"		24'-2 1/2"	22'-3 1/8"
B05	2	1	(3) 5 1/2 X 14	11'-4"		24'-2 1/2"	22'-3 1/8"
B06	2	1	(3) 5 1/2 X 14	11'-4"		28'-3 1/8"	26'-7 1/8"
B07	2	1	(3) 5 1/2 X 14	11'-4"		28'-3 1/8"	26'-7 1/8"
B08	2	1	(3) 5 1/2 X 24	20'-5 5/8"		28'-3 1/8"	26'-7 1/8"
B09	2	1	(3) 5 1/2 X 24	20'-1 5/8"		24'-2 5/8"	22'-3 1/8"
B10	2	1	(3) 5 1/2 X 14	10'-4"		24'-2 5/8"	22'-3 1/8"
B11	2	1	(3) 5 1/2 X 14	8'-1 1/2"		28'-11 5/8"	27'-3 5/8"
B12	2	1	(5) 11			11'-10 1/8"	10'-1 1/8"
B13	2	1	(3) 1 3/4 X 24	25'-6"		31'-1 1/8"	29'-1 1/8"
B14	2	1	(3) 1 3/4 X 24	25'-6 1/4"		29'-2"	27'-0"
B15	2	1	(3) 1 3/4 X 30	27'-10 3/4"		31'-10"	29'-9"
B16	2	1	(3) 1 3/4 X 18	15'-5"		29'-2"	27'-0"
B17	2	1	(3) 1 3/4 X 24	19'-5"		24'-6 1/8"	22'-7 1/8"
B18	2	1	(3) 1 3/4 X 24	9'-10 1/2"		24'-10 1/2"	23'-1 1/2"
B19	2	1	(3) 1 3/4 X 24	11'-1 5/8"		29'-2 1/4"	27'-3 1/8"
B20	2	1	(5) 10			10'-3 1/8"	9'-4 1/8"
B21	2	1	(5) 10			10'-1 1/8"	9'-4 1/8"
B22	2	1	(3) 1 3/4 X 18	9'-9"		24'-4 5/8"	22'-7 5/8"
B23	2	1	(3) 1 3/4 X 18	6'-3 3/8"		24'-4 5/8"	22'-7 5/8"
B24	2	1	(3) 1 3/4 X 18	5'-3 3/8"		24'-4 5/8"	22'-7 5/8"
B25	2	1	(3) 1 3/4 X 18	4'-1 3/8"		24'-4 5/8"	22'-7 5/8"
B26	1	1	(3) 1 3/4 X 18	17'-11 1/4"		11'-8 1/8"	10'-11 1/8"
B27	1	1	(3) 5 1/2 X 24	21'-5 7/8"		12'-1 1/8"	10'-1 1/8"
B28	1	1	(3) 11 1/2 X 13 3/16 VU12 X 60 ARTIZ 50	26'-2"		12'-5 5/8"	10'-1 1/8"
B29	1	2	(5) 20 1 3/4 X 11 7/8	11'-9"		11'-1"	10'-1 1/8"
B30	1	1	(3) 1 3/4 X 14	14'-11 3/8"		12'-1 1/8"	10'-11 1/8"
B31	1	1	(5) 10			12'-1 1/8"	11'-1 1/8"
B32	1	1	(5) 10			11'-10 1/8"	10'-11 1/8"
B33	1	1	(3) 1 3/4 X 14			11'-8 1/8"	10'-11 1/8"
B34	1	1	(5) 10		12'-10 3/4"	11'-1 1/8"	10'-1 1/8"
B35	1	1	(3) 1 3/4 X 18	22'-2 1/8"		11'-1 1/8"	10'-1 1/8"
B36	1	1	(5) 9				
B37	1	2	(5) 20 1 3/4 X 11 7/8	4'-7 3/4"		11'-1"	10'-1 1/8"
B38	2	1	(3) 1 3/4 X 11 7/8	4'-11 1/2"		22'-2 3/4"	21'-0 3/4"
B39	1	1	(3) 5 1/2 X 30	2'-5"		18'-11 7/8"	16'-11 7/8"
B40	1	1	(5) 10	1'-8 1/8"		10'-3 1/8"	9'-4 1/8"
B41	1	1	(3) 1 3/4 X 11 7/8	14'-3 3/4"		12'-1 1/8"	10'-1 1/8"
B42	1	1	(3) 1 3/4 X 11 1/2	16'		17'-2 5/8"	16'-1 1/8"
B43	1	1	(3) 1 3/4 X 11	15'-3 1/4"		19'-1 1/8"	18'-1 1/8"
B44	1	1	(5) 44				
B45	1	1	(3) 5 1/2 X 15	18'-3 1/2"		11'-8 1/8"	10'-3 1/8"
B46	1	1	(5) 46				
B47	1	1	(3) 5 1/2 X 18	10'-11"		11'-8 1/8"	10'-3 1/8"
B48	1	1	(3) 5 1/2 X 18	10'-3 1/2"		11'-8 1/8"	10'-3 1/8"
B49	1	1	(3) 5 1/2 X 18	4'-1 3/8"		11'-3 5/8"	10'-3 5/8"
B50	1	1	(5) 50				
B51	1	1	(3) 5 1/2 X 18	6'-4 1/8"		11'-9"	10'-9"
B52	1	1	(3) 5 1/2 X 18	1/4"		11'-1 1/8"	10'-4 1/8"
B53	1	1	(5) 53				
B54	1	1	(5) 54				
B55	1	1	(5) 55				

SHEET INDEX	
PAGE	TITLE
A1	COVER SHEET
A2	SITE PLAN
A3	LANDSCAPE PLAN - OVERVIEW
A4	LANDSCAPE PLAN - ENLARGED
A5	IRRIGATION PLAN
A6	FLOOR PLAN - 1ST LEVEL
A7	FLOOR PLAN - BASEMENT
A8	FOUNDATION
A9	DETAIL VIEWS
A10	FABRICATED COLUMN CAPS
A11	STEEL BEAM DETAILS
A12	STEEL BEAM DETAILS
A13	STEEL BEAM DETAILS
A14	WALL BRACING - 1ST LEVEL
A15	WALL BRACING - BASEMENT
A16	FLOOR LAYOUT - 1ST LEVEL
A17	ROOF LAYOUT - BASEMENT
A18	ROOF LAYOUT - 1ST LEVEL
A19	ROOF LAYOUT - OVERVIEW
A20	ELEVATIONS
A21	ELEVATIONS
A22	SECTION VIEWS
A23	SECTION VIEWS
A24	SECTION VIEWS
A25	SECTION VIEWS
A26	SECTION VIEWS
A27	SECTION VIEWS
E1	ELECTRICAL - 1ST LEVEL
E2	ELECTRICAL - BASEMENT

PRELIMINARY
NOT FOR CONSTRUCTION

SCAN FOR CURRENT PLAN

SCAN FOR ENGINEERED CALCS

SCAN FOR 3D FRAMING MODEL

LICENSED ARCHITECT
AR-985249
06.19.2026
JESSICA PETTY
STATE OF IDAHO

ENGINEER STAMP AREA

PROJECT NO.
25-017

CONTRACTOR TO VERIFY ALL DETAILS, DIMENSIONS, AND SPECIFICATIONS PRIOR TO CONSTRUCTION AND REPORT ANY DISCREPANCIES TO SMC DESIGN. SMC DESIGN IS NOT RESPONSIBLE FOR CONSTRUCTION OR ANYTIME THEREAFTER. CONSULTANTS AND VENDORS ARE TO BE HELD HARMLESS FROM ANY CLAIMS, LITIGATIONS OR SUITS THAT MAY ARISE DURING CONSTRUCTION.

LEGACY RANCH LOT #13
ADAMS CO., ID

SHEET SIZE
ARCH E2 (36" x 54")

INITIAL DATE: 11/19/2025
PRINT DATE: 11/17/2026

DRAWN BY:
Steve

SECTION VIEWS

SMC Design
208.249.1288
Nampa, ID

SHEET NUMBER
A26
PAGE 26

PRELIMINARY
NOT FOR CONSTRUCTION

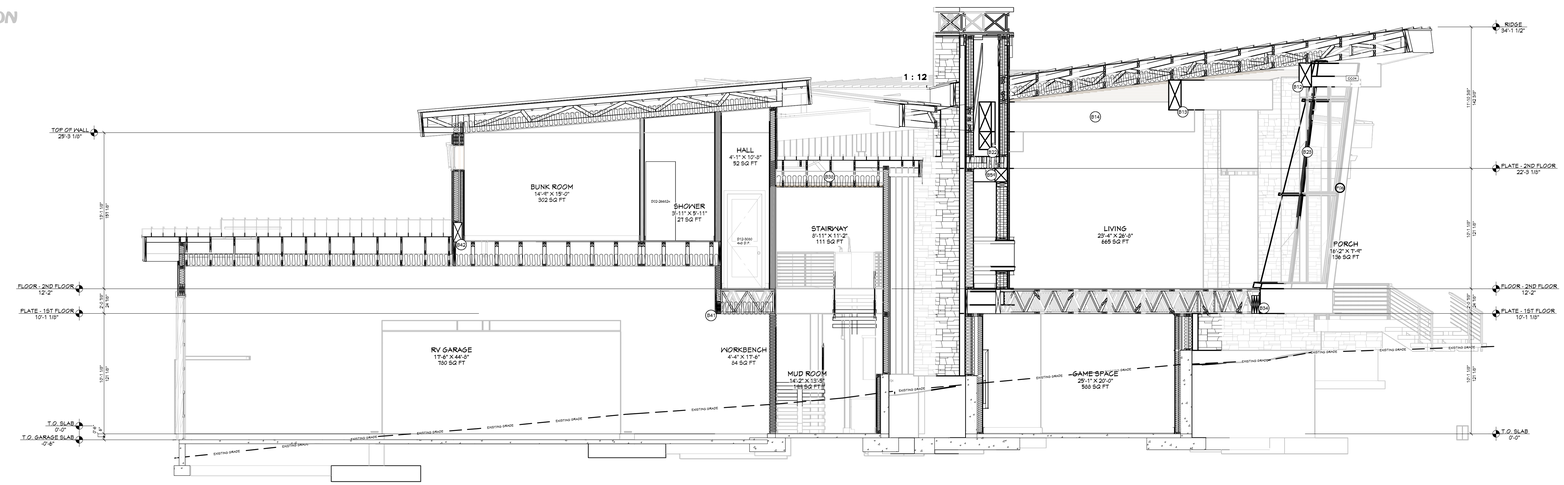

U VIEW U - U
1/4 IN = 1 FT

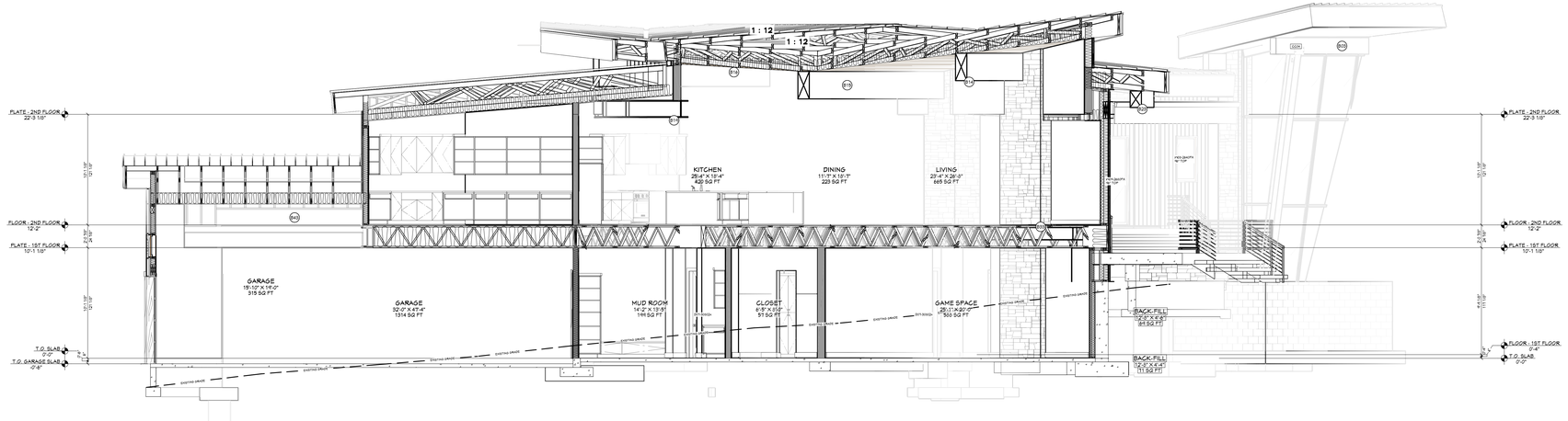

V VIEW V - V
1/4 IN = 1 FT

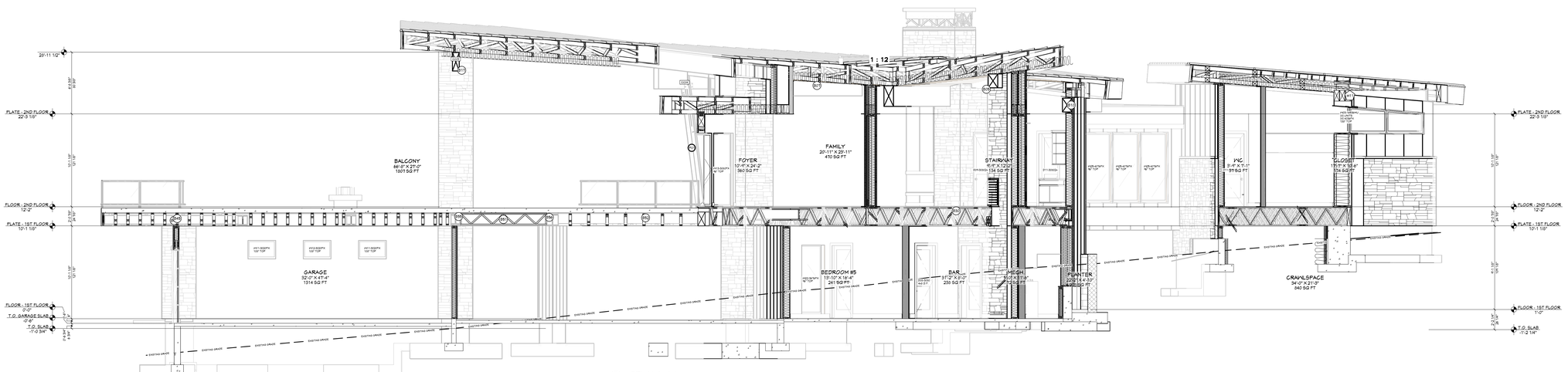

W VIEW W - W
1/4 IN = 1 FT

POST SCHEDULE			
NO	QTY	FLR	TYPE
P01	1	2	3X5 D.F #2
P02	2	1	6X10
P03	2	1	6X12 D.F #2
P04	1	2	6 1/2 X 6 1/2
P05	1	2	10X10
P06	2	2	10X12 D.F #2
P07	1	2	POST - BM 2-1
P08	1	2	POST - BM 2-2
P09	2	1	POST - BM 11-3
P10	1	1	POST - BM 11-5
P11	1	1	POST - BM 11-6
P12	1	2	POST - BM 20-1
P13	1	2	POST - BM 20-2
P14	1	1	POST - BM 21-1
P15	1	1	POST - BM 21-2
P16	1	1	POST - BM 50-1
P17	1	1	POST - BM 50-3
P18	1	1	POST - BM 51-1
P19	1	1	POST - BM 51-2
P20	1	1	POST - BM 50-2
P21	1	1	POST - BM 58-1
P22	1	1	POST - BM 58-2
P23	1	1	POST - BM 58-3
P24	1	1	POST - BM 58-4
P25	1	1	POST - BM 58-5
P26	1	1	POST - BM 58-6
P27	1	1	POST - BM 59-1
P28	1	1	POST - BM 59-2
P29	1	1	POST - BM 59-3
P30	1	1	POST - BM 59-4
P31	1	1	POST - BM 59-5
P32	1	1	POST - BM 59-6
P33	1	1	POST - BM 59-7
P34	1	1	POST - BM 59-8

HEADER SCHEDULE	
NO	TYPE
HD1	(1) 4X2 D.F
HD2	(1)7 1/2 X 13 1/2 GLM
HD3	(1)5 1/2 X 14 1/2 GLM
HD4	(1) 4X10 D.F
HD5	(1) 4X12 D.F
HD6	(4)2X12 D.F
HD7	(3) 1 3/4 X 9 1/2 LVL
HD8	(3) 1 3/4 X 11 7/8 LVL
HD9	(3) 1 3/4 X 11 7/8 LVL
HD10	(3) 1 3/4 X 14 LVL
HD11	(3) 1 3/4 X 14 LVL
HD12	(3) 1 3/4 X 14 LVL

BEAM SCHEDULE				ISEE STEEL NAILER DETAIL FOR STEEL BEAMS WHERE APPLICABLE!				
NO	FLR	PLATE	NOTES		O.H. UP +/-	MIN. BRG	TOP OF BEAM	T.O. BEAM	CALC #
B01	2	3	(8-07) 1 3/4 X 11 7/8	- ABOVE TOP FLT	8'-11"		22'-3"	21'-3 1/8"	1
B02	2	1	(8-01) 5 1/4 X 13 7/8 P1-2450 ARSI-50		15'-4"		22'-3"	20'-5 3/8"	2
B03	2	1	(8-03) 3 3/4 X 13		15'-4"		24'-3 5/8"	23'-5 7/8"	3
B04	2	1	(8-04) 3 3/4 X 16		13'-4"		27'-4 5/8"	26'-8 5/8"	4
B05	2	1	(8-05) 3 3/4 X 18		11'-4"		29'-1 1/8"	28'-1 1/8"	5
B06	2	1	(8-06) 5 1/4 X 21		30'-4"		28'-3 1/8"	29'-3 1/8"	6
B07	2	1	(8-07) 5 1/4 X 21		30'-1 3/8"		28'-5 5/8"	24'-3 5/8"	7
B08	2	1	(8-03) 5 1/4 X 21		30'-1 3/8"		21'-3 5/8"	24'-11 5/8"	8
B09	2	1	(8-03) 3 3/4 X 18		17'-4"		27'-4 5/8"	26'-8 5/8"	9
B10	1	1	(8-11) 7 1/4 X 16		3'-1 1/2"		29'-1 1/8"	28'-1 1/8"	10
B11	1	1	(8-11) 7 1/4 X 16				31'-3 1/8"	29'-7 7/8"	11
B12	2	1	(8-12) 5 3/4 X 24		29'-6"		31'-1 1/8"	29'-1 1/8"	12
B13	2	1	(8-13) 5 3/4 X 30		24'-6 1/4"		24'-0"	29'-4"	13
B14	2	1	(8-13) 5 3/4 X 30		27'-10 3/4"		21'-10"	29'-4"	14
B15	2	1	(8-15) 5 3/4 X 30		29'-6"		26'-2"	29'-4"	15
B16	2	1	(8-15) 5 3/4 X 11 1/2		28'-6"		24'-6"	25'-10 1/8"	16
B17	2	1	(8-17) 5 1/4 X 24		30'-10 5/8"		26'-10 1/8"	29'-10 1/8"	17
B18	2	1	(8-17) 5 1/4 X 21		17'-1 5/8"		29'-1 1/8"	28'-1 1/8"	18
B19	1	1	(8-19)				29'-1 1/8"	28'-1 1/8"	19
B20	1	1	(8-20)				10'-1 1/8"	9'-4 1/8"	20
B21	2	1	(8-21) 5 3/4 X 18		1'-9"		24'-4 5/8"	22'-10 5/8"	21
B22	2	1	(8-22) 5 3/4 X 16		6'-4"		29'-4 1/8"	29'-10 1/8"	22
B23	2	1	(8-23) 5 3/4 X 18		1'-3 3/8"		29'-4 1/8"	29'-10 5/8"	23
B24	2	1	(8-24) 5 3/4 X 18		9'-3"		29'-4 1/8"	29'-10 1/8"	24
B25	1	1	(8-25) 3 3/4 X 16		11'-1 1/4"		31'-1 1/8"	29'-1 1/8"	25
B26	1	1	(8-26) 3 3/4 X 18		21'-5 7/8"		12'-3 1/8"	10'-1 1/8"	26
B27	1	1	(8-27) 5 1/4 X 20 3/16 P310 X 60 ARS2-50		21'-5 7/8"		12'-3 1/8"	10'-1 1/8"	27
B28	1	1	(8-28) 3 3/4 X 16		15'-6"		31'-1 1/8"	29'-1 1/8"	28
B29	1	3	(8-29) 1 3/4 X 14		14'-11 5/8"		12'-1 1/8"	10'-11 1/8"	29
B30	1	1	(8-30)				10'-1 1/8"	9'-11 1/8"	30
B31	1	1	(8-31)				6'-2 1/8"	5'-6 3/8"	31
B32	1	1	(8-32) 6 3/4 X 18		12'-10 3/4"		11'-1 1/8"	10'-1 1/8"	32
B33	1	1	(8-33)						33
B34	1	3	(8-34) 1 3/4 X 18		22'-2 7/8"		11'-1 1/8"	10'-1 1/8"	34
B35	1	1	(8-35)						35
B36	1	1	(8-36)						36
B37	1	2	(8-37) 1 3/4 X 11 7/8		6'-3 3/4"		11'-1"	10'-1 1/8"	37
B38	2	3	(8-38) 1 3/4 X 11 7/8		6'-11 1/2"		22'-2 3/4"	21'-2 1/8"	38
B39	1	1	(8-39) 5 1/2 X 30		2'-0"		18'-10 1/8"	14'-1 1/8"	39
B40	1	1	(8-40) 4X6		4'-9 1/8"		17'-3 5/8"	10'-1 1/8"	40
B41	1	1	(8-41) 1 3/4 X 11 7/8		19'-0 3/4"		11'-1"	10'-1 1/8"	41
B42	1	1	(8-42) 1 3/4 X 16 1/2		14'		11'-3 5/8"	10'-1 1/8"	42
B43	1	1	(8-43) 1 3/4 X 16		14'-3 1/4"		11'-1 1/8"	10'-1 1/8"	43
B44	1	1	(8-44)						44
B45	1	1	(8-45) 5 1/8 X 18		19'-3 1/2"		11'-6 1/8"	10'-3 1/8"	45
B46	1	1	(8-46)						46
B47	1	1	(8-47) 3 1/2 X 15				10'-11"	11'-6 1/8"	10'-3 1/8"	47
B48	1	1	(8-48) 3 1/2 X 15				10'-3 1/2"	11'-6 1/8"	10'-3 1/8"	48
B49	1	1	(8-49) 5 1/8 X 15				4'-1 5/8"	11'-5 3/4"	10'-2 3/4"	49
B50	1	1	(8-50)							50
B51	1	1	(8-51) 5 1/8 X 15				6'-4 1/2"	11'-9"	10'-4"	51
B52	1	1	(8-52) 5 3/4 X 15				19'	11'-1 1/8"	10'-4 1/8"	52
B53	1	1	(8-53)							53
B54	1	1	(8-54)							54
B55	1	1	(8-55)							55

SHEET INDEX	
PAGE	TITLE
A1	COVER SHEET
A2	SITE PLAN
A3	LANDSCAPE PLAN - OVERVIEW
A4	LANDSCAPE PLAN - ENLARGED
A5	IRRIGATION PLAN
A6	FLOOR PLAN - 1ST LEVEL
A7	FLOOR PLAN - BASEMENT
A8	FOUNDATION
A9	DETAIL VIEWS
A10	FABRICATED COLUMN CAPS
A11	STEEL BEAM DETAILS
A12	STEEL BEAM DETAILS
A13	STEEL BEAM DETAILS
A14	WALL BRACING - 1ST LEVEL
A15	WALL BRACING - BASEMENT
A16	FLOOR LAYOUT - 1ST LEVEL
A17	ROOF LAYOUT - BASEMENT
A18	ROOF LAYOUT - 1ST LEVEL
A19	ROOF LAYOUT - OVERVIEW
A20	ELEVATIONS
A21	ELEVATIONS
A22	SECTION VIEWS
A23	SECTION VIEWS
A24	SECTION VIEWS
A25	SECTION VIEWS
A26	SECTION VIEWS
A27	SECTION VIEWS
E1	ELECTRICAL - 1ST LEVEL
E2	ELECTRICAL - BASEMENT

NOT FOR CONSTRUCTION

SCAN FOR CURRENT PLAN

SCAN FOR ENGINEERED CALCS

SCAN FOR 3D FRAMING MODEL

LICENSED ARCHITECT AR-985249
06.19.2026
JESSICA PETTY
STATE OF IDAHO

ENGINEER STAMP AREA

PROJECT NO. 25-017

LEGACY RANCH LOT #13
ADAMS CO., ID

CONTRACTOR TO VERIFY ALL DETAILS, DIMENSIONS, AND DESCRIPTIONS PRIOR TO CONSTRUCTION AND REPORT ANY CONFLICTS AND ERRORS TO SMC DESIGN. SMC DESIGN SHALL BE HELD HARMLESS FROM ANY CLAIMS, LITIGATIONS OR SUITS THAT MAY ARISE DURING CONSTRUCTION OR ANYTIME THEREAFTER.

SHEET SIZE: ARCH E2 (36" x 54")
INITIAL DATE: 11/19/2025
PRINT DATE: 11/17/2026
DRAWN BY: Steve

SECTION VIEWS

SMC Design
208.249.7288
Nampa, ID

SHEET NUMBER
A27
PAGE 21

PRELIMINARY
NOT FOR CONSTRUCTION

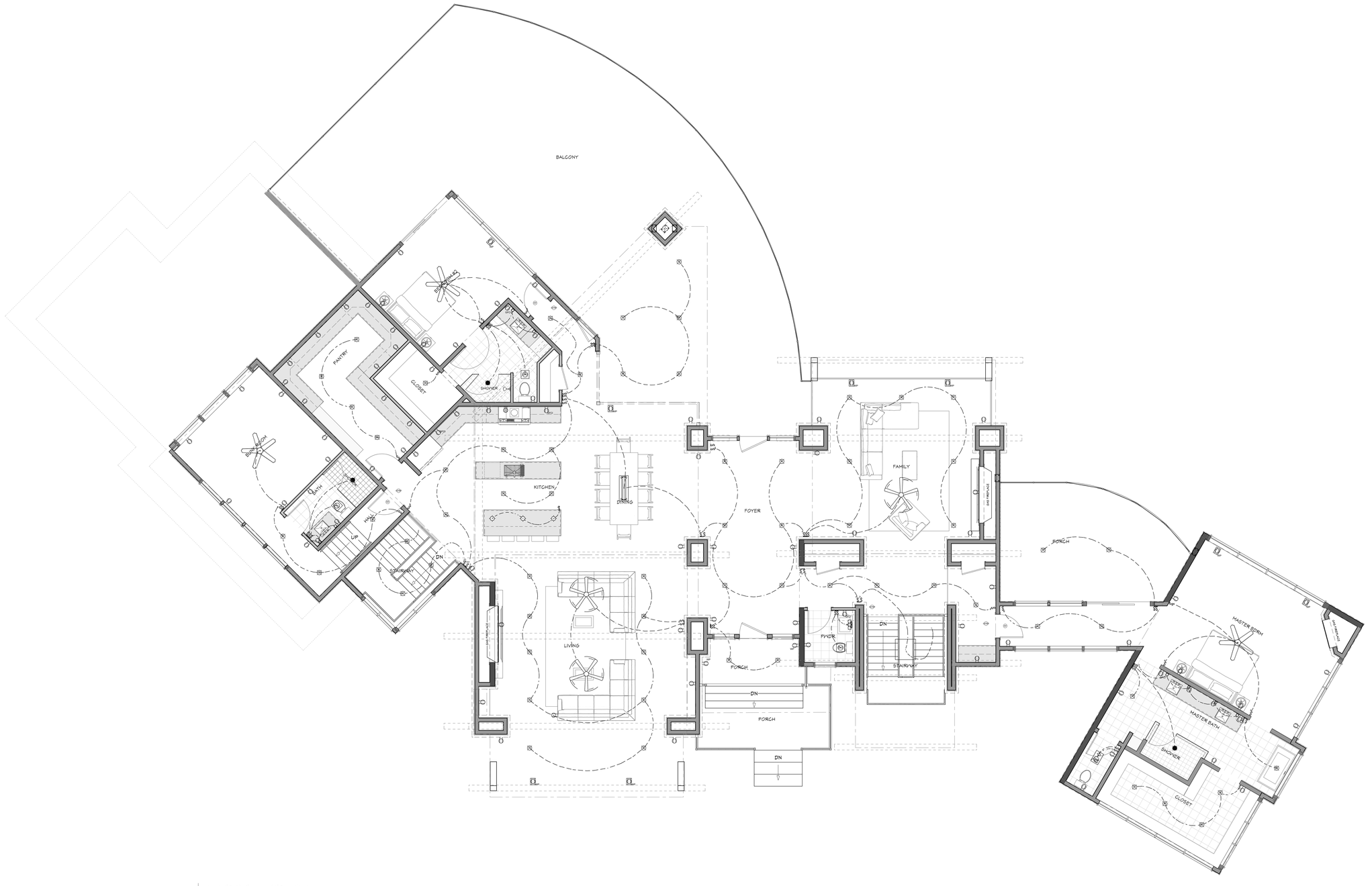

ELECTRICAL - 1ST LEVEL
1/4 IN = 1 FT

2015 INTERNATIONAL ENERGY CONSERVATION CODE (IECC)

THE PROPOSED BUILDING HAS BEEN DESIGNED TO MEET OR EXCEED THE REQUIREMENTS OF THE 15 INTERNATIONAL ENERGY CONSERVATION CODE

THERMAL ENVELOPE (TABLE C)

INSULATION AND FENESTRATION REQUIREMENTS BY COMPONENT

CLIMATE ZONE	WINDOWS U-FACTOR	CEILING R-VALUE	WOOD WALL R-VALUE	FLOOR R-VALUE	SLAB R-VALUE	CRAWL SPACE WALL R-VALUE
6	.30	49	20 OR 13+5	30	10, 4FT	19/15

EXTERIOR LIGHTING NOTES:

All exterior lighting shall use full cutoff luminaires with the light source downcast and fully shielded, with the following exceptions:

(A) Luminaires With Maximum Output Of One Thousand Lumens: Luminaires that have a maximum output of one thousand (1,000) lumens per fixture, regardless of number of lamps (equal to one 60-watt incandescent light), the bulb is not visible, and the luminaire has an opaque top or is under an opaque structure. (See section 3.14.05, figure 3 of this chapter.)

(B) Floodlights: Floodlights with external shielding shall be angled, provided, that no light is directed above a twenty-five degree (25°) angle measured from the vertical line from the center of the light extended to the ground, and only if the luminaire does not cause glare or light to shine on adjacent property or public rights of way (see section 3.14.05, figure 6 of this chapter). Photocells with timers that allow a floodlight to go on at dusk and off by eleven o'clock (11:00) P.M. are encouraged.

(C) Residential Holiday Lighting: Residential holiday lighting from November 1 to February 1. Flashing holiday lights on residential properties are discouraged. Holiday lights are encouraged to be turned off by eleven o'clock (11:00) P.M.

(D) Commercial Holiday Lighting: Commercial holiday lighting from November 1 to March 15. Holiday lights are encouraged to be controlled by timers.

(E) Sensor Activated Luminaires: Sensor activated luminaires shall be permitted, provided:

1. It is located in such a manner as to prevent glare and lighting onto properties of others or into a public right of way,

2. The luminaire is set to only go on when activated and to go off within five (5) minutes after activation has ceased,

3. The luminaire shall not be triggered by activity off the property,

4. Full cutoff luminaires are used with the light source downcast and fully shielded.

(F) Emergency Lighting: Vehicular lights and all temporary emergency lighting needed by the fire and police departments, or other emergency services.

(G) Uplighting For Flags: Uplighting for flags, provided the flag is of a government and the maximum lumen output is one thousand three hundred (1,300) lumens. Flags are encouraged to be taken down at sunset to avoid the need for lighting.

(H) Lighting Of Communication Towers: Lighting of radio, communication and navigation towers, provided that the owner or occupant demonstrates that the federal aviation administration (FAA) regulations can only be met through the use of lighting that does not comply with this chapter.

(I) Airport Lighting: Lighting at the McCall Municipal Airport, provided the owner or occupant demonstrates that the federal aviation administration (FAA) regulations can only be met through the use of lighting that does not comply with this chapter.

(J) Neon Lights: Neon lights permitted pursuant to chapter 6, "Signs", of this title.

(K) Luminaires Used For Playing Fields: Luminaires used for playing fields shall be exempt from the height restriction, provided all other provisions of this chapter are met and the light is used only while the field is in use. (Ord. 1140, 2-11-2016)

PLACEMENT AND HEIGHT:

Private Property: Freestanding luminaires on private property in residential zones shall be mounted at a height equal to or less than the sum of H = (D/3)+3, where D is the distance in feet to the nearest property boundary, but shall not be higher than fifteen feet (15') from ground level to the top of the luminaire, whichever is less.

Example:

Pole Height	Distance To Property Line
15 feet	36 feet (36/3 = 12+3=15)
12 feet	21 feet (21/3 = 7+3=12)
9 feet	10 feet (10/3 = 3+3=9)

All exterior lighting shall not cause light trespass and shall protect adjacent properties from glare and excessive lighting.

ELECTRICAL SCHEDULE

NUMBER	QTY	SYMBOL	FLOOR	DESCRIPTION
E01	1		1	220V
E02	1		2	220V
E03	1		1	BRYANT SCONCE 3
E04	1		2	BRYANT SCONCE 3
E05	3		2	CEILING FAN W/LIGHT
E06	2		1	CEILING FAN W/LIGHT
E07	4		2	CO/SMOKE DETECTOR
E08	1		1	CO/SMOKE DETECTOR
E09	6		2	DECORATOR GFCI OUTLET
E10	3		1	DECORATOR GFCI OUTLET
E11	75		2	DECORATOR OUTLET
E12	77		1	DECORATOR OUTLET
E13	27		2	DECORATOR SWITCH
E14	23		1	DECORATOR SWITCH
E15	14		2	DECORATOR SWITCH 3-WAY
E16	6		1	DECORATOR SWITCH 3-WAY
E17	10		2	DECORATOR SWITCH 4-WAY
E18	9		1	DECORATOR SWITCH 4-WAY
E19	10		2	DUPLEX (WEATHERPROOF)
E20	4		1	DUPLEX (WEATHERPROOF)
E21	4		2	ENGINEER'S TABLE LAMP
E22	4		1	ENGINEER'S TABLE LAMP
E23	3		2	EXHAUST
E24	4		1	EXHAUST
E25	1		2	EXHAUST (LIGHT)
E26	2		1	FLUSH MOUNT CEILING LIGHT
E27	3		2	GLASS JAR PENDANT G1
E28	8		1	PORCH LIGHT
E29	3		2	PROPEL 5 CEILING FAN
E30	64		2	RECESSED DOWN LIGHT 6
E31	25		1	RECESSED DOWN LIGHT 6
E32	3		2	RECESSED VAPOR LIGHT
E33	2		1	RECESSED VAPOR LIGHT
E34	2		1	SMOKE DETECTOR 1
E35	3		2	SMOKE DETECTOR 1
E36	16			SURFACE MOUNTED TUBE LIGHT - MEDIUM 4 WIDE
E37	8		2	VC COVET SCONCE
E38	4		1	VC COVET SCONCE
E39	1		2	WHITE CANDLE 2 STORY

SCAN FOR CURRENT PLAN

LICENSED ARCHITECT
AR-985249
06.19.2026
JESSICA PETTY
STATE OF IDAHO

PROJECT NO.
25-017

LEGACY RANCH LOT #13
ADAMS CO., ID

CONTRACTOR TO VERIFY ALL DETAILS, DIMENSIONS, AND SPECIFICATIONS PRIOR TO CONSTRUCTION AND REPORT ANY DISCREPANCIES OR OMISSIONS TO THE ARCHITECT. THE ARCHITECT IS NOT RESPONSIBLE FOR CONSTRUCTION MEANS, METHODS, TECHNIQUES, SEQUENCES, OR PROCEDURES, OR FOR SAFETY PRECAUTIONS AND PROGRAMS IN CONNECTION WITH THE WORK. THE ARCHITECT SHALL NOT BE RESPONSIBLE FOR ANY CONTRACTOR'S FAILURE TO CARRY OUT THE WORK IN ACCORDANCE WITH THE CONTRACT DOCUMENTS. THE ARCHITECT SHALL NOT BE RESPONSIBLE FOR THE ACTS OR OMISSIONS OF THE CONTRACTOR, SUBCONTRACTORS, OR ANY OF THEIR AGENTS OR EMPLOYEES, OR ANY OTHER PERSONS PERFORMING PORTIONS OF THE WORK. THE CONTRACTOR SHALL INDEMNIFY AND HOLD HARMLESS THE ARCHITECT AND ITS CONSULTANTS FROM ANY CLAIMS, LITIGATIONS OR SUITS THAT MAY ARISE DURING CONSTRUCTION OR ANYTIME THEREAFTER.

SHEET SIZE
ARCH E2 (36" x 54")

INITIAL DATE: 11/19/2025
PRINT DATE: 11/17/2026

DRAWN BY:
Steve

ELECTRICAL - 1ST LEVEL

SMC Design
208.249.1286
Nampa, ID

SHEET NUMBER
E1
PAGE 28

PRELIMINARY
NOT FOR CONSTRUCTION

PRELIMINARY
NOT FOR CONSTRUCTION

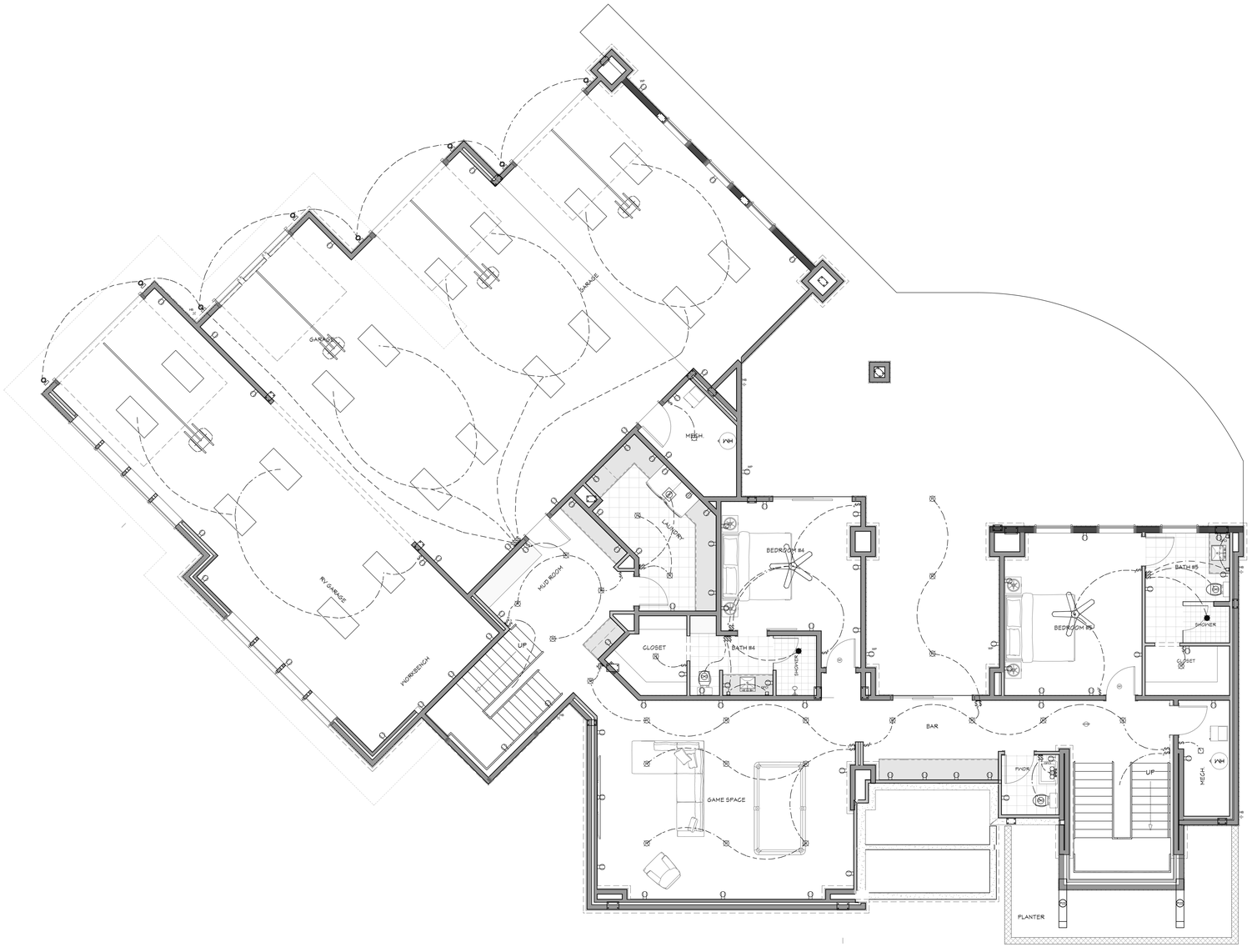

ELECTRICAL - BASEMENT
1/4 IN = 1 FT

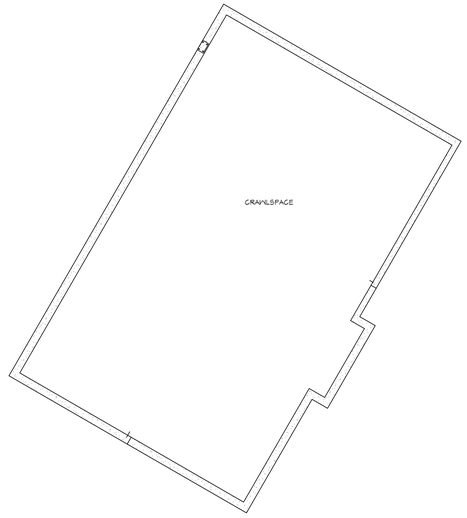

2018 INTERNATIONAL ENERGY CONSERVATION CODE (IECC)

THE PROPOSED BUILDING HAS BEEN DESIGNED TO MEET OR EXCEED THE REQUIREMENTS OF THE 2018 INTERNATIONAL ENERGY CONSERVATION CODE

THERMAL ENVELOPE PACKAGE (CHOOSE ONE)

INSULATION AND FENESTRATION REQUIREMENTS BY COMPONENT

CLIMATE ZONE	WINDOWS U-FACTOR	CEILING R-VALUE	WOOD WALL R-VALUE	FLOOR R-VALUE	SLAB R-VALUE	CRAWL SPACE WALL R-VALUE
6	.30	49	20 OR 13+5	30	10, 4FT	19/15

EXTERIOR LIGHTING NOTES:

All exterior lighting shall use full cutoff luminaires with the light source downcast and fully shielded, with the following exceptions:

(A) Luminaires With Maximum Output Of One Thousand Lumens: Luminaires that have a maximum output of one thousand (1,000) lumens per fixture, regardless of number of lamps (equal to one 60-watt incandescent light), the bulb is not visible, and the luminaire has an opaque top or is under an opaque structure. (See section 3.14.05, figure 3 of this chapter.)

(B) Floodlights: Floodlights with external shielding shall be angled, provided, that no light is directed above a twenty-five degree (25°) angle measured from the vertical line from the center of the light extended to the ground, and only if the luminaire does not cause glare or light to shine on adjacent property or public rights of way (see section 3.14.05, figure 6 of this chapter). Photocells with timers that allow a floodlight to go on at dusk and off by eleven o'clock (11:00) P.M. are encouraged.

(C) Residential Holiday Lighting: Residential holiday lighting from November 1 to February 1. Flashing holiday lights on residential properties are discouraged. Holiday lights are encouraged to be turned off by eleven o'clock (11:00) P.M.

(D) Commercial Holiday Lighting: Commercial holiday lighting from November 1 to March 15. Holiday lights are encouraged to be controlled by timers.

(E) Sensor Activated Luminaires: Sensor activated luminaires shall be permitted, provided:

1. It is located in such a manner as to prevent glare and lighting onto properties of others or into a public right of way,

2. The luminaire is set to only go on when activated and to go off within five (5) minutes after activation has ceased,

3. The luminaire shall not be triggered by activity off the property,

4. Full cutoff luminaires are used with the light source downcast and fully shielded.

(F) Emergency Lighting: Vehicular lights and all temporary emergency lighting needed by the fire and police departments, or other emergency services.

(G) Uplighting For Flags: Uplighting for flags, provided the flag is of a government and the maximum lumen output is one thousand three hundred (1,300) lumens. Flags are encouraged to be taken down at sunset to avoid the need for lighting.

(H) Lighting Of Communication Towers: Lighting of radio, communication and navigation towers, provided that the owner or occupant demonstrates that the federal aviation administration (FAA) regulations can only be met through the use of lighting that does not comply with this chapter.

(I) Airport Lighting: Lighting at the McCall Municipal Airport, provided the owner or occupant demonstrates that the federal aviation administration (FAA) regulations can only be met through the use of lighting that does not comply with this chapter.

(J) Neon Lights: Neon lights permitted pursuant to chapter 6, "Signs", of this title.

(K) Luminaires Used For Playing Fields: Luminaires used for playing fields shall be exempt from the height restriction, provided all other provisions of this chapter are met and the light is used only while the field is in use. (Ord. 940, 2-11-2016)

PLACEMENT AND HEIGHT:

Private Property: Freestanding luminaires on private property in residential zones shall be mounted at a height equal to or less than the sum of H = (D/3)+3, where D is the distance in feet to the nearest property boundary, but shall not be higher than fifteen feet (15') from ground level to the top of the luminaire, whichever is less.

Example:

Pole Height	Distance To Property Line
15 feet	36 feet (36/3 = 12+3=15)
12 feet	21 feet (21/3 = 9+3=12)
9 feet	10 feet (10/3 = 3+3=9)

All exterior lighting shall not cause light trespass and shall protect adjacent properties from glare and excessive lighting.

ELECTRICAL SCHEDULE

NUMBER	QTY	SYMBOL	FLOOR	DESCRIPTION
E01	1		1	220V
E02	1		2	220V
E03	1		1	BRYANT SCONCE 3
E04	1		2	BRYANT SCONCE 3
E05	3		2	CEILING FAN W/LIGHT
E06	2		1	CEILING FAN W/LIGHT
E07	4		2	CO/SMOKE DETECTOR
E08	1		1	CO/SMOKE DETECTOR
E09	6		2	DECORATOR GFCI OUTLET
E10	3		1	DECORATOR GFCI OUTLET
E11	75		2	DECORATOR OUTLET
E12	77		1	DECORATOR OUTLET
E13	27		2	DECORATOR SWITCH
E14	23		1	DECORATOR SWITCH
E15	14		2	DECORATOR SWITCH 3-WAY
E16	6		1	DECORATOR SWITCH 3-WAY
E17	16		2	DECORATOR SWITCH 4-WAY
E18	9		1	DECORATOR SWITCH 4-WAY
E19	10		2	DUPLEX (WEATHERPROOF)
E20	4		1	DUPLEX (WEATHERPROOF)
E21	4		2	ENGINEER'S TABLE LAMP
E22	4		1	ENGINEER'S TABLE LAMP
E23	3		2	EXHAUST
E24	4		1	EXHAUST
E25	1		2	EXHAUST (LIGHT)
E26	2		1	FLUSH MOUNT CEILING LIGHT
E27	3		2	GLASS JAR PENDANT-01
E28	8		1	PORCH LIGHT
E29	3		2	PROPEL 5 CEILING FAN
E30	64	R	2	RECESSED DOWN LIGHT 6
E31	25	R	1	RECESSED DOWN LIGHT 6
E32	3		2	RECESSED VAPOR LIGHT
E33	2		1	RECESSED VAPOR LIGHT
E34	2	SD	1	SMOKE DETECTOR 1
E35	3	SD	2	SMOKE DETECTOR 1
E36	18		1	SURFACE MOUNTED TUBE LIGHT - MEDIUM 4 WIDE
E37	8		2	VC COVET SCONCE
E38	4		1	VC COVET SCONCE
E39	1		2	WHITE CANDLE 2 STORY

SCAN FOR CURRENT PLAN

LICENSED ARCHITECT
AR-985249
06.19.2026
JESSICA PETTY
STATE OF IDAHO

PROJECT NO.
25-017

LEGACY RANCH LOT #13
ADAMS CO., ID

CONTRACTOR TO VERIFY ALL DETAILS, DIMENSIONS, AND SPECIFICATIONS PRIOR TO CONSTRUCTION AND REPORT ANY DISCREPANCIES TO THE ARCHITECT. ARCHITECT IS NOT RESPONSIBLE FOR ANY CHANGES MADE TO THE DESIGN OR CONSTRUCTION OR ANYTIME THEREAFTER. FROM ANY CLAIMS, LITIGATIONS OR SUITS THAT MAY ARISE DURING CONSTRUCTION OR

SHEET SIZE: ARCH E2 (36" x 54")
INITIAL DATE: 11/14/2025
PRINT DATE: 11/17/2026
DRAWN BY: Steve

ELECTRICAL - BASEMENT

SMC Design
208.249.7288
Nampa, ID

SHEET NUMBER
E2
PAGE 29

PRELIMINARY
NOT FOR CONSTRUCTION