Structural Calculations

26-006 Tamarack Resort Lot 1

DATE	October 25, 2026
COMPANY	SMC Design
DESIGNED BY	Steve Curtis
REVIEWED BY	
PROJECT FILE	26-006 Tamarack Resort Lot 1

CONTENTS ›

Design Criteria

BUILDING CODE
2018 International Residential Code

LOADS
ASCE 7-16

WOOD
2018 NDS, Allowable Stress Design

STEEL
AISC 360-16, ASD

CONCRETE
ACI 318-14

SITE CLASS / RISK CATEGORY
Site Class D - Stiff soil / II

HEADERS
NDS 3.2.1 span (the opening plus half the required bearing each end); trimmers outside the opening, 1 1/2 in each, the loads running over them to the king studs (the strip over each bearing into it); king studs IRC Table R602.7.5, at most 115 mph Exp. B

LOAD COMBINATIONS (ASD)
D, D+L, D+S, D+Lr, D+0.75L+0.75S, D+0.75L+0.75Lr

DEFLECTION
per member (see each sheet). Floor live: the member's limit, never looser than L/360; roof live or snow alone: L/240 (IRC Table R301.7); dead plus live: the member's limit. A cantilever on twice its length.

SOIL BEARING
1,500 psf allowable (as entered on the footings)

CONCRETE / REBAR
f'c = 3,000 psi, Fy = 60 ksi

SELF WEIGHT
included on every member and footing

Summary

	Members	Pass	Fail	Not checked	Loads only
Beams	29	29	0	0	0
Girders	1	0	0	0	1
Headers	38	38	0	0	0
Trusses / Rafters	25	5	0	0	20
Joists	18	18	0	0	0
Columns	2	2	0	0	0
Other Members	1	1	0	0	0
Footings	148	148	0	0	0
Total	**262**	**241**	**0**	**0**	**21**

Load path: 68 of 68 beams, girders and headers trace to a footing or a marked wall.

Connections: 59 hung ends and 14 posts checked -- every hanger, cap and base specified passes.

Fabricated hanger, designed on its own sheet: FAB HANGER BM 20-3.

Reading these calculations

- Each member sheet reads from the top: the verdict at the top right, the loads drawn over the member, Design Results with the location, allowable, percent used, load duration factor and governing combination, then the supports with the load each one hands on, the bracing and every load with where it came from.
- Percent = demand / capacity. A result within 1% of its limit prints with a decimal and in orange so a hair-thin pass reads as one.
- Calculated by the SMC Framework engine to the project's codes (2018 NDS, AISC 360-16, ACI 318-14, loads combined to ASCE 7-16) from the project file, with the load path solved at print time.

Legend color & symbol key — KEY

3D Framing Model opens online — 3D

Plans

A1 Foundation — PLAN
A2 Floor 1st Floor Layout - 1St Level — PLAN
A3 Floor 2nd Floor Layout - 2Nd Level — PLAN
A4 Roof 1st Roof Layout - 1St Level — PLAN
A5 Roof 2nd Roof Layout - 2Nd Level — PLAN

Beams

Beam #1 — PASS
Beam #2 — PASS
Beam #3 — PASS
Beam #4 — PASS
Beam #5 — PASS
Beam #6 — PASS
Beam #7 — PASS
Beam #8 — PASS
Beam #9 — PASS
Beam #10 — PASS
Beam #11 — PASS
Beam #12 — PASS
Beam #13 — PASS
Beam #14 — PASS
Beam #15 — PASS
Beam #16 — PASS
Beam #17 — PASS
Beam #18 — PASS
Beam #19 — PASS
Beam #20 — PASS
Beam #21 — PASS
Beam #22 — PASS
Beam #23 — PASS
Beam #24 — PASS
Beam #25 — PASS
Beam #26 — PASS
Beam #27 — PASS
Beam #28 — PASS
Beam #29 — PASS

Girders

Girder #1 — PASS

Headers

Header #1 — PASS
Header #2 — PASS
Header #3 — PASS
Header #4 — PASS
Header #5 — PASS
Header #6 — PASS
Header #7 — PASS
Header #8 — PASS
Header #9 — PASS
Header #10 — PASS
Header #11 — PASS
Header #12 — PASS
Header #13 — PASS
Header #14 — PASS
Header #15 — PASS
Header #16 — PASS
Header #17 — PASS
Header #18 — PASS
Header #19 — PASS
Header #20 — PASS
Header #21 — PASS
Header #22 — PASS
Header #23 — PASS
Header #24 — PASS
Header #25 — PASS
Header #26 — PASS
Header #27 — PASS
Header #28 — PASS
Header #29 — PASS
Header #30 — PASS
Header #31 — PASS
Header #32 — PASS
Header #33 — PASS
Header #34 — PASS
Header #35 — PASS
Header #36 — PASS
Header #37 — PASS
Header #39 — PASS

Trusses / Rafters

Rafters #1 — PASS
Trusses #1
Rafters #2 — PASS
Trusses #2

Trusses / Rafters (cont.)

Rafters #3	PASS
Trusses #3	
Rafters #4	PASS
Trusses #4	
Rafters #5	PASS
Trusses #5	
Trusses #6	
Trusses #7	
Trusses #8	
Trusses #9	
Trusses #10	
Trusses #11	
Trusses #12	
Trusses #13	
Trusses #14	
Trusses #15	
Trusses #16	
Trusses #17	
Trusses #18	
Trusses #19	
Trusses #20	

Joists

Joist #1	PASS
Joist #2	PASS
Joist #3	PASS
Joist #13	PASS
Joist #14	PASS
Joist #15	PASS
Joist #16	PASS
Deck Joists #1	PASS
Joists #4	PASS
Joists #5	PASS
Joists #6	PASS
Joists #7	PASS
Joists #8	PASS
Joists #9	PASS
Joists #10	PASS
Joists #11	PASS
Joists #12	PASS
Joists #17	PASS

Other Members

Other Members (cont.)

Outlookers	PASS
Column Bm #6-1	PASS
Column Bm #6-2	PASS

Footings

Footing #1	PASS
Footing #2	PASS
Footing #3	PASS
Footing #4	PASS
Footing #5	PASS
Footing #6	PASS
Footing #7	PASS
Footing #8	PASS
Footing #9	PASS
Footing #10	PASS
Footing #11	PASS
Footing #12	PASS
Footing #13	PASS
Footing #14	PASS
Footing #15	PASS
Footing #16	PASS
Footing #17	PASS
Footing #18	PASS
Footing #19	PASS
Footing #20	PASS
Footing #21	PASS
Footing #22	PASS
Footing #23	PASS
Footing #24	PASS
Footing #25	PASS
Footing #26	PASS
Footing #27	PASS
Footing #28	PASS
Footing #29	PASS
Footing #30	PASS
Footing #31	PASS
Footing #32	PASS
Footing #33	PASS
Footing #34	PASS
Footing #35	PASS
Footing #36	PASS
Footing #37	PASS
Footing #38	PASS
Footing #39	PASS

Footings (cont.)

Footing #40	PASS
Footing #41	PASS
Footing #42	PASS
Footing #43	PASS
Footing #44	PASS
Footing #45	PASS
Footing #46	PASS
Footing #47	PASS
Footing #48	PASS
Footing #49	PASS
Footing #50	PASS
Footing #51	PASS
Footing #52	PASS
Footing #53	PASS
Footing #54	PASS
Footing #55	PASS
Footing #56	PASS
Footing #57	PASS
Footing #58	PASS
Footing #59	PASS
Footing #60	PASS
Footing #61	PASS
Footing #62	PASS
Footing #63	PASS
Footing #64	PASS
Footing #65	PASS
Footing #66	PASS
Footing #67	PASS
Footing #68	PASS
Footing #69	PASS
Footing #70	PASS
SpotFtg - FP #1	PASS
SpotFtg Bm #1-1	PASS
SpotFtg Gdr #1-1	PASS
SpotFtg Bm #1-2	PASS
SpotFtg Gdr #1-2	PASS
SpotFtg Bm #1-3	PASS
SpotFtg Bm #1-4	PASS
SpotFtg Bm #2-1	PASS
SpotFtg Bm #2-2	PASS
SpotFtg Bm #3-1	PASS
SpotFtg Bm #3-2	PASS
SpotFtg Bm #4-1	PASS
SpotFtg Bm #4-2	PASS

Footings (cont.)

SpotFtg Bm #5-1	PASS
SpotFtg Bm #5-2	PASS
SpotFtg Bm #5-3	PASS
SpotFtg Bm #5-4	PASS
SpotFtg Bm #6-1	PASS
SpotFtg Hdr #6-1	PASS
SpotFtg Bm #6-2	PASS
SpotFtg Hdr #6-2	PASS
SpotFtg Hdr #7-1	PASS
SpotFtg Hdr #7-2	PASS
SpotFtg Hdr #8-1	PASS
SpotFtg Hdr #8-2	PASS
SpotFtg Bm #9-1	PASS
SpotFtg Hdr #9-1	PASS
SpotFtg Bm #9-2	PASS
SpotFtg Hdr #9-2	PASS
SpotFtg Bm #10-1	PASS
SpotFtg Bm #10-2	PASS
SpotFtg Hdr #10-2	PASS
SpotFtg Hdr #10-3	PASS
SpotFtg Bm #11-1	PASS
SpotFtg Bm #11-2	PASS
SpotFtg Bm #13-1	PASS
SpotFtg Hdr #13-1	PASS
SpotFtg Bm #13-2	PASS
SpotFtg Hdr #13-2	PASS
SpotFtg Bm #15-1	PASS
SpotFtg Bm #15-2	PASS
SpotFtg Hdr #17-2	PASS
SpotFtg Hdr #18-1	PASS
SpotFtg Hdr #18-2	PASS
SpotFtg Hdr #19-1	PASS
SpotFtg Hdr #19-2	PASS
SpotFtg Bm #20-1	PASS
SpotFtg Bm #21-1	PASS
SpotFtg Bm #21-2	PASS
SpotFtg Bm #22-1	PASS
SpotFtg Bm #22-2	PASS
SpotFtg Bm #24-1	PASS
SpotFtg Bm #24-2	PASS
SpotFtg Bm #25-1	PASS
SpotFtg Bm #25-2	PASS
SpotFtg Hdr #25-2	PASS
SpotFtg Bm #26-1	PASS

Footings (cont.)

SpotFtg Hdr #26-1	PASS
SpotFtg Bm #26-2	PASS
SpotFtg Hdr #26-2	PASS
SpotFtg Bm #27-1	PASS
SpotFtg Bm #27-2	PASS
SpotFtg Bm #28-1	PASS
SpotFtg Hdr #28-1	PASS
SpotFtg Bm #28-2	PASS
SpotFtg Hdr #28-2	PASS
SpotFtg Bm #29-1	PASS
SpotFtg Hdr #29-1	PASS
SpotFtg Bm #29-2	PASS
SpotFtg Hdr #29-2	PASS
SpotFtg Hdr #30-1	PASS
SpotFtg Hdr #30-2	PASS
SpotFtg Hdr #31-1	PASS
SpotFtg Hdr #31-2	PASS
SpotFtg Hdr #36-1	PASS
SpotFtg Hdr #36-2	PASS
SpotFtg Hdr #37-1	PASS
SpotFtg Hdr #37-2	PASS

Connections and Simpson sheets

Connections schedule	SHEET
Ledgers each one's fastening, designed	SHEET
Fabricated hangers each one's design sheet	SHEET
Simpson hardware	SHEET
p. 76 ABA/ABU/ABW Adjustable and ·	SIMPSON
p. 93 BC/BCS Post Caps	SIMPSON
p. 99 CCQ·/ECCQ· Column Caps	SIMPSON
p. 114 Face-Mount Hangers · Solid Sawn ·	SIMPSON
p. 126 LRUZ Face-Mount Rafter Hanger	SIMPSON
p. 147 PF/PFB/PFDB Post-Frame ·	SIMPSON
p. 158 Face-Mount Hangers · I-Joists, Glulam ·	SIMPSON
p. 161 Face-Mount Hangers · I-Joists, Glulam ·	SIMPSON
p. 197 Top-Flange Hangers · I-Joists, Glulam ·	SIMPSON
p. 201 Top-Flange Hangers · I-Joists, Glulam ·	SIMPSON
p. 205 Top-Flange Hangers · I-Joists, Glulam ·	SIMPSON
p. 315 HL Heavy Angle and Gusset	SIMPSON

Legend

Color & symbol key for the load path diagrams

Load Path Diagrams

Beam #21
GLB 5.5x15

The member itself. Loads land on its top edge where they land on the member -- a bar is a uniform load over its length. Its reactions leave the bottom edge at the supports (ticks). Click it for its calc sheet.

Trusses #32 · B
2 × D 212 · S 1.9k plf

What bears on the member: which member and reaction, and what it delivers. "2 x" is the same load twice.

Beam #24
(3) LVL 1.75x11.25

Where the load goes next. The dot is that member's own design check: green passes, red fails. Every box is a link.

Column #4
6x6 DF-L #1

A column or post.

SpotFtg Bm #21-1
60"x60"x10" - (6) #4

A footing: the load is in the ground.

A · D 3.1k · S 31k

What a link delivers, by load case: D dead, L floor live, Lr roof live, S snow, W wind. A minus sign is uplift.

out of date

Out of date: the load on the member below no longer matches this reaction.

no load rows

Broken: the link delivers nothing, or points at a member that is gone.

B · bears on wall

Bears on a wall that is not modelled (the engineer's mark).

C · not linked below

Not linked: the load leaves the model here. Verify where it bears.

UP 1,405 lb

Uplift: net uplift at a support under 0.6D + W, and any link whose loads add up to a pull, are boxed in amber.

+ 4 more above

Beam #20

Footing sheets draw what loads the footing. A box stopped short says how many more feed it; click it for the rest.

Status Badges (TOC & sections)

PASS — Every reaction traces to a foundation.

NOT TRACED — At least one reaction unverified — including anywhere DOWN the member's support chain. A footing in this member's chain can't offset its uplift — treat as structural fail.

UPLIFT FAIL — The member fails its own design check (see its calc sheet).

DESIGN FAIL

UPLIFT — Amber tag by a TOC name: uplift condition in this member's chain (own negative reaction or an uplift footing).

Navigation

HOME — Back to the table of contents.

DIAGRAMS — On plan sheets: jump to the flowcharts.

ON PLAN — Jump to this member's pink callout on the drawing, zoomed in.

Beam #31 — On a calc sheet: a diagram page that references this member.

A2 Floor 1st — Small blue pills on diagram titles: the sheets this member is drawn on.

Joists #8 — Pink callouts ON the plan sheets are clickable — straight to that member.

Nearly everything is clickable: TOC rows, member boxes, incoming-load boxes, footings, plan callouts, and the calc sheets cross-link each other.
In most PDF viewers, Alt+Left steps back a view.

Philosophy: nothing is auto-cleared. A member reads PASS only when every reaction, including its whole support chain, lands on a verified foundation.

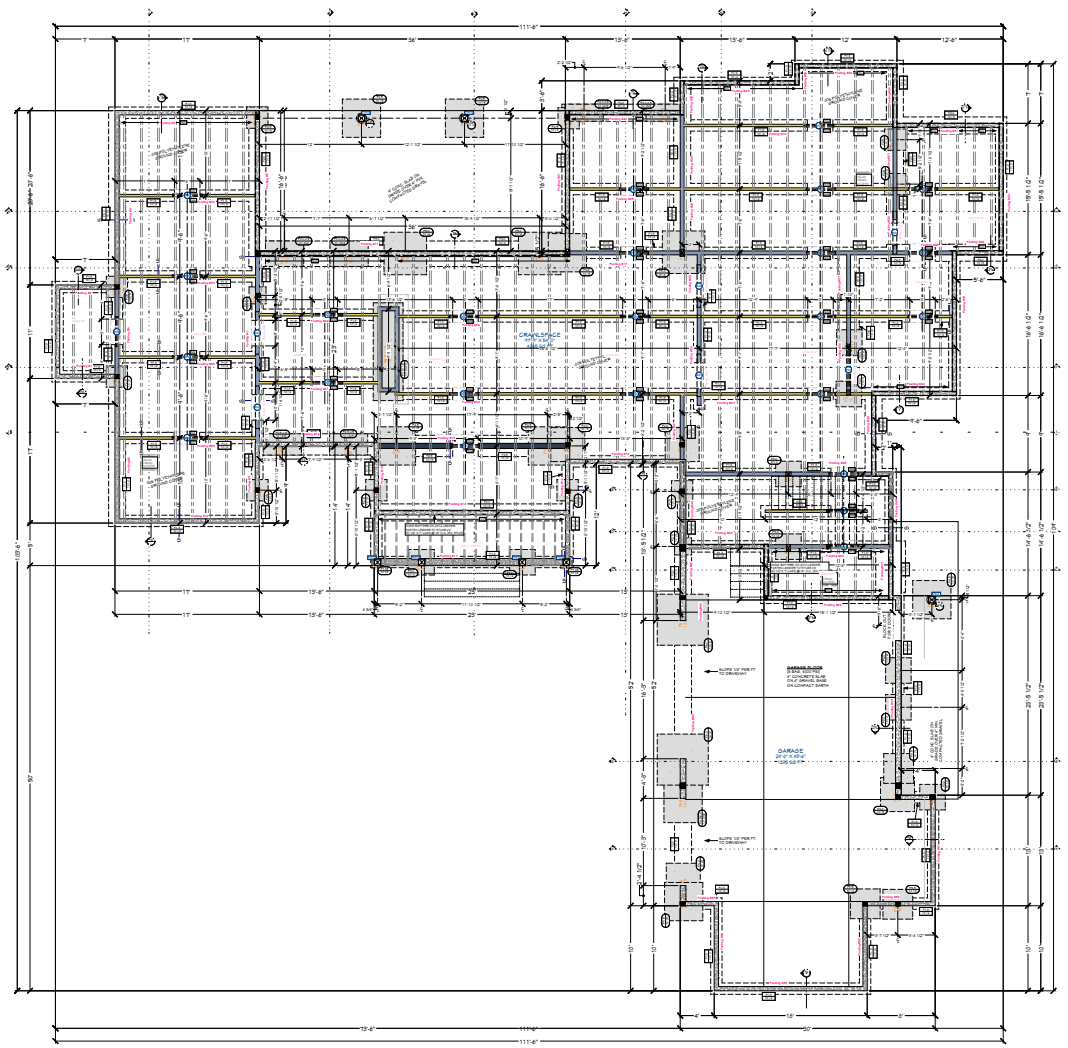

FOUNDATION - WORK
1/4 IN = 1 FT

PAD FOOTING SCHEDULE

CALLOUT	FOOTING SIZE	REINFORCEMENT	QTY
	1'-0" X 1'-0" X 1'-0"	(2) #4 XDEAK.E.W.	2
	2'-4" X 2'-4" X 1'-0"	(3) #4 XDEAK.E.W.	3
	2'-4" X 2'-4" X 1'-0"	(3)(3) #4 XDEAK.GRID	2
	3'-0" X 3'-0" X 1'-0"	(3) #4 XDEAK.E.W.	10
	3'-0" X 3'-4" X 1'-0"	(3)(3) #4 XDEAK.GRID	2
	3'-0" X 3'-6" X 1'-0"	(4) #4 XDEAK.E.W.	9
	3'-6" X 3'-6" X 1'-0"	(4)(4) #4 XDEAK.GRID	2
	4'-0" X 4'-0" X 1'-0"	(4) #4 XDEAK.E.W.	3
	4'-0" X 4'-6" X 1'-0"	(5) #4 XDEAK.E.W.	4
	5'-4" X 5'-4" X 1'-0"	(5) #4 XDEAK.E.W.	7
	5'-4" X 7'-2" X 1'-0"	(5)(6) #4 XDEAK.GRID	1
	6'-0" X 6'-0" X 1'-0"	(6) #4 XDEAK.E.W.	3
	7'-2" X 7'-2" X 1'-0"	(8) #4 XDEAK.E.W.	2
	1'-06" X 4'-0" X 1'-0"	(4)(1.5) #4 XDEAK.GRID	

FOUNDATION CONCRETE (EST.)

FOOTING	79 Cu Yd
STEM WALLS	36 Cu Yd
CONCRETE SLAB	29 Cu Yd
TOTAL CONCRETE	144 Cu Yd

CONTINUOUS FOOTING SCHEDULE (ALL FOOTINGS 16" WIDE)

CALLOUT	FOOTING SIZE	REINFORCEMENT
	16" X 10"	(2) #4 CONT. XDEAK
	24" X 10"	(3) #4 CONT. XDEAK
	30" X 10"	(3) #4 CONT. XDEAK
	36" X 10"	(4) #4 CONT. XDEAK
	42" X 10"	(4) #4 CONT. XDEAK

FOUNDATION NOTES:
ALL ANGLE 45° UNO
ALL INTERIOR DIMENSIONS
ARE TO CENTER OF FOOTING

SHEET INDEX

PAGE	TITLE
A1	FOUNDATION
A2	FLOOR LAYOUT - 1ST LEVEL
A3	FLOOR LAYOUT - 2ND LEVEL
A4	ROOF LAYOUT - 1ST LEVEL
A5	ROOF LAYOUT - 2ND LEVEL

SCAN FOR CORRECT PLAN
SCAN FOR REVISIONS
SCAN FOR ENGINEERED CALCS

PROJECT NO.
-26-006

4 BDRM 5-3/4 BATH
TAMARACK TH 1 LOT 1 VALLEY CO, ID

CONTRACTOR TO VERIFY ALL DETAILS, DIMENSIONS, AND SPECIFICATIONS PRIOR TO CONSTRUCTION AND REPORT ANY CONDITIONS AND/OR ERRORS TO SMC DESIGN. THEY ARE NOT RESPONSIBLE OR LIABLE FOR ANY REJOBS DUE TO FAILURE TO DO SO. DO NOT SCALE DRAWINGS. CONTRACTOR SHALL VERIFY ALL DIMENSIONS ON SITE BEFORE CONSTRUCTION OR ANY FABRICATION. FIGURED DIMENSIONS TAKE PRECEDENCE OVER SCALED DIMENSIONS. ANY DISCREPANCIES SHALL BE REPORTED TO SMC DESIGN BEFORE PROCEEDING WITH WORK. THESE PLANS ARE THE PROPERTY OF SMC DESIGN AND MAY NOT BE REPRODUCED OR USED IN ANY MANNER WITHOUT WRITTEN PERMISSION. ANY UNAUTHORIZED USE OR REPRODUCTION WILL BE PROSECUTED TO THE FULLEST EXTENT OF THE LAW. © COPYRIGHT SMC DESIGN 2025

SHEET SIZE
36" x 48"

INITIAL DATE 06/19/2026
PRINT DATE 10/23/2026

DRAWN BY:
Steve

FOUNDATION

SMC Design
209.241.1255
Nampa, ID

SHEET NUMBER
A1
PAGE 1 OF 5

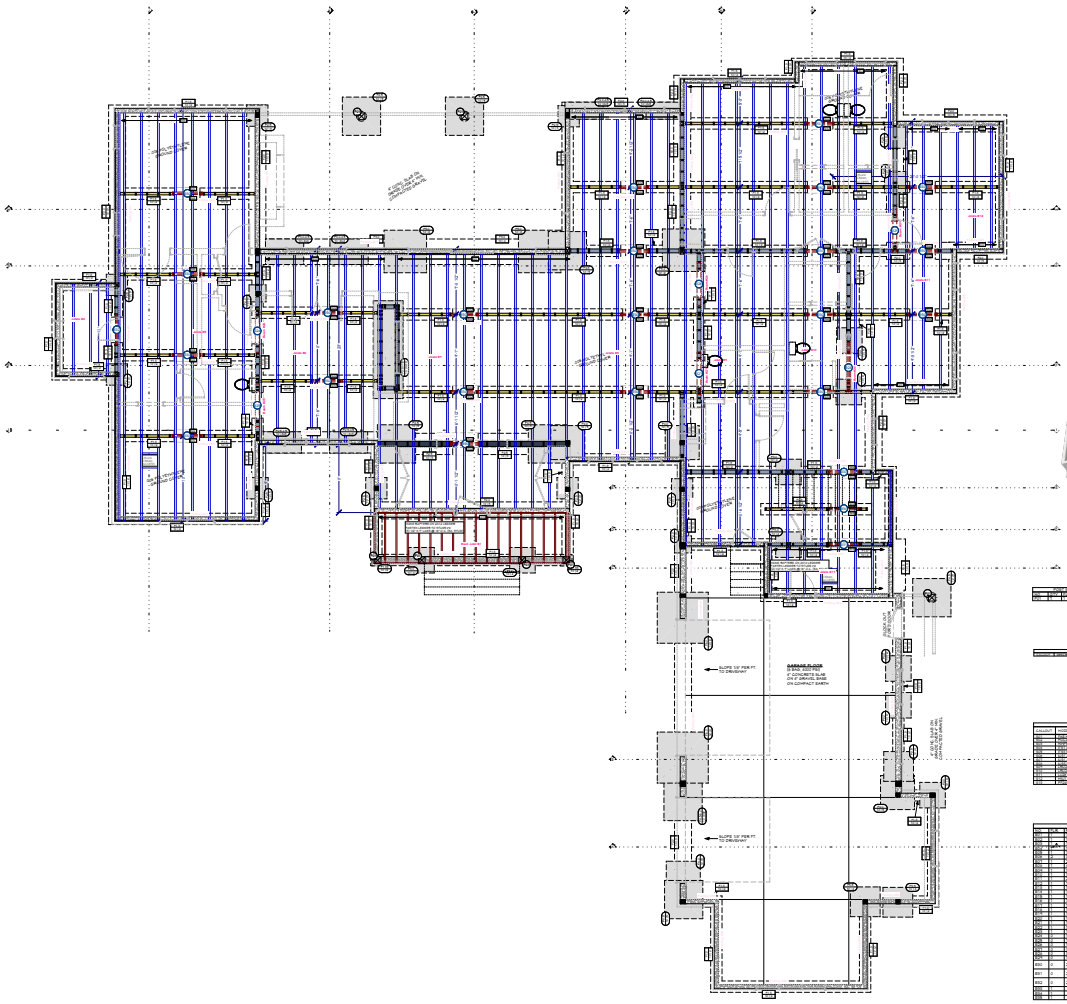

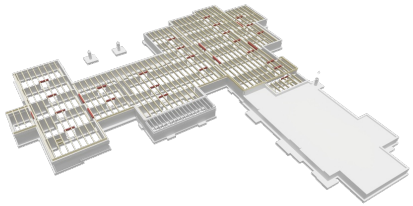

FLOOR FRAMING - 1ST LEVEL - FRONT



FLOOR FRAMING - 1ST LEVEL - REAR



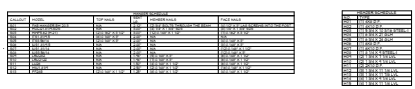

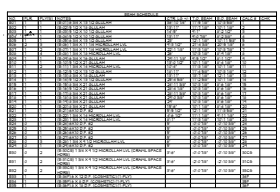

SHEET INDEX

PAGE	TITLE
A1	FOUNDATION
A2	FLOOR LAYOUT - 1ST LEVEL
A3	FLOOR LAYOUT - 2ND LEVEL
A4	ROOF LAYOUT - 1ST LEVEL
A5	ROOF LAYOUT - 2ND LEVEL

FLOOR FRAME SHEET - WORK
1/4 IN = 1 FT

4 BDRM 5 3/4 BATH
TAMARACK FH 1 LOT 1 VALLEY CO ,ID

PROJECT NO.
-26-006

FLOOR LAYOUT - 1ST LEVEL

SHEET SIZE
36" x 48"

INITIAL PLOT: 06/15/2026
LAST PLOT: 10/23/2026

DRAWN BY:
Steve

SMC Design
209.241.1258
Nampa, ID

SHEET NUMBER
A2
PAGE 2 OF 5

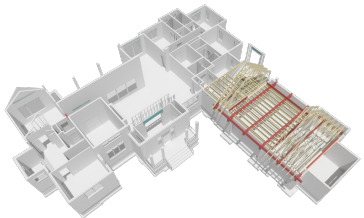

FLOOR FRAMING- 2ND LEVEL - FRONT

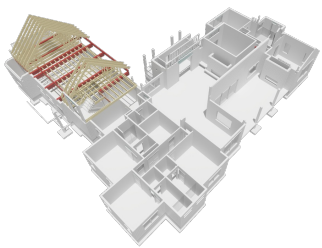

FLOOR FRAMING- 2ND LEVEL - REAR

SCAN FOR 3D FRAMING MODEL

SCAN FOR RENDERINGS

SCAN FOR ENGINEERED CALCS

PROJECT NO. 1-26-006

4 BDRM 5-3/4 BATH
TAMARACK TH 1 LOT 1 VALLEY CO, ID

SHEET SIZE 36" x 48"

INITIAL DATE 04/15/2026
PRINT DATE 10/23/2026

DRAWN BY: Steve

FLOOR LAYOUT - 2ND LEVEL

SHEET INDEX

PAGE	TITLE
A1	FOUNDATION
A2	FLOOR LAYOUT - 1ST LEVEL
A3	FLOOR LAYOUT - 2ND LEVEL
A4	ROOF LAYOUT - 1ST LEVEL
A5	ROOF LAYOUT - 2ND LEVEL

SMC Design
209.241.1255
Nampa, ID

SHEET NUMBER A3
PAGE 3 OF 5

FLOOR FRAME SHEET - WORK
1/4 IN = 1 FT

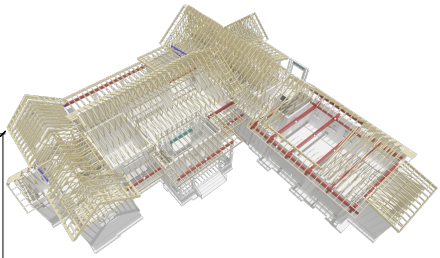

ROOF FRAMING- 1ST LEVEL - FRONT

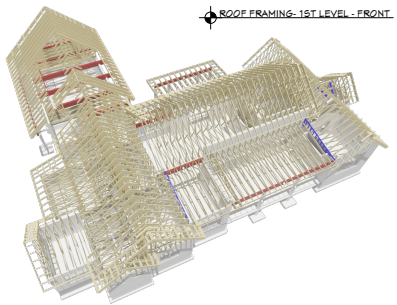

ROOF FRAMING- 1ST LEVEL - REAR

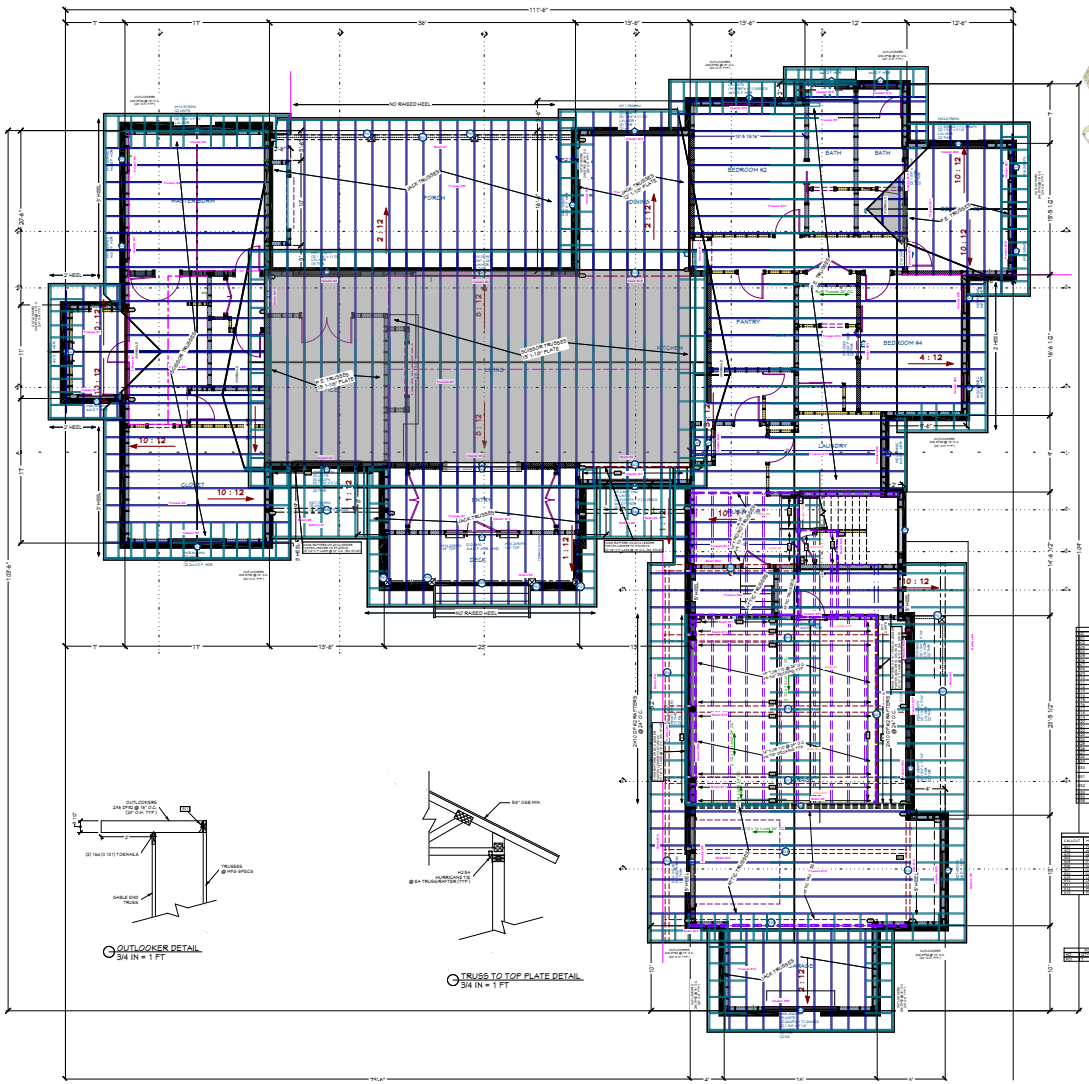

OUTLOOKER DETAIL
3/4 IN = 1 FT

TRUSS TO TOP PLATE DETAIL
3/4 IN = 1 FT

ROOF LAYOUT SHEET - WORK - WALL FRAMING
1/4 IN = 1 FT

ROOF MATERIALS

RIDGE CAP	449 Ft.
30 CEIL. FLASHING	163 Ft.
BEND TO SLOPE FLASHING	192 Ft.
RIDGE VENT	256 Ft.
METAL ROOFING	41.72 Sq. Ft.
SHINGLES	1,670.8 Sq. Ft.
CORNER	120 Ft.
GABLE FASCIA	42 Ft.
EAVE FASCIA	202 Ft.
DRIP EDGE	1397 Ft.

ROOF FRAMING NOTES:
ALL EAVE OVERHANGS 24" UNO
ALL GABLE OVERHANGS 18" UNO

SHEET INDEX

PAGE	TITLE
A1	FOUNDATION
A2	FLOOR LAYOUT - 1ST LEVEL
A3	FLOOR LAYOUT - 2ND LEVEL
A4	ROOF LAYOUT - 1ST LEVEL
A5	ROOF LAYOUT - 2ND LEVEL

SCAN FOR CURRENT PLAN
SCAN FOR REFERENCE
SCAN FOR ENGINEERED CALCS

PROJECT NO.
-26-006

4 BDRM 5 3/4 BATH
TAMARACK FH 1 LOT 1 VALLEY CO ,ID

CONTRACTOR TO VERIFY ALL DETAILS, DIMENSIONS, AND SPECIFICATIONS PRIOR TO CONSTRUCTION. ANY ERROR OR ANY OMISSION AND/OR DISCREPANCIES TO SMC DESIGN, THEIR AGENTS OR EMPLOYEES SHALL RELIEVE SMC DESIGN FROM ANY AND ALL LIABILITY RESULTING OR ARISING FROM SUCH ERROR, OMISSION AND/OR DISCREPANCY. CONTRACTOR SHALL BE RESPONSIBLE FOR ANY AND ALL CONSTRUCTION PERFORMED PRIOR TO THE RECEIPT OF APPROVED CONSTRUCTION DRAWINGS. DO NOT SCALE DRAWINGS. CONTRACTOR SHALL VERIFY ALL DIMENSIONS ON SITE BEFORE CONSTRUCTION. SMC DESIGN SHALL NOT BE HELD LIABLE FOR ANY DIMENSIONAL DISCREPANCIES FOUND ON SITE AFTER CONSTRUCTION HAS BEGUN. CONTRACTOR SHALL BE RESPONSIBLE FOR ALL DIMENSIONS AND CONDITIONS ON THE JOB SITE. DO NOT SCALE DRAWINGS. ANY CONSTRUCTION PERFORMED BY CONTRACTOR PRIOR TO APPROVAL OF SHOP DRAWINGS IS AT CONTRACTOR'S RISK. CONTRACTOR SHALL BE RESPONSIBLE FOR ALL CONSTRUCTION TECHNIQUES EMPLOYED IN THE PERFORMANCE OF THE WORK. CONTRACTOR SHALL BE RESPONSIBLE FOR ALL SAFETY PRECAUTIONS AND PROGRAMS IN CONNECTION WITH THE WORK. THESE REQUIREMENTS SHALL APPLY CONTINUOUSLY AND NOT BE LIMITED TO NORMAL WORKING HOURS. CONTRACTOR SHALL DEFEND, INDEMNIFY AND HOLD HARMLESS SMC DESIGN AND ITS CONSULTANTS FROM ANY AND ALL LIABILITIES, DAMAGES, LOSSES AND CLAIMS ARISING OUT OF THE PERFORMANCE OF THE WORK OF THE CONTRACT DOCUMENTS, PROVIDED THAT ANY SUCH CLAIM, DAMAGE, LOSS OR EXPENSE IS ATTRIBUTABLE TO BODILY INJURY, SICKNESS, DISEASE OR DEATH OF ANY PERSON OR INJURY TO OR DESTRUCTION OF TANGIBLE PROPERTY (OTHER THAN THE WORK ITSELF) INCLUDING THE LOSS OF USE RESULTING THEREFROM, CAUSED IN WHOLE OR IN PART BY ANY NEGLIGENT ACT OR OMISSION OF CONTRACTOR, ANY SUBCONTRACTOR, ANY SUPPLIER, OR ANY PERSON OR ORGANIZATION DIRECTLY OR INDIRECTLY EMPLOYED BY ANY OF THEM TO PERFORM OR FURNISH ANY OF THE WORK OR ANYONE FOR WHOSE ACTS ANY OF THEM MAY BE LIABLE, REGARDLESS OF WHETHER OR NOT SUCH CLAIM, DAMAGE, LOSS OR EXPENSE IS CAUSED IN PART BY A PARTY INDEMNIFIED HEREUNDER.

SHEET SIZE
36" x 48"

INITIAL DATE 09/19/2024
PRINT DATE 10/23/2026

DRAWN BY:
Steve

ROOF LAYOUT - 1ST LEVEL

SMC Design
208.249.1258
Nampa, ID

SHEET NUMBER
A4
PAGE 4 OF 5

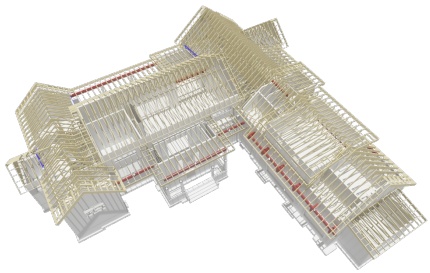

ROOF FRAMING- 2ND LEVEL - FRONT

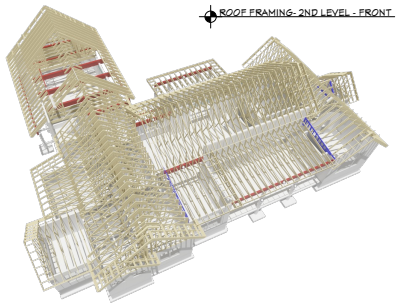

ROOF FRAMING- 1ST LEVEL - REAR

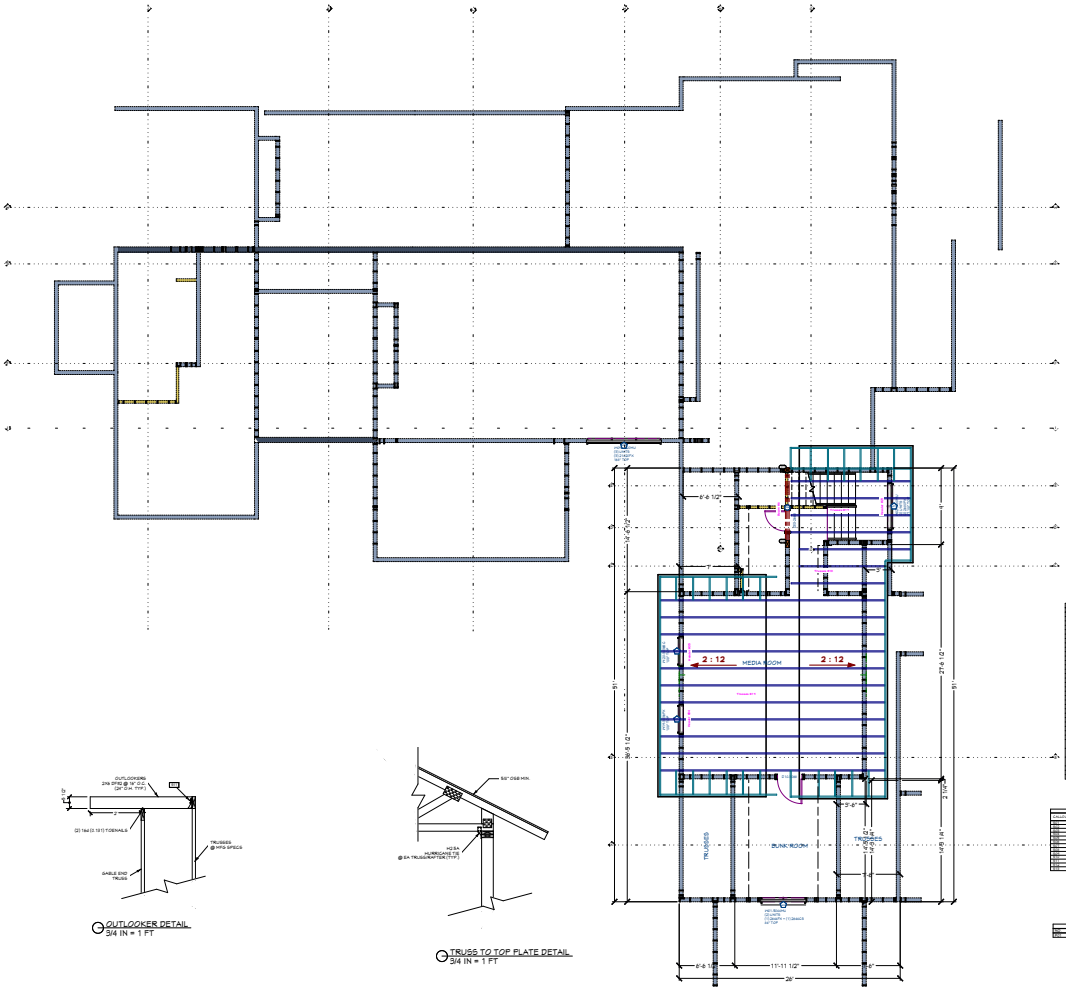

OUTLOOKER DETAIL
3/4 IN = 1 FT

TRUSS TO TOP PLATE DETAIL
3/4 IN = 1 FT

ROOF LAYOUT SHEET - WORK - LOADS
1/4 IN = 1 FT

ROOF MATERIALS

RIDGE CAP	443 Ft.
30 GAL. FLASHING	443 Ft.
BEND TO SUIT FLASHING	1362 Ft.
RIDGE VENT	296 Ft.
METAL ROOFING	41.72 Sq. Ft.
SHINGLES	1670.8 Sq. Ft.
CONCRETE	1670.8 Sq. Ft.
GABLE FASCIA	42 Ft.
EAVE FASCIA	202 Ft.
DRIP EDGE	1397 Ft.

ROOF FRAMING NOTES:
ALL EAVE OVERHANGS 24" UNO
ALL GABLE OVERHANGS 18" UNO

SHEET INDEX

PAGE	TITLE
A1	FOUNDATION
A2	FLOOR LAYOUT - 1ST LEVEL
A3	FLOOR LAYOUT - 2ND LEVEL
A4	ROOF LAYOUT - 1ST LEVEL
A5	ROOF LAYOUT - 2ND LEVEL

SCAN FOR CORRECT PLAN
SCAN FOR REFERENCE
SCAN FOR ENGINEERED CALCS

PROJECT NO.
-26-006

4 BDRM 5 3/4 BATH
TAMARACK FH 1 LOT 1 VALLEY CO ,ID

CONTRACTOR TO VERIFY ALL DETAILS, DIMENSIONS, AND SPECIFICATIONS PRIOR TO CONSTRUCTION. ANY DISCREPANCY OR CONFLICT SHALL BE REPORTED TO SMC DESIGN IMMEDIATELY. THE CONTRACTOR OR BUILDER OF THIS PLAN ASSUMES SOLE RESPONSIBILITY FOR ANY CONSTRUCTION PERFORMED FROM THIS PLAN WHICH IS INCORRECT, INCOMPLETE, OR INCONSISTENT WITH LOCAL CODES AND ORDINANCES. SMC DESIGN SHALL NOT BE HELD LIABLE FOR ANY ERRORS OR OMISSIONS IN CONSTRUCTION RESULTING FROM USE OF THIS PLAN WITHOUT PROPER FIELD VERIFICATION BY THE CONTRACTOR OR BUILDER. BY USING THIS PLAN, THE CONTRACTOR OR BUILDER AGREES TO INDEMNIFY AND HOLD HARMLESS SMC DESIGN FROM ANY AND ALL CLAIMS, LIABILITIES, OR DAMAGES ARISING FROM CONSTRUCTION PERFORMED FROM THIS PLAN. IF SMC DESIGN IS NOT RETAINED FOR CONSTRUCTION ADMINISTRATION, SMC DESIGN ASSUMES NO RESPONSIBILITY FOR ANY CONSTRUCTION PERFORMED FROM THIS PLAN. BY USING THIS PLAN, THE CONTRACTOR OR BUILDER AGREES TO INDEMNIFY AND HOLD HARMLESS SMC DESIGN FROM ANY AND ALL CLAIMS, LIABILITIES, OR DAMAGES ARISING FROM CONSTRUCTION PERFORMED FROM THIS PLAN. IF SMC DESIGN IS NOT RETAINED FOR CONSTRUCTION ADMINISTRATION, SMC DESIGN ASSUMES NO RESPONSIBILITY FOR ANY CONSTRUCTION PERFORMED FROM THIS PLAN.

SHEET SIZE
36" x 48"

INITIAL DATE 09/19/2025
LAST DATE 10/03/2025

DRAWN BY:
Steve

ROOF LAYOUT - 2ND LEVEL

SMC Design
209.241.1255
Nampa, ID

SHEET NUMBER
A5
PAGE 5 OF 5

Beam #1 | GLB 6.75x13.5

ON PLAN: A3 Floor 2nd A4 Roof 1st

PASS

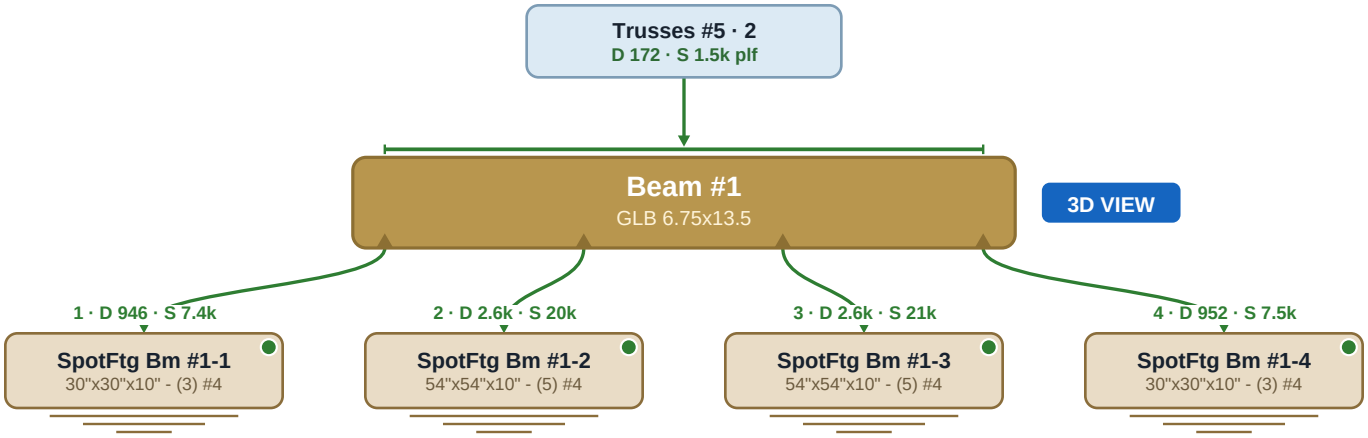

Beam #2 | GLB 5.5x18

ON PLAN: A3 Floor 2nd A4 Roof 1st

PASS

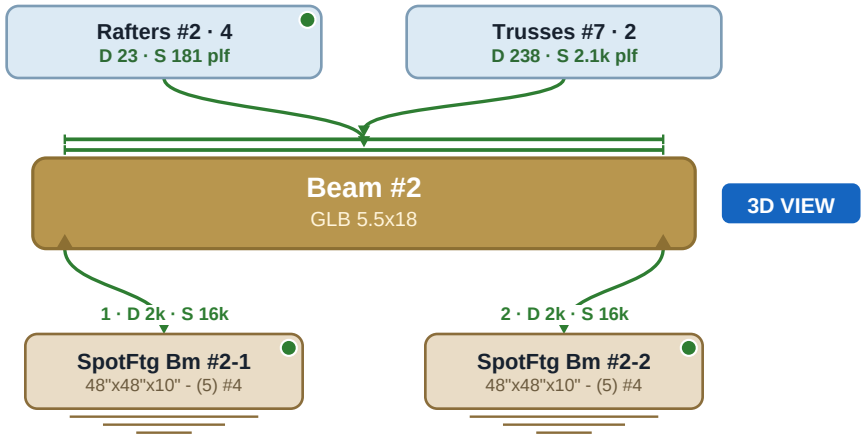

Beam #3 | GLB 5.5x10.5

ON PLAN: A3 Floor 2nd A4 Roof 1st

PASS

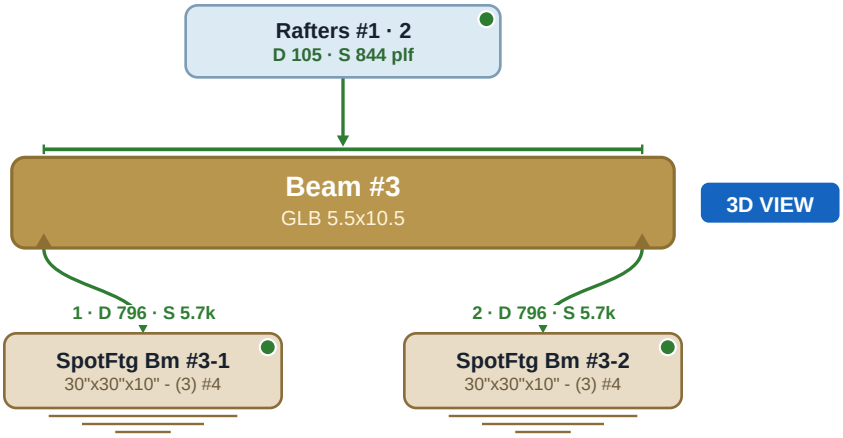

Beam #4 | GLB 5.5x10.5

ON PLAN: A3 Floor 2nd A4 Roof 1st

PASS

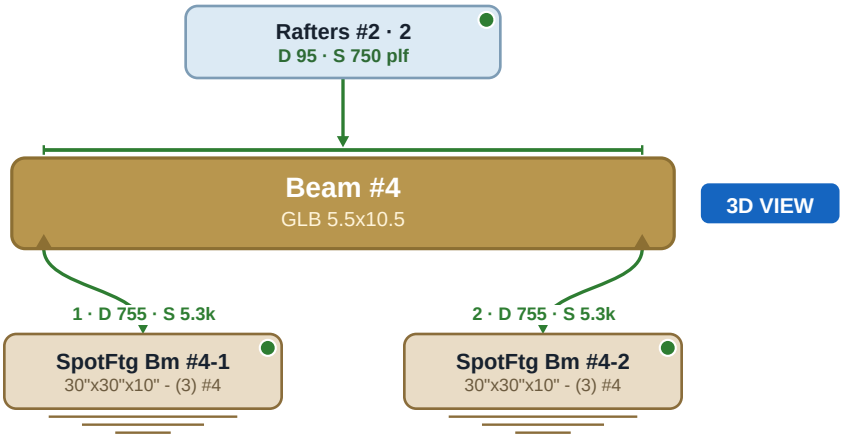

Beam #5 | GLB 6.75x13.5

ON PLAN: A3 Floor 2nd A4 Roof 1st

PASS

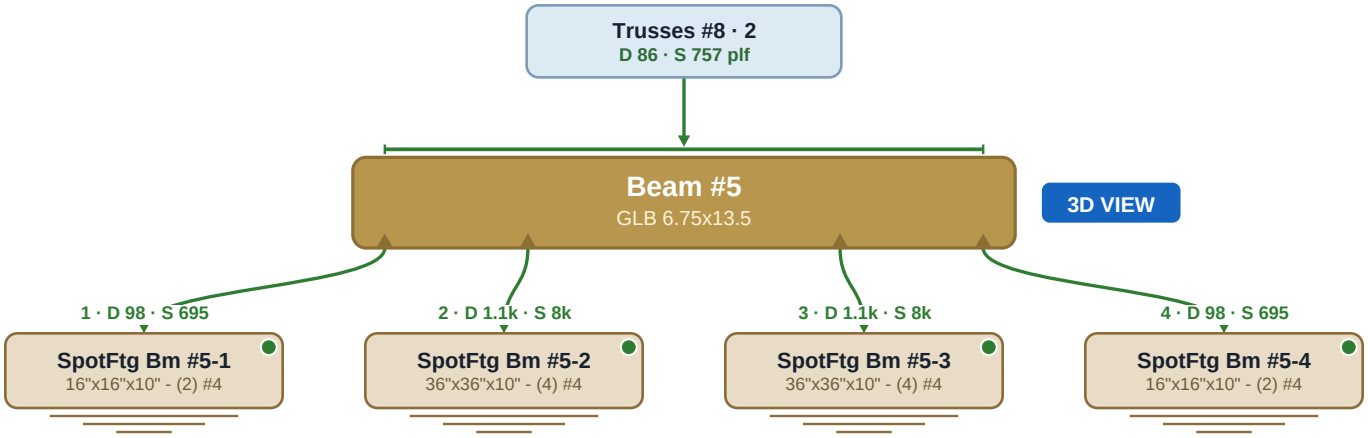

Beam #6 | (3) LVL 1.75x11.25

ON PLAN: A5 Roof 2nd

PASS

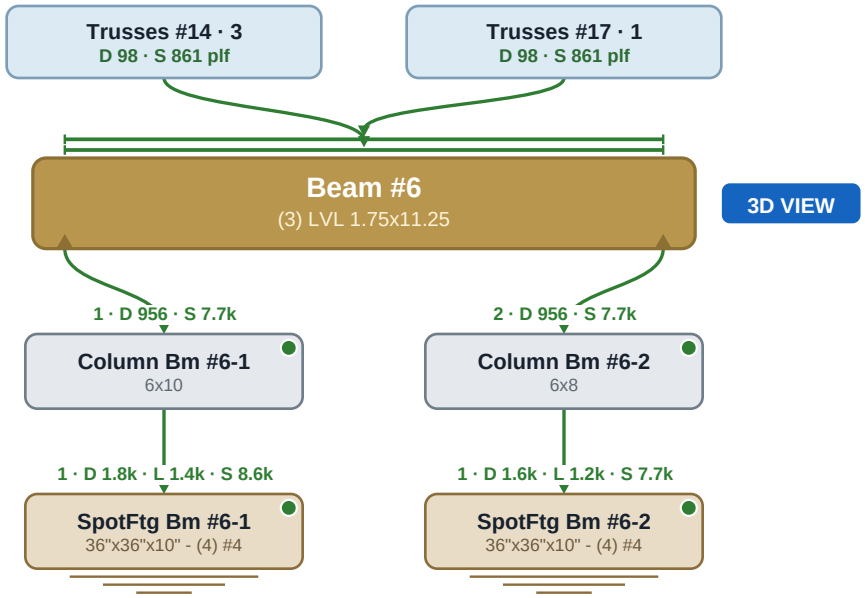

Beam #7 | (2) LVL 1.75x11.25

ON PLAN: A3 Floor 2nd A4 Roof 1st

PASS

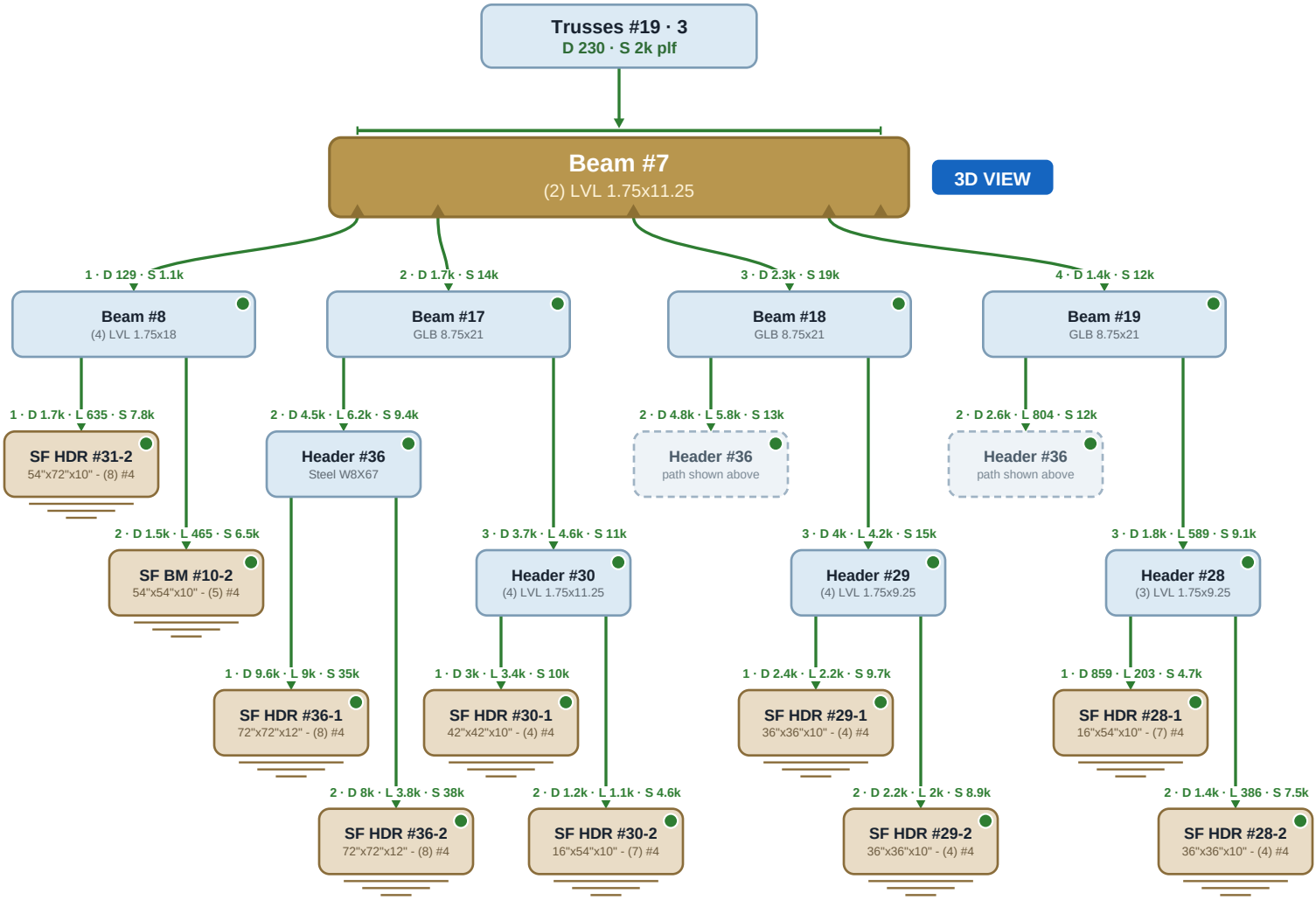

Beam #8 | (4) LVL 1.75x18

ON PLAN: A3 Floor 2nd A4 Roof 1st

PASS

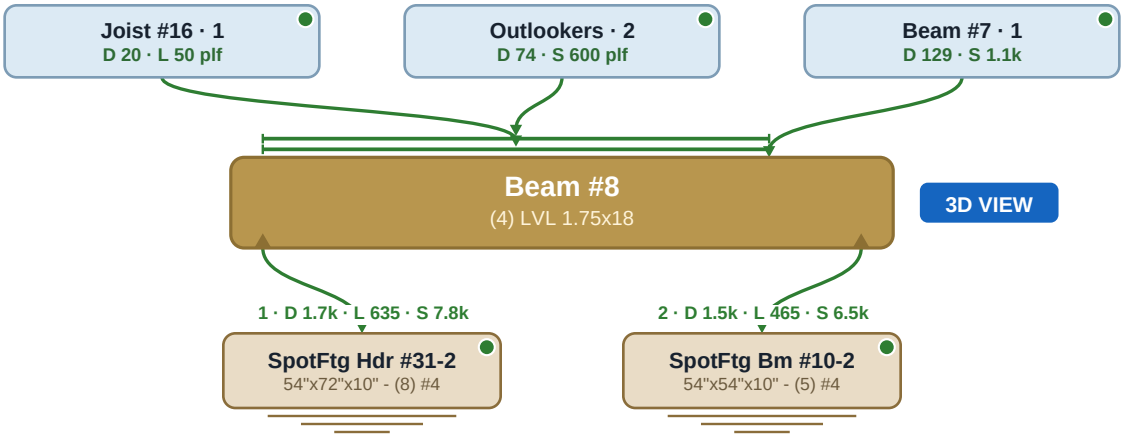

Beam #9 | GLB 6.75x16

ON PLAN: A3 Floor 2nd A4 Roof 1st

PASS

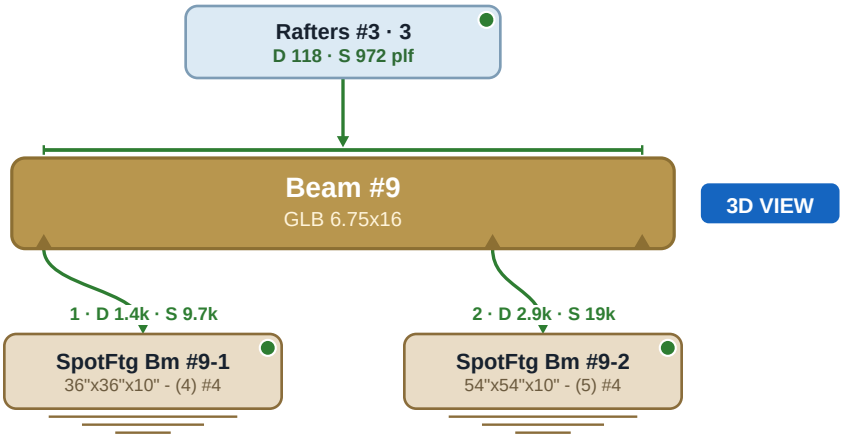

Beam #10 | GLB 5.5x21

ON PLAN: A3 Floor 2nd A4 Roof 1st

PASS

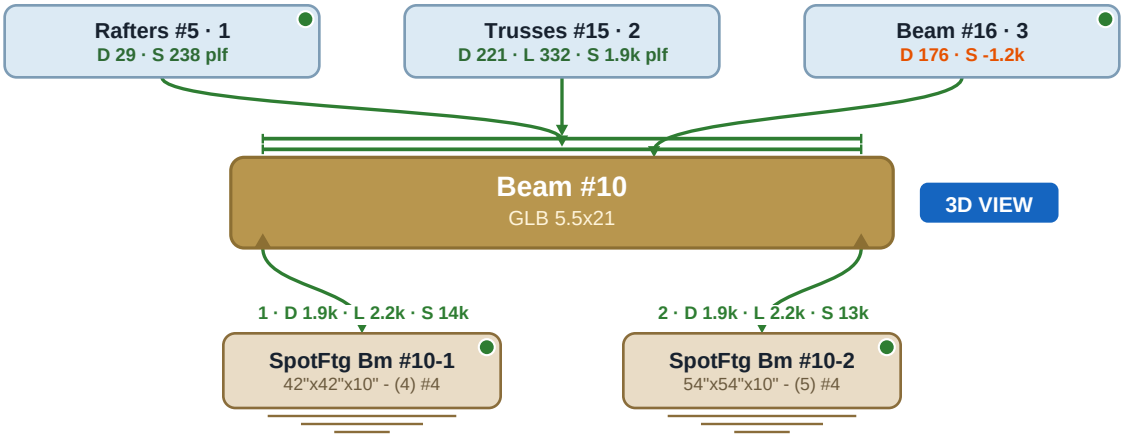

Beam #11 | (2) LVL 1.75x14

ON PLAN: A3 Floor 2nd A4 Roof 1st

PASS

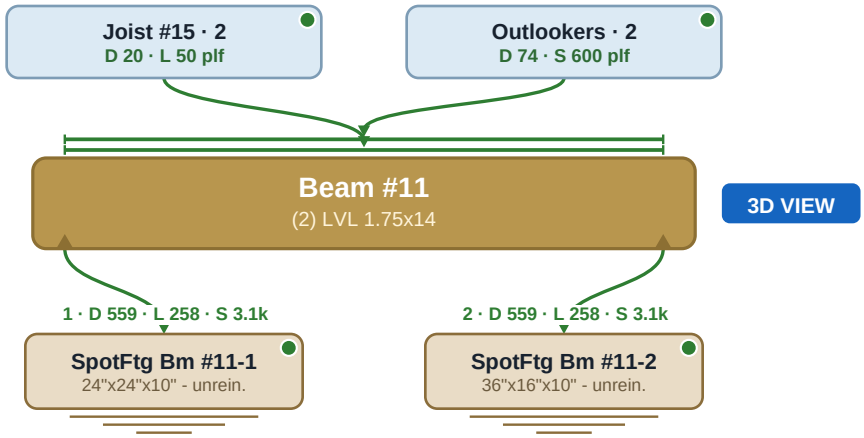

Beam #12 | GLB 5.5x13.5

ON PLAN: A3 Floor 2nd A4 Roof 1st

PASS

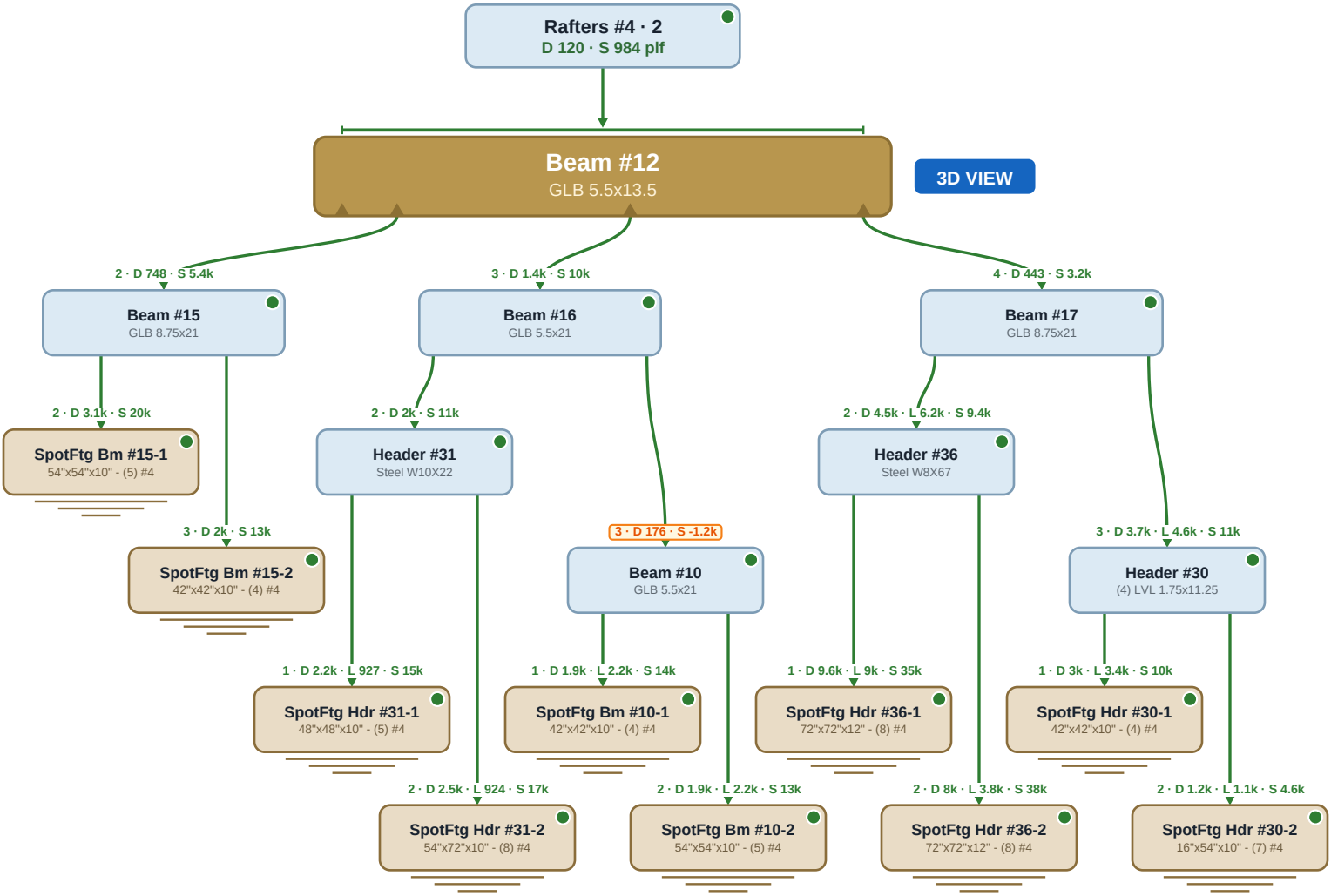

Beam #13 | GLB 8.75x18

ON PLAN: A3 Floor 2nd A4 Roof 1st

PASS

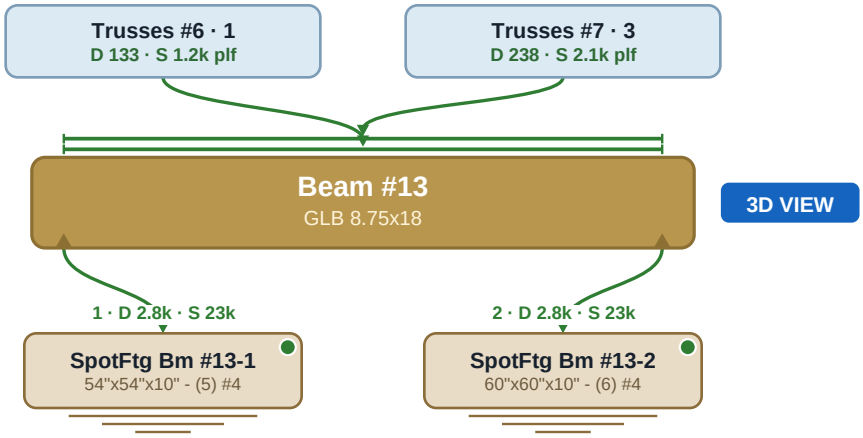

Beam #14 | GLB 5.5x13.5

ON PLAN: A3 Floor 2nd | A4 Roof 1st

PASS

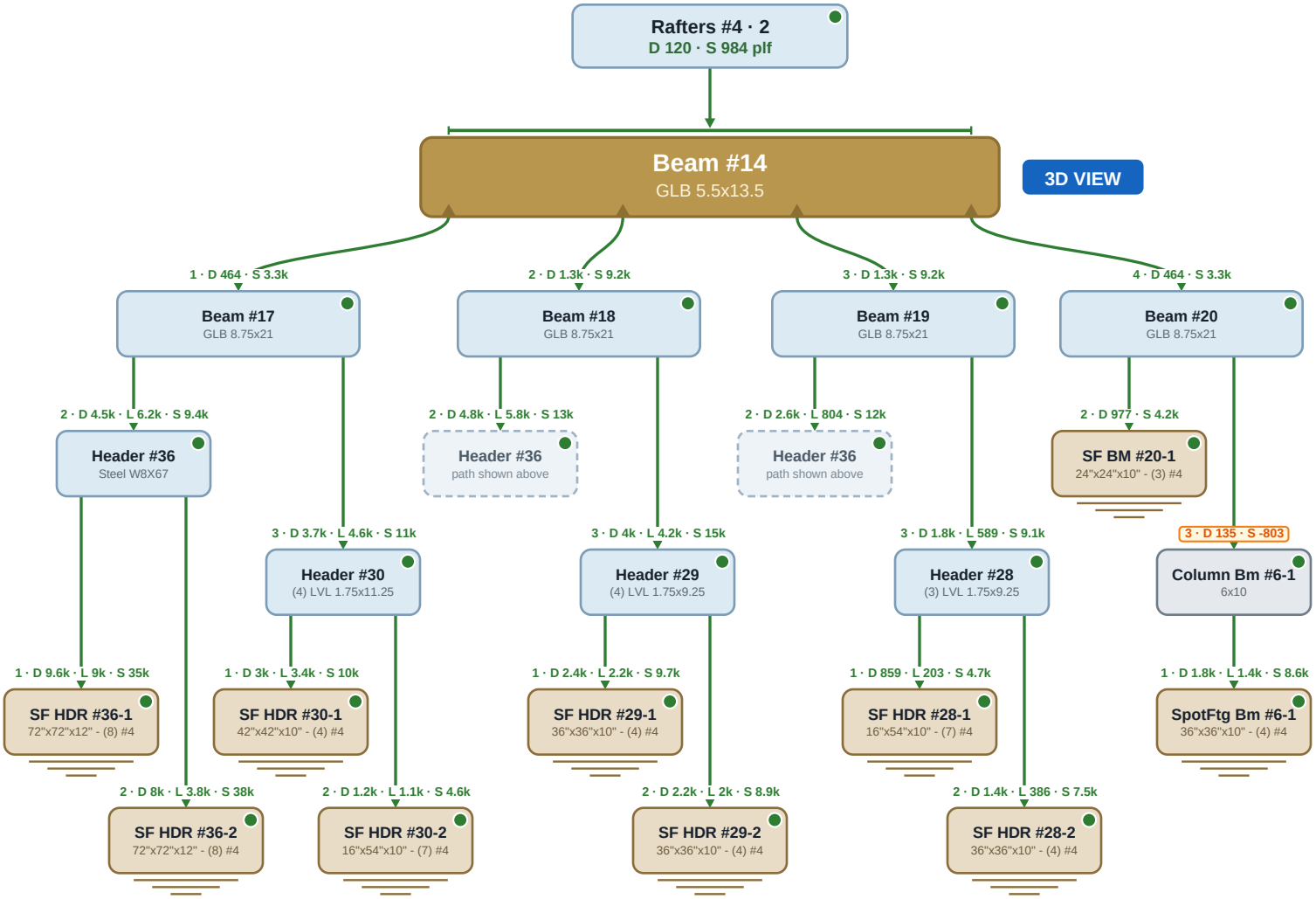

Beam #15 | GLB 8.75x21

ON PLAN: A3 Floor 2nd A4 Roof 1st

PASS

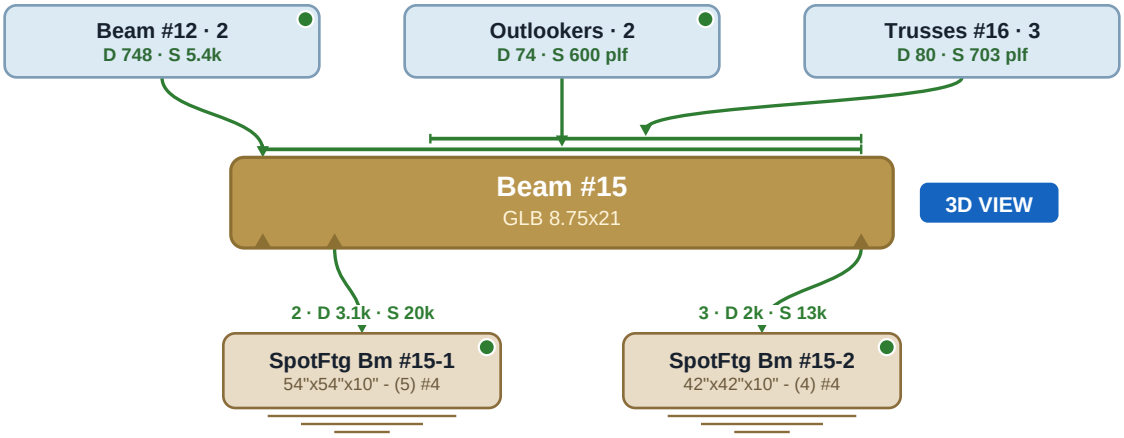

Beam #16 | GLB 5.5x21

ON PLAN: A3 Floor 2nd A4 Roof 1st

PASS

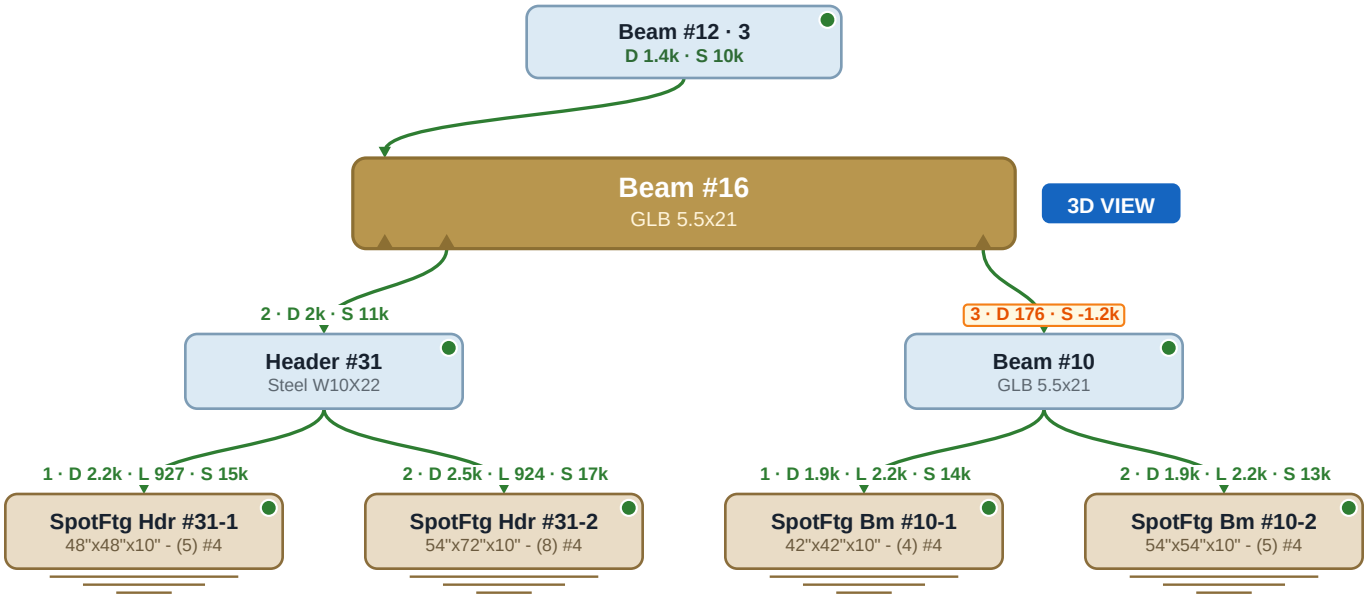

Beam #17 | GLB 8.75x21

ON PLAN: A3 Floor 2nd A4 Roof 1st

PASS

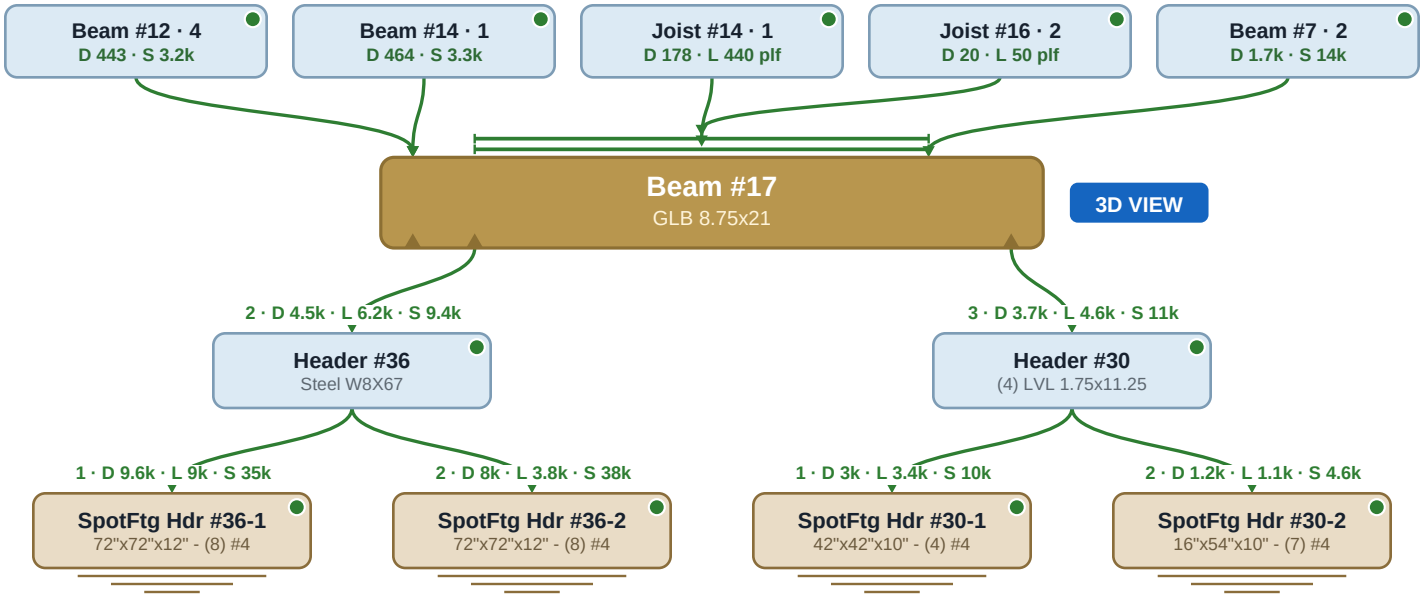

Beam #18 | GLB 8.75x21

ON PLAN: A3 Floor 2nd A4 Roof 1st

PASS

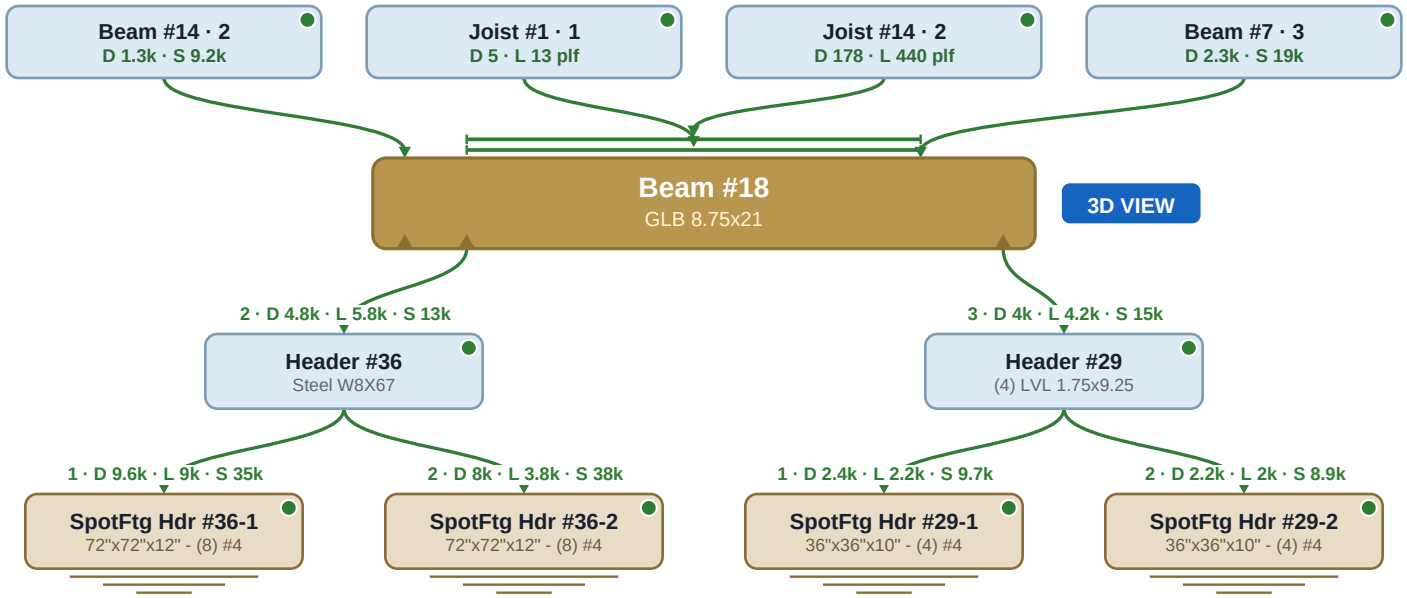

Beam #19 | GLB 8.75x21

ON PLAN: A3 Floor 2nd A4 Roof 1st

PASS

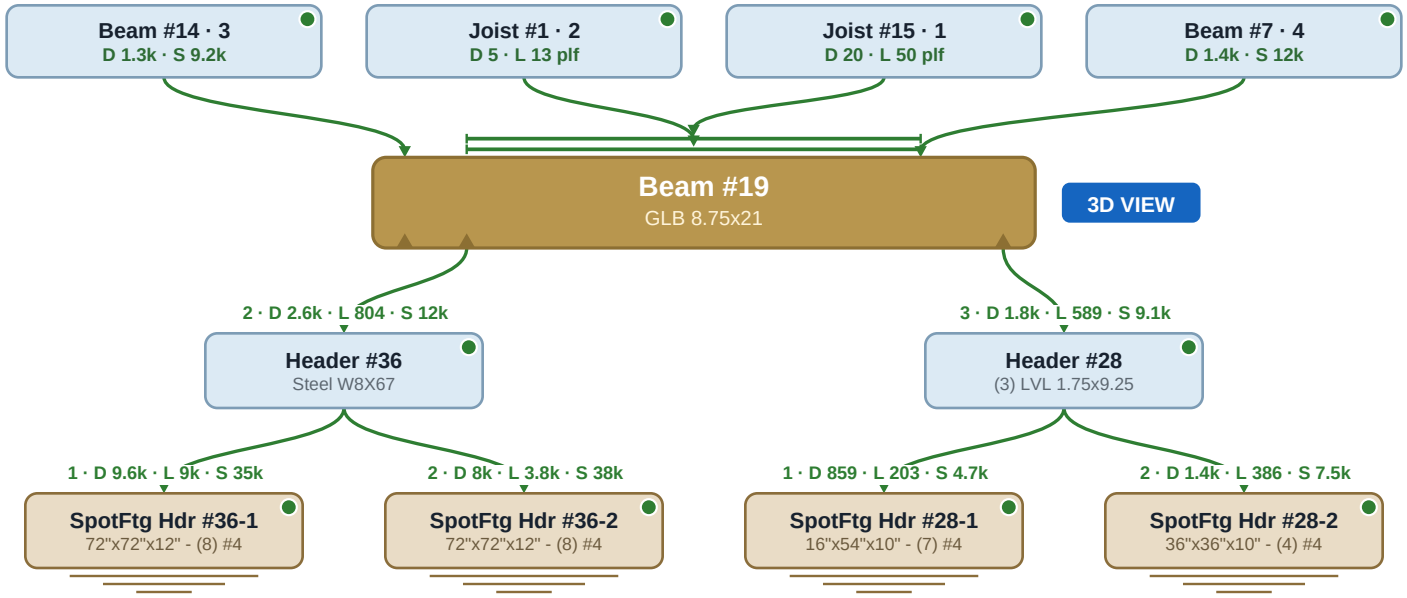

Beam #20 | GLB 8.75x21

ON PLAN: A3 Floor 2nd A4 Roof 1st

PASS

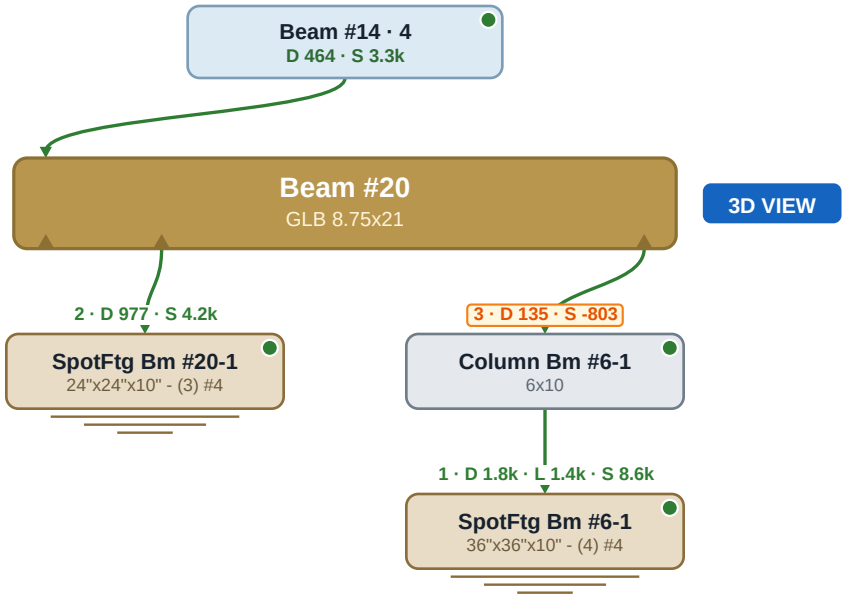

Beam #21 | 6x10

ON PLAN: A3 Floor 2nd A4 Roof 1st

PASS

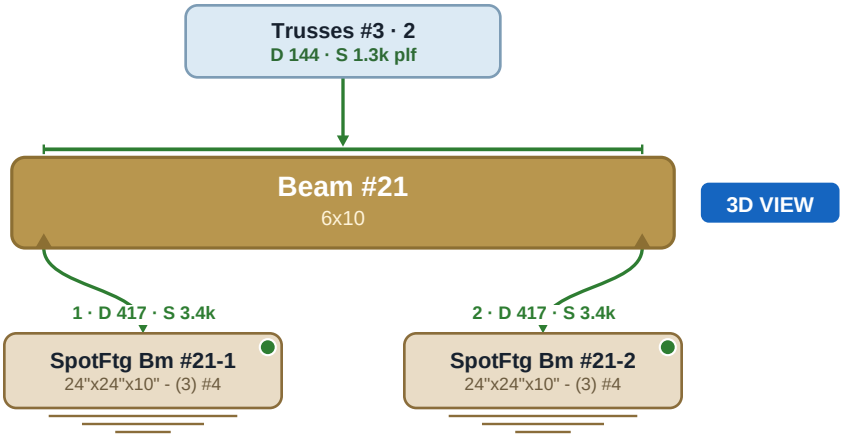

Beam #22 | (1) LVL 1.75x14

ON PLAN: A3 Floor 2nd A4 Roof 1st

PASS

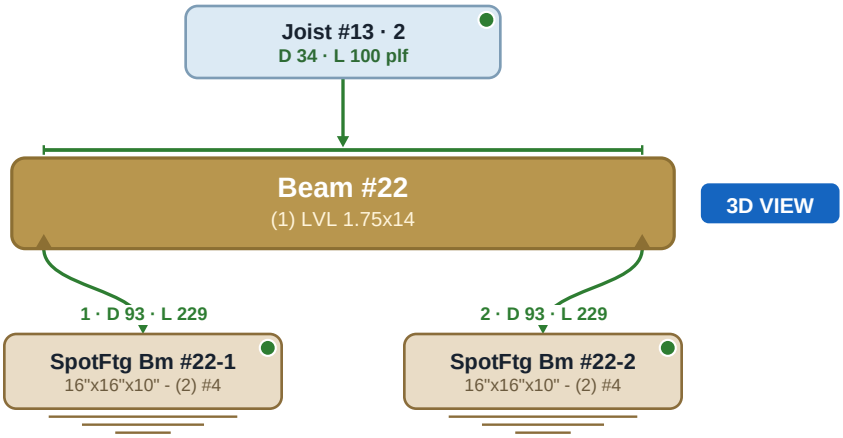

Beam #23 | (1) LVL 1.75x14

ON PLAN: A3 Floor 2nd

PASS

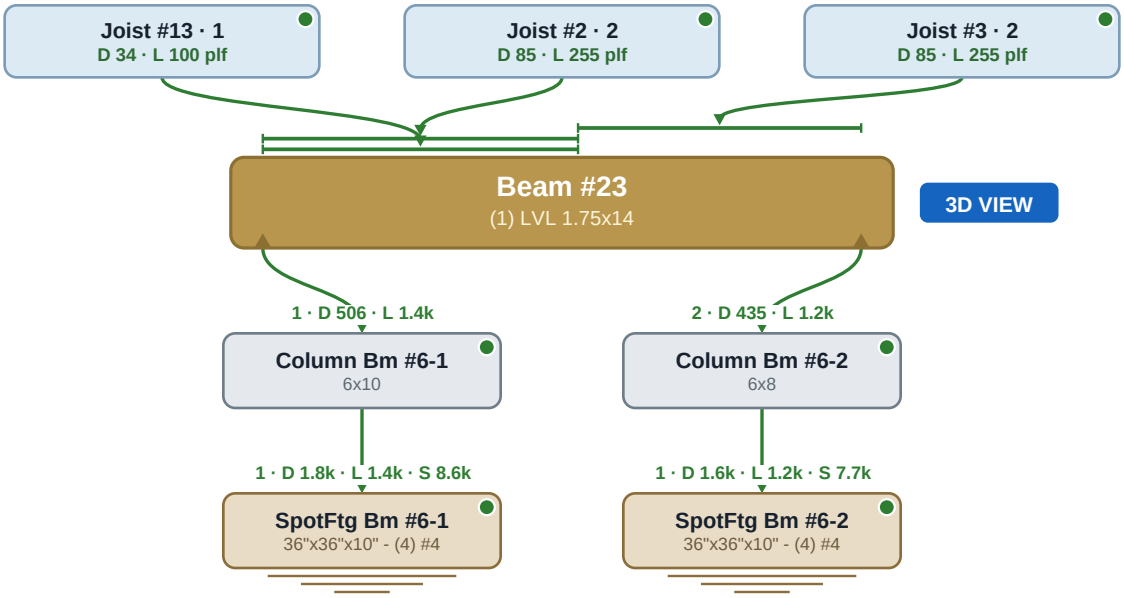

Beam #24 | 6x10

ON PLAN: A2 Floor 1st

PASS

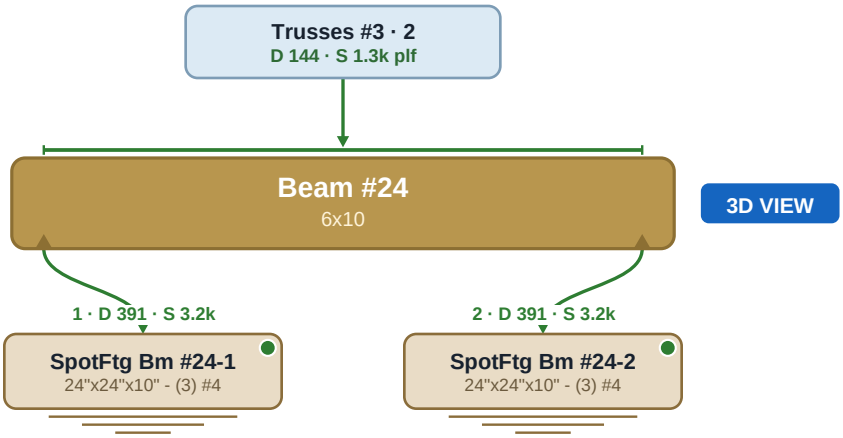

Beam #25 | 6x10

ON PLAN: A2 Floor 1st

PASS

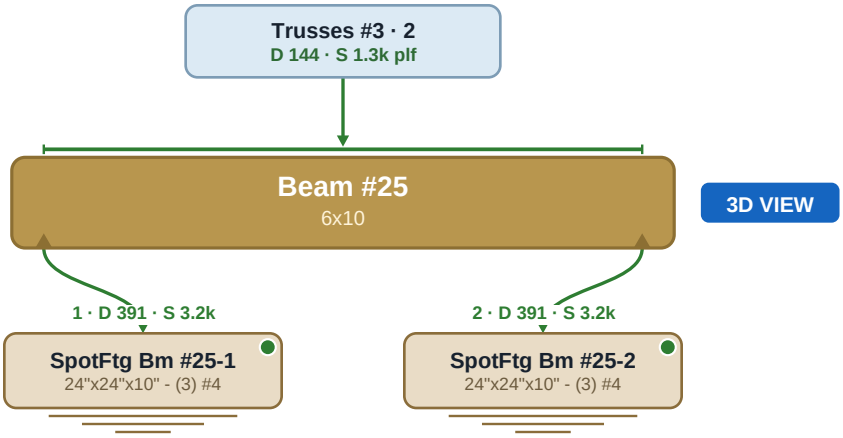

Beam #26 | 6x10

ON PLAN: A2 Floor 1st

PASS

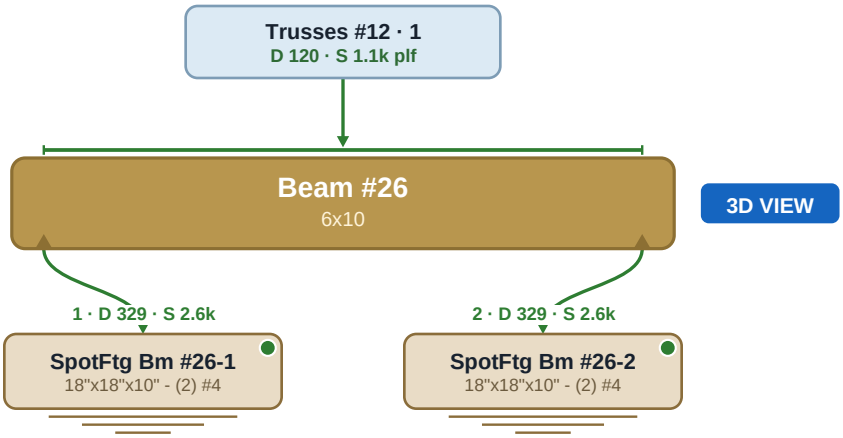

Beam #27 | 6x10

ON PLAN: A2 Floor 1st

PASS

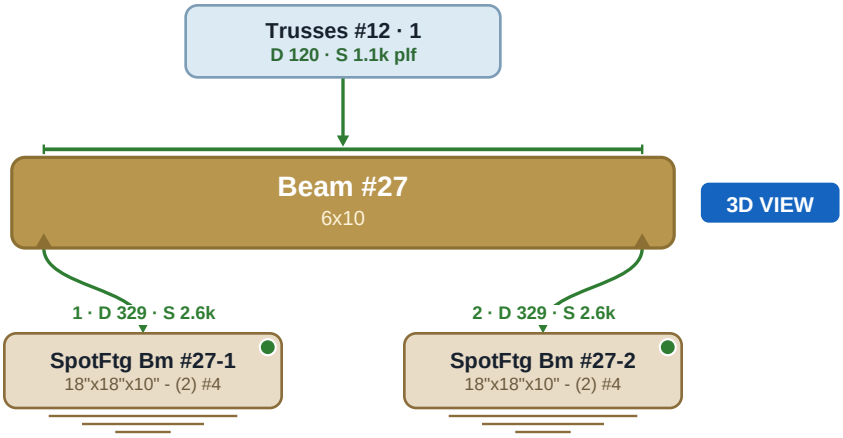

Beam #28 | (3) LVL 1.75x9.5

ON PLAN: A2 Floor 1st

PASS

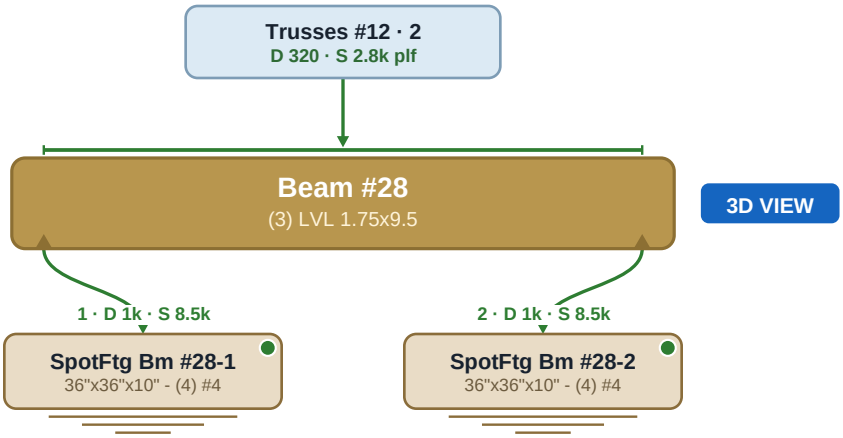

Beam #29 | 6x10

ON PLAN: A2 Floor 1st

PASS

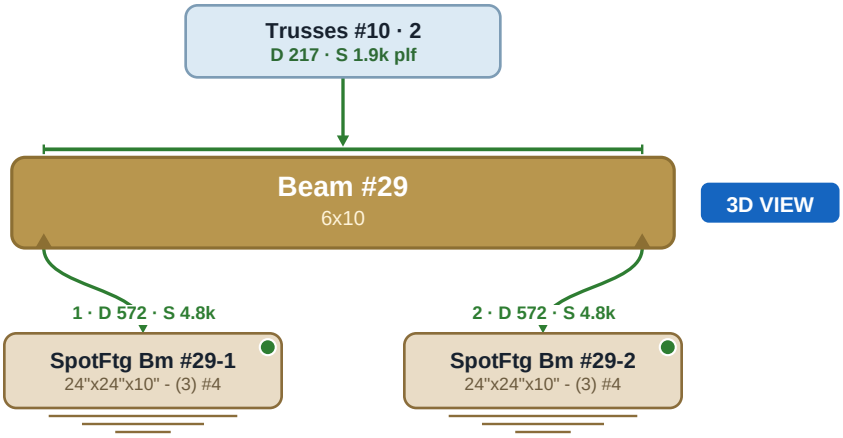

Girder #1 | 2-ply girder truss

ON PLAN: A3 Floor 2nd A4 Roof 1st

PASS

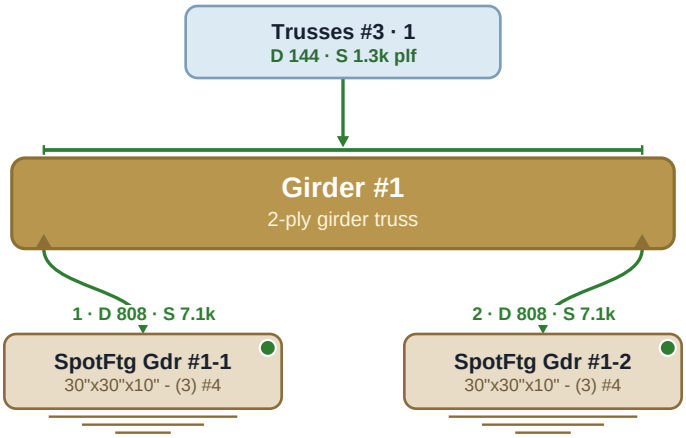

Header #1 | 4x8

ON PLAN: A3 Floor 2nd A4 Roof 1st

PASS

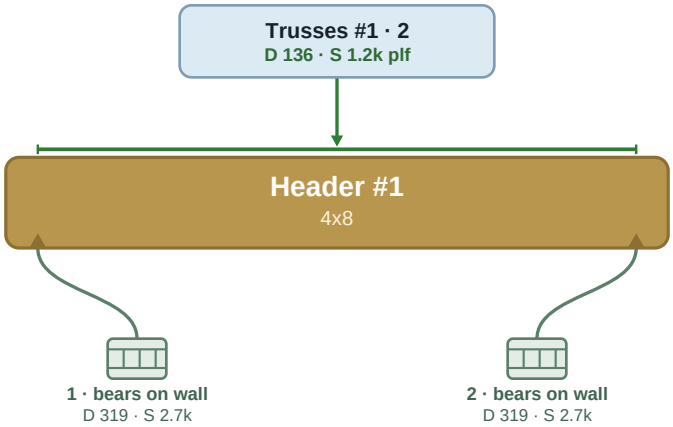

Header #2 | (2) LVL 1.75x9.25

ON PLAN: A3 Floor 2nd A4 Roof 1st

PASS

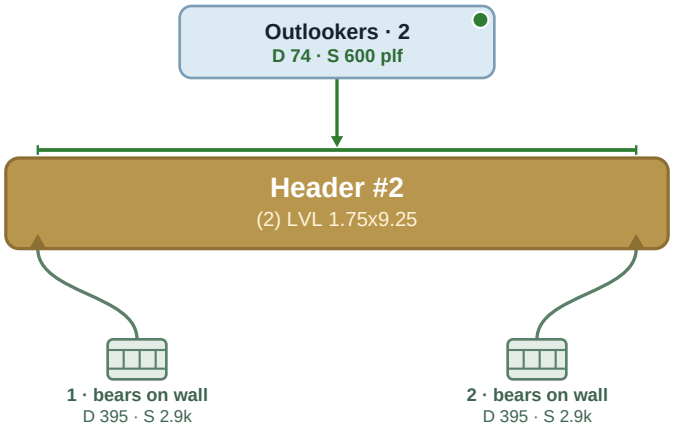

Header #3 | 4x8

ON PLAN: A3 Floor 2nd A4 Roof 1st

PASS

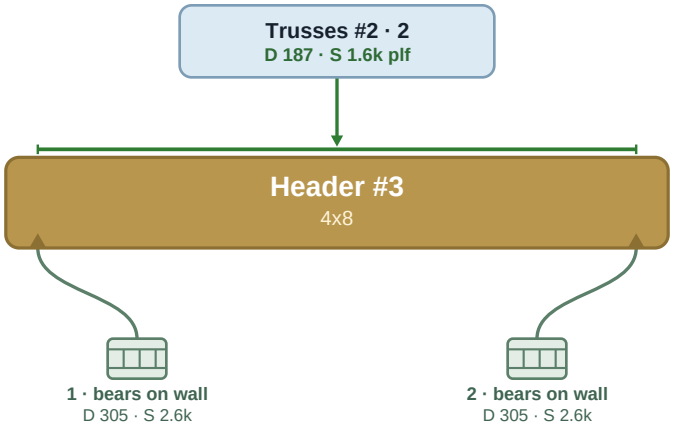

Header #4 | 4x8

ON PLAN: A3 Floor 2nd A4 Roof 1st

PASS

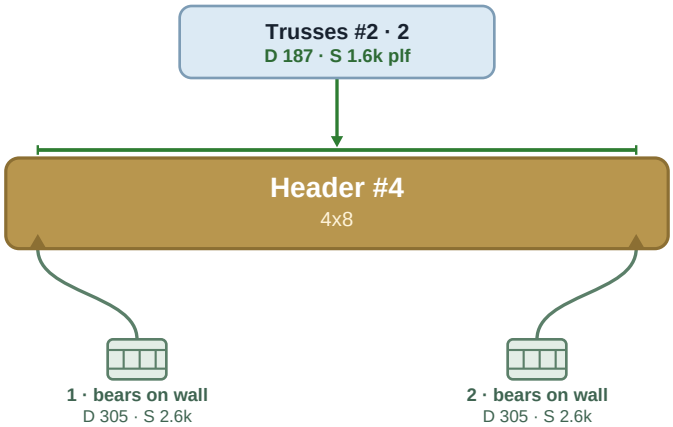

Header #5 | (2) 2x10

ON PLAN: A3 Floor 2nd A4 Roof 1st

PASS

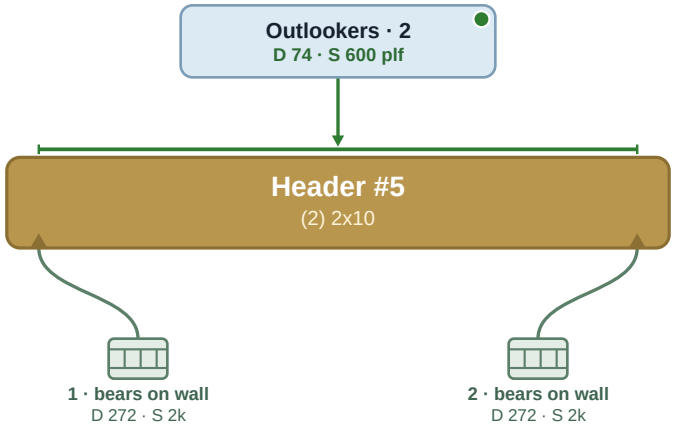

Header #6 | (3) LVL 1.75x11.875

ON PLAN: A3 Floor 2nd A4 Roof 1st

PASS

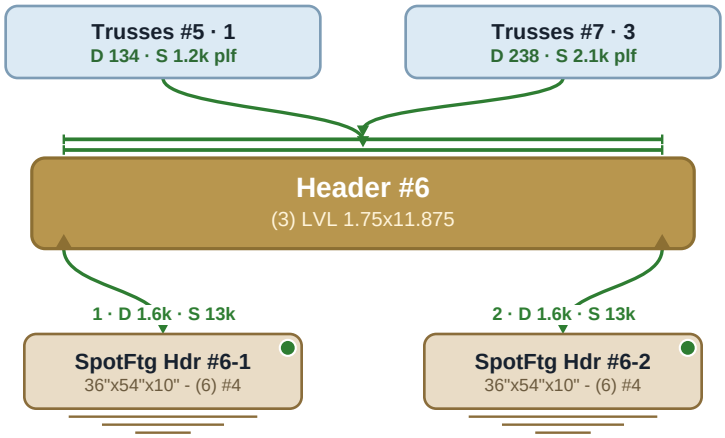

Header #7 | (4) LVL 1.75x9.25

ON PLAN: A3 Floor 2nd A4 Roof 1st

PASS

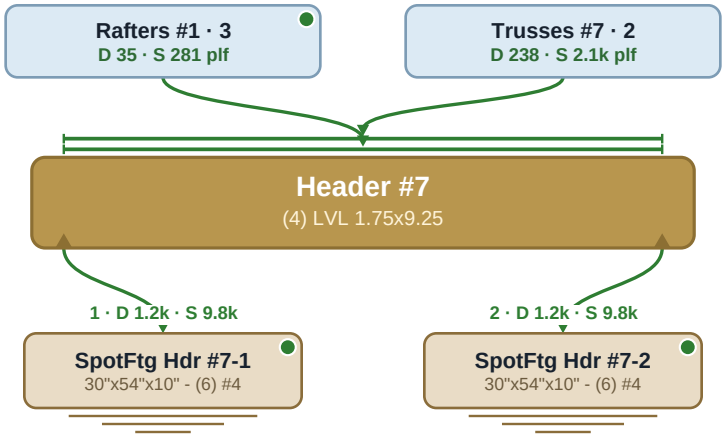

Header #8 | GLB 6.75x24

ON PLAN: A3 Floor 2nd A4 Roof 1st

PASS

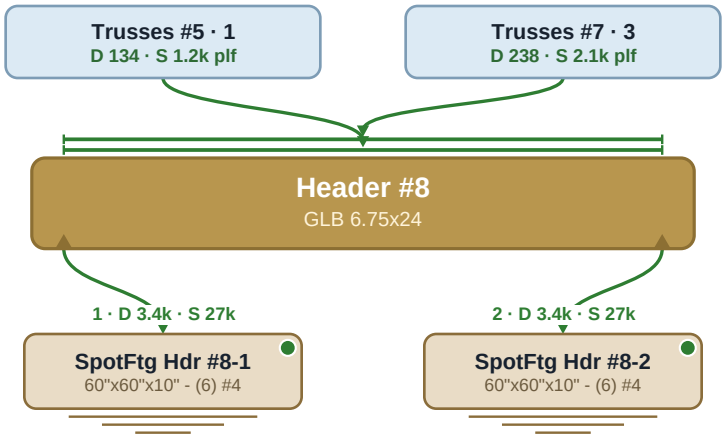

Header #9 | GLB 6.75x21

ON PLAN: A3 Floor 2nd A4 Roof 1st

PASS

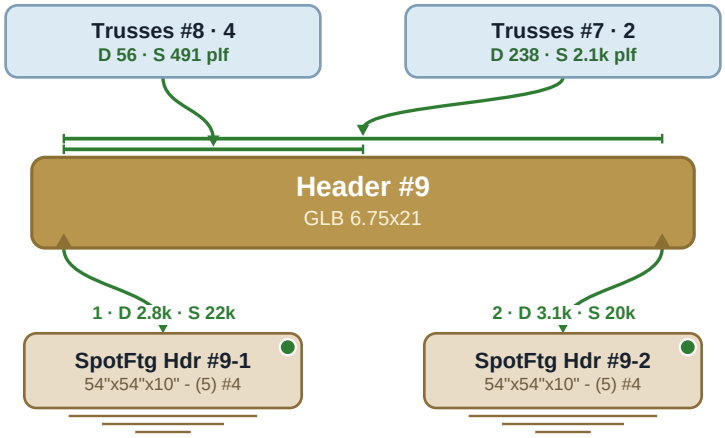

Header #10 | 4x8

ON PLAN: A3 Floor 2nd A4 Roof 1st

PASS

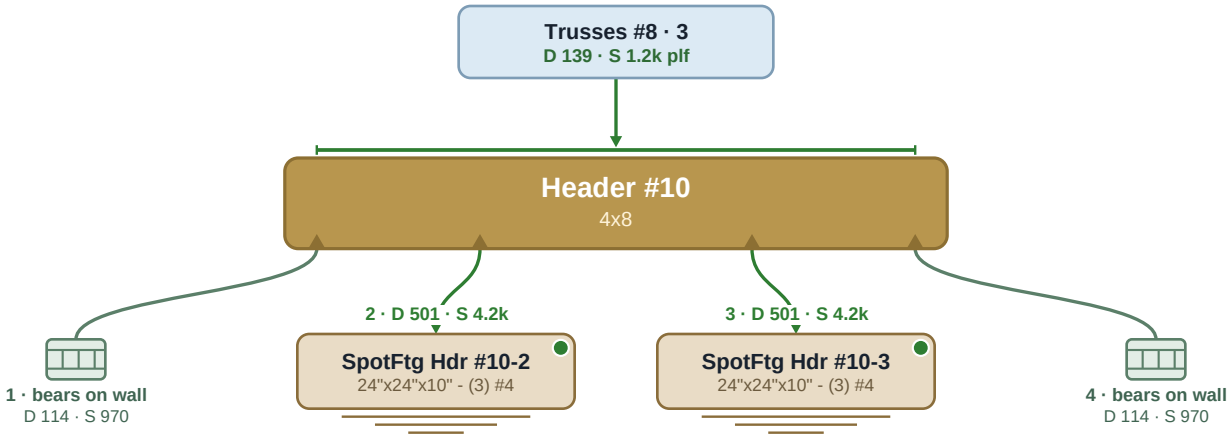

Header #11 | 4x8

ON PLAN: A3 Floor 2nd A4 Roof 1st

PASS

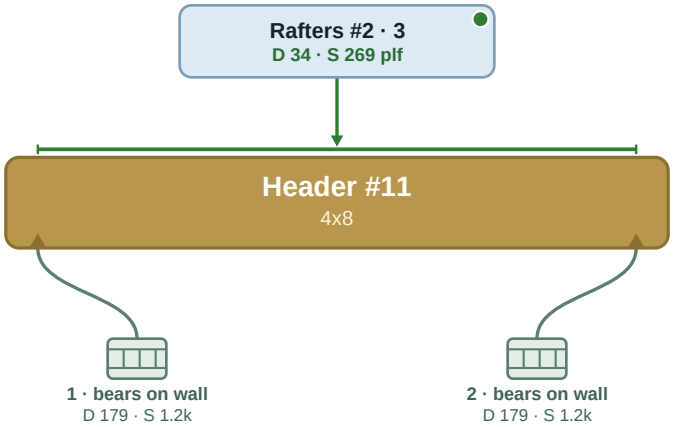

Header #12 | 4x10

ON PLAN: A3 Floor 2nd A4 Roof 1st

PASS

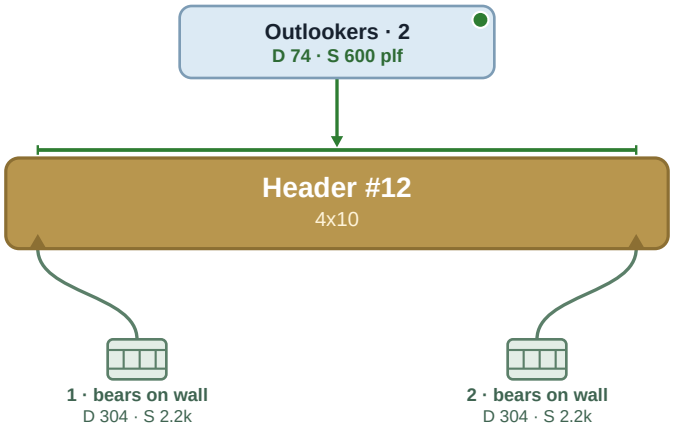

Header #13 | (3) LVL 1.75x11.25

ON PLAN: A3 Floor 2nd A4 Roof 1st

PASS

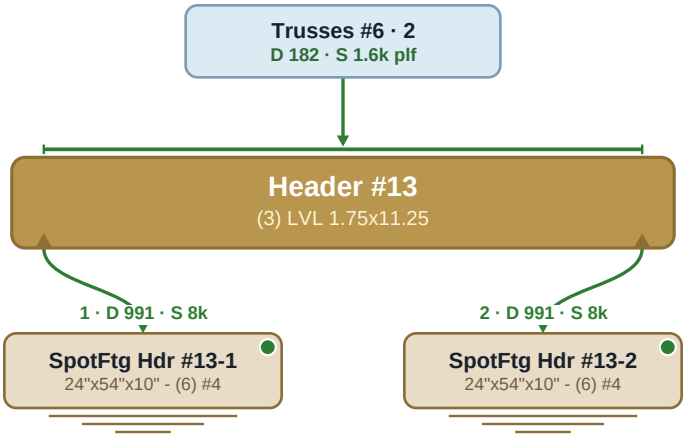

Header #14 | 4x8

ON PLAN: A3 Floor 2nd A4 Roof 1st

PASS

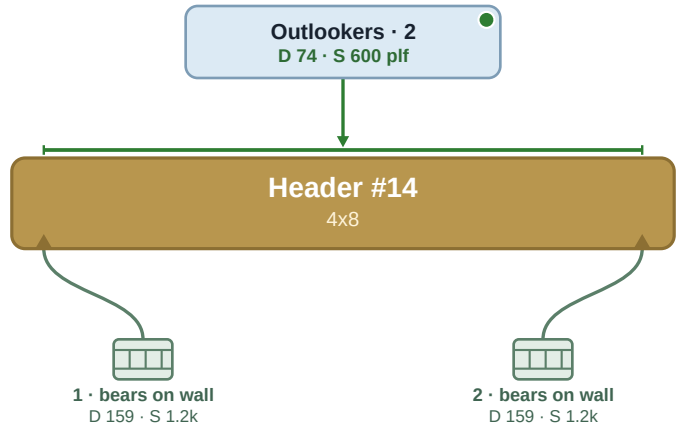

Header #15 | 4x8

ON PLAN: A3 Floor 2nd A4 Roof 1st

PASS

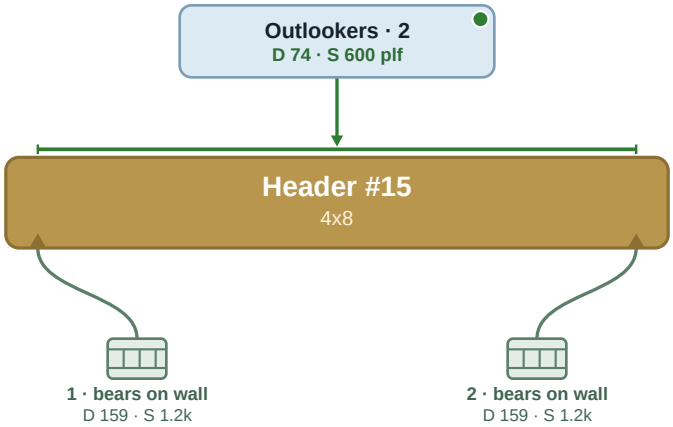

Header #16 | 4x10

ON PLAN: A3 Floor 2nd A4 Roof 1st

PASS

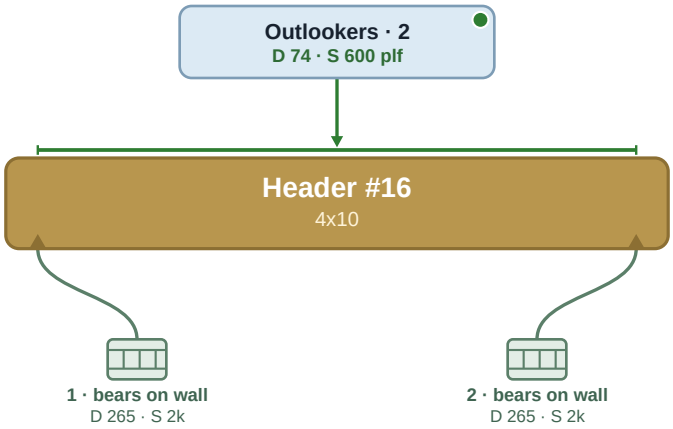

Header #17 | 4x8

ON PLAN: A3 Floor 2nd A4 Roof 1st

PASS

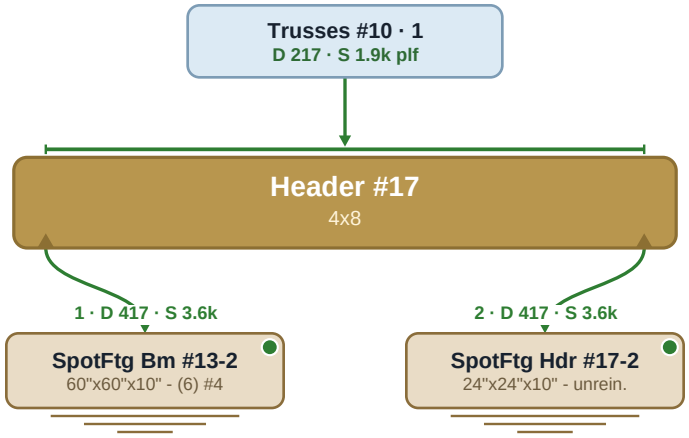

Header #18 | (2) LVL 1.75x7.25

ON PLAN: A3 Floor 2nd A4 Roof 1st

PASS

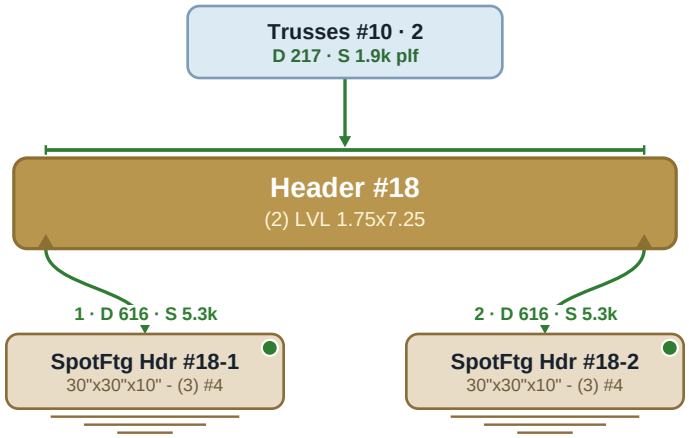

Header #19 | 4x8

ON PLAN: A3 Floor 2nd A4 Roof 1st PASS

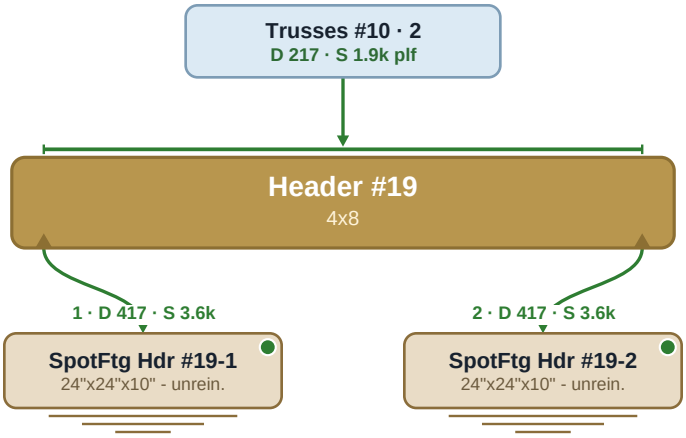

Header #20 | (2) LVL 1.75x9.25

ON PLAN: A3 Floor 2nd A4 Roof 1st PASS

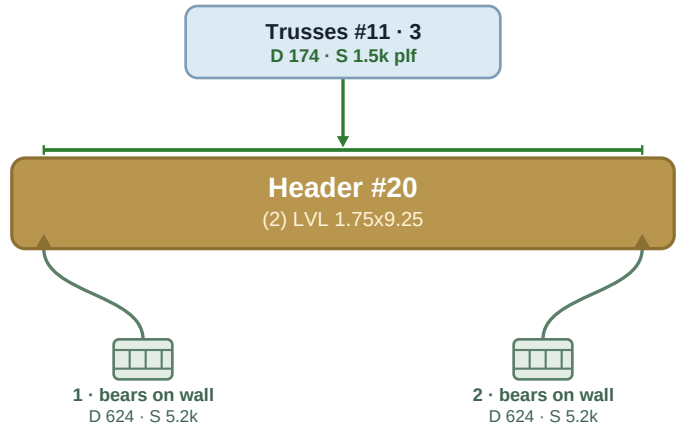

Header #21 | 4x8

ON PLAN: A3 Floor 2nd A4 Roof 1st

PASS

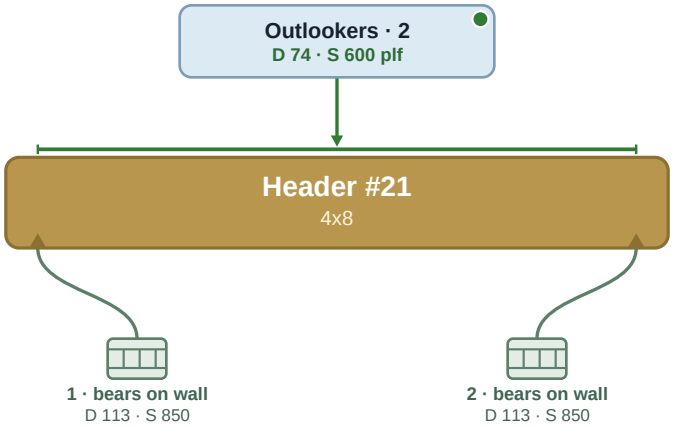

Header #22 | 4x8

ON PLAN: A3 Floor 2nd A4 Roof 1st

PASS

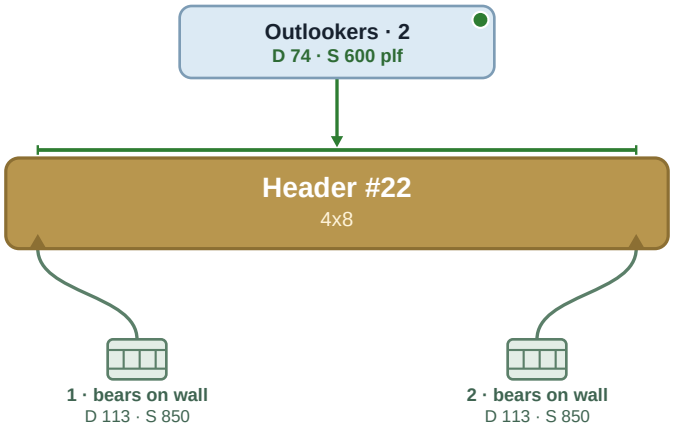

Header #23 | 4x8

ON PLAN: A3 Floor 2nd A4 Roof 1st

PASS

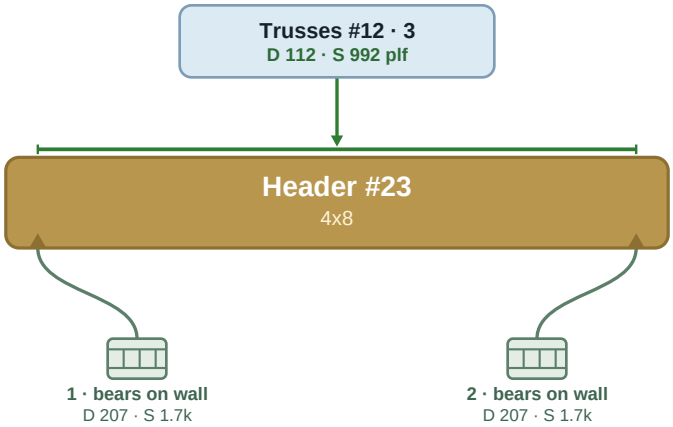

Header #24 | 4x8

ON PLAN: A3 Floor 2nd A4 Roof 1st

PASS

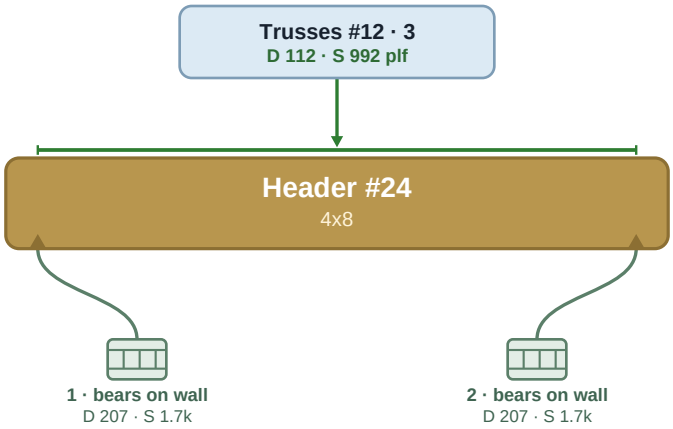

Header #25 | 4x8

ON PLAN: A3 Floor 2nd A4 Roof 1st

PASS

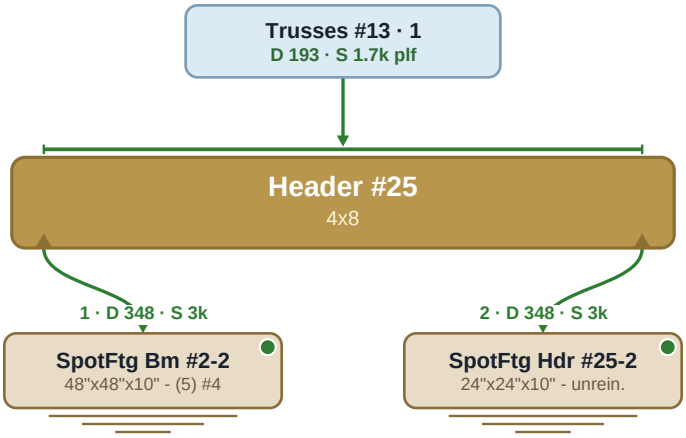

Header #26 | 6x8

ON PLAN: A3 Floor 2nd A4 Roof 1st

PASS

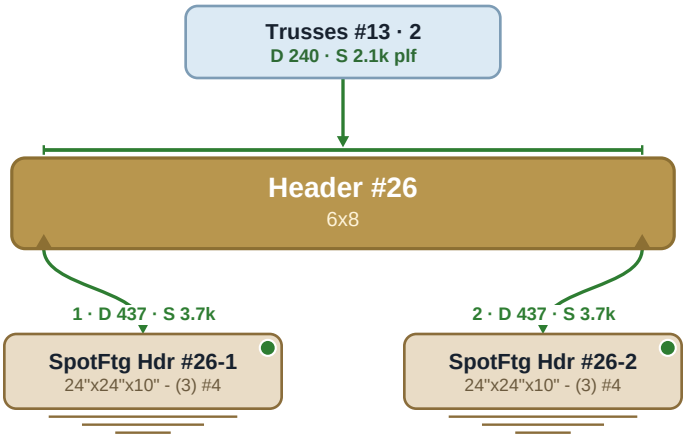

Header #27 | 6x10

ON PLAN: A5 Roof 2nd

PASS

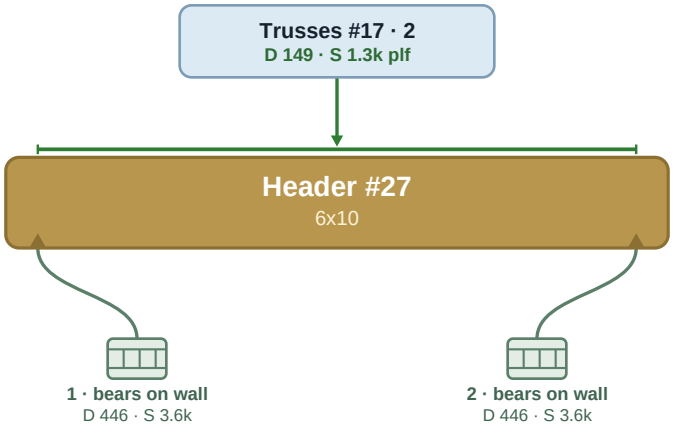

Header #28 | (3) LVL 1.75x9.25

ON PLAN: A3 Floor 2nd A4 Roof 1st

PASS

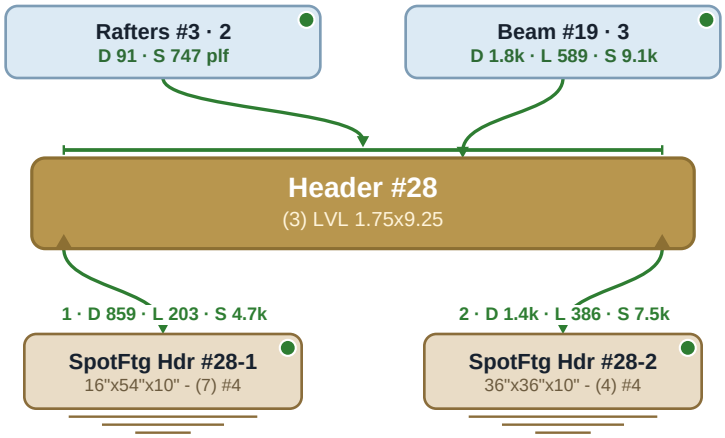

Header #29 | (4) LVL 1.75x9.25

ON PLAN: A3 Floor 2nd A4 Roof 1st

PASS

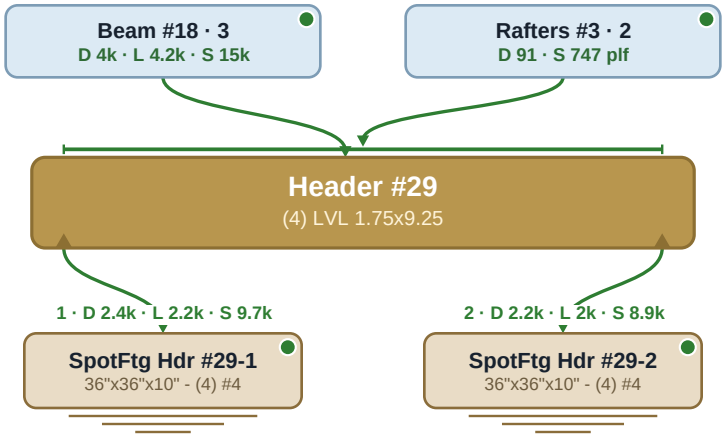

Header #30 | (4) LVL 1.75x11.25

ON PLAN: A3 Floor 2nd A4 Roof 1st

PASS

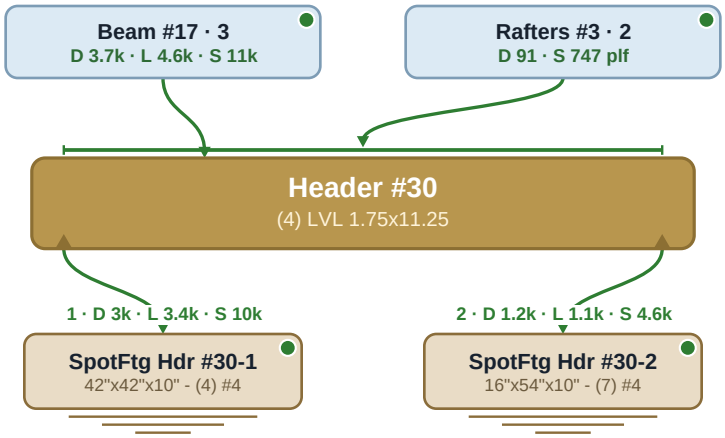

Header #31 | Steel W10X22

ON PLAN: A3 Floor 2nd A4 Roof 1st

PASS

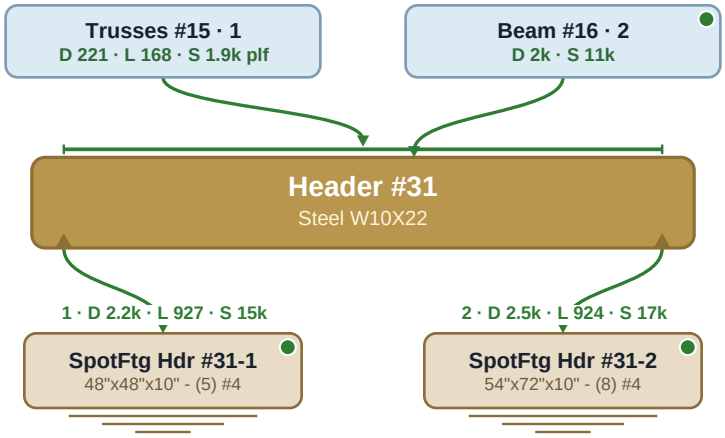

Header #32 | 4x8

ON PLAN: A3 Floor 2nd A4 Roof 1st

PASS

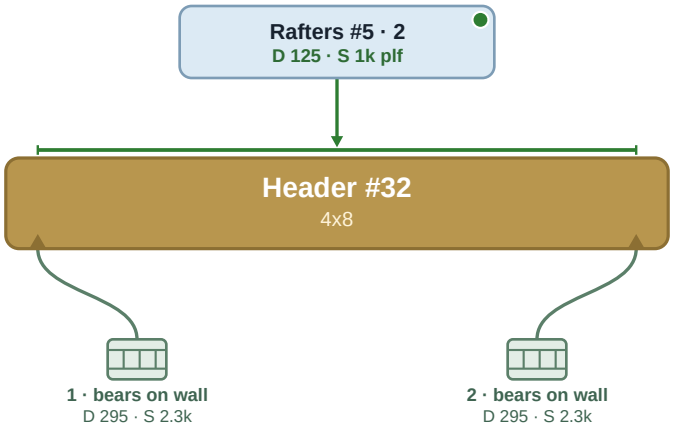

Header #33 | (2) LVL 1.75x9.25

ON PLAN: A3 Floor 2nd A4 Roof 1st

PASS

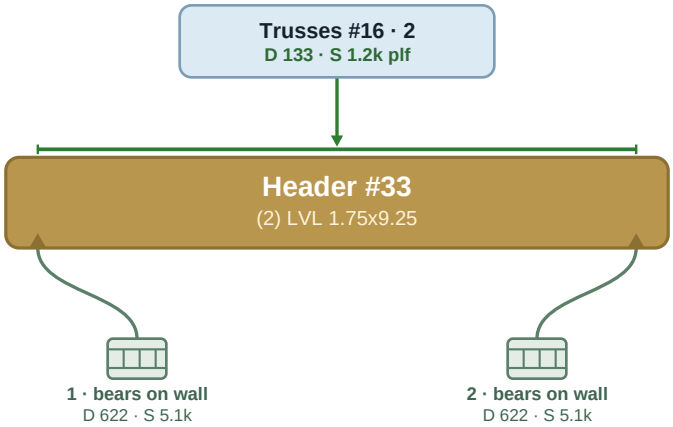

Header #34 | 6x8

ON PLAN: A5 Roof 2nd

PASS

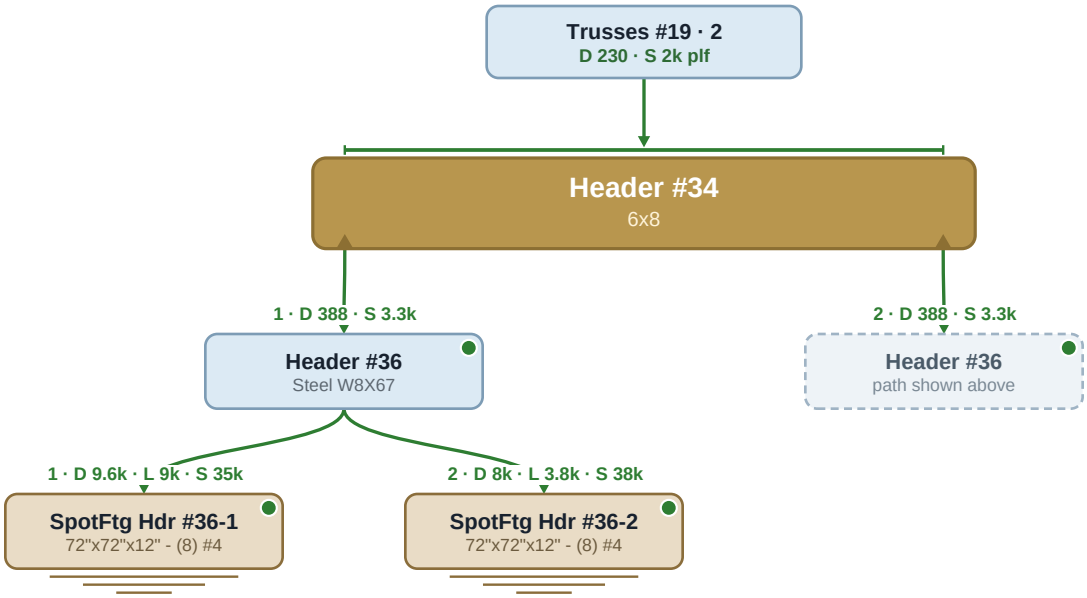

Header #35 | 6x8

ON PLAN: A5 Roof 2nd

PASS

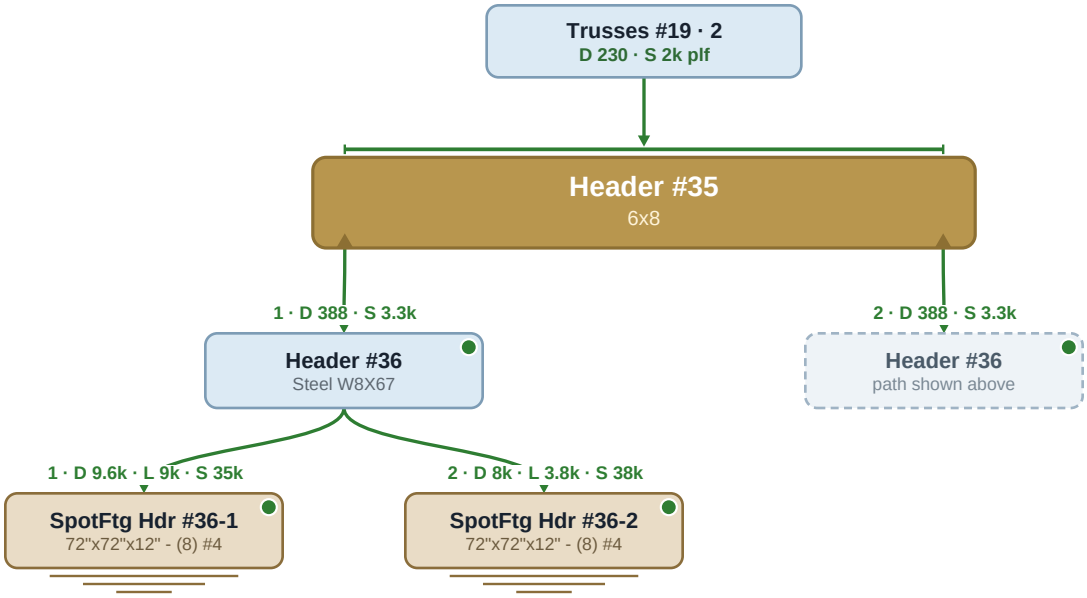

Header #36 | Steel W8X67

ON PLAN: A3 Floor 2nd A4 Roof 1st

PASS

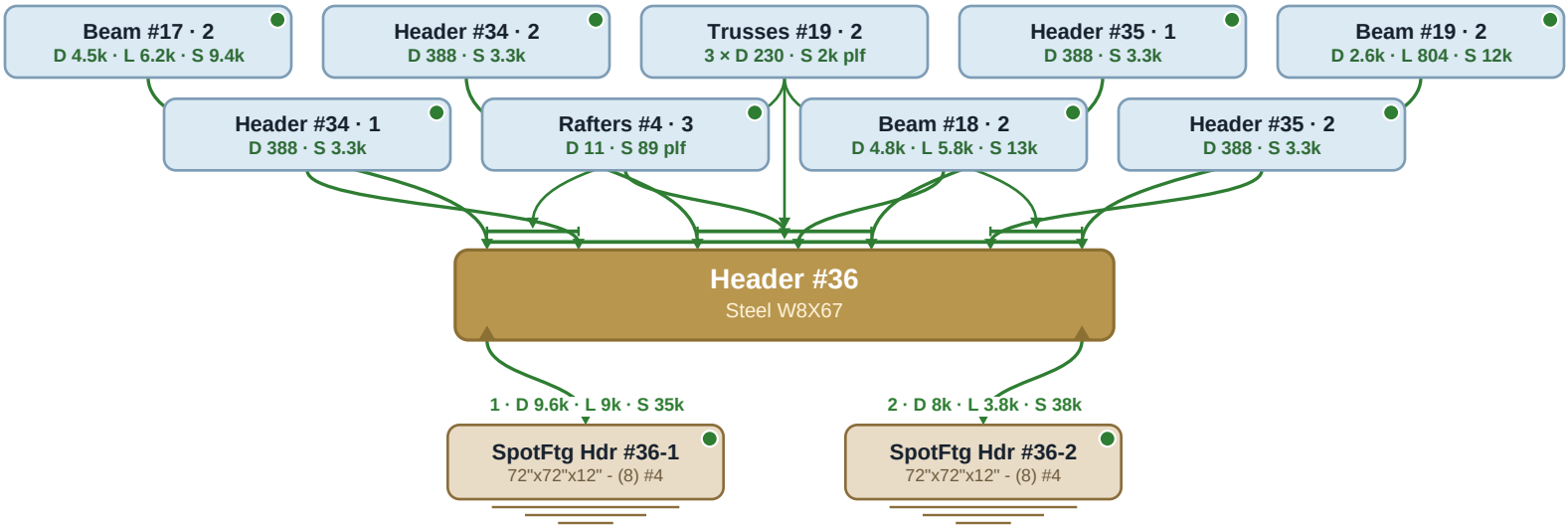

Header #37 | 4x10

ON PLAN: A3 Floor 2nd A4 Roof 1st

PASS

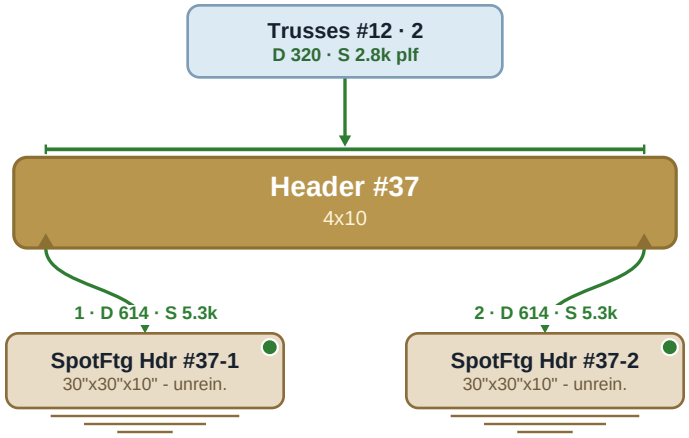

Header #39 | 4x8

ON PLAN: A3 Floor 2nd A4 Roof 1st

PASS

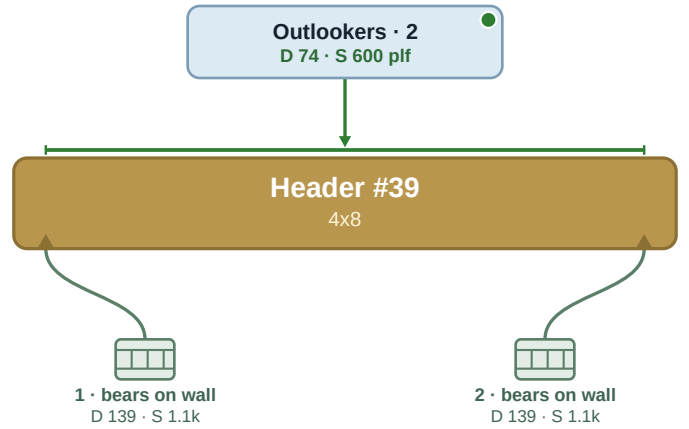

Beam #1

(1) 6 3/4" x 13 1/2" 24F-1.8E 24F-V4 DF/DF Glulam

Level: Roof | Member type: Beam (Roof Beam) | Length: 36' 10" | 2018 IRC | 2018 NDS | ASD

PASSED

Controls: Moment 79% used
Section adequacy 21.5% (capacity to spare)

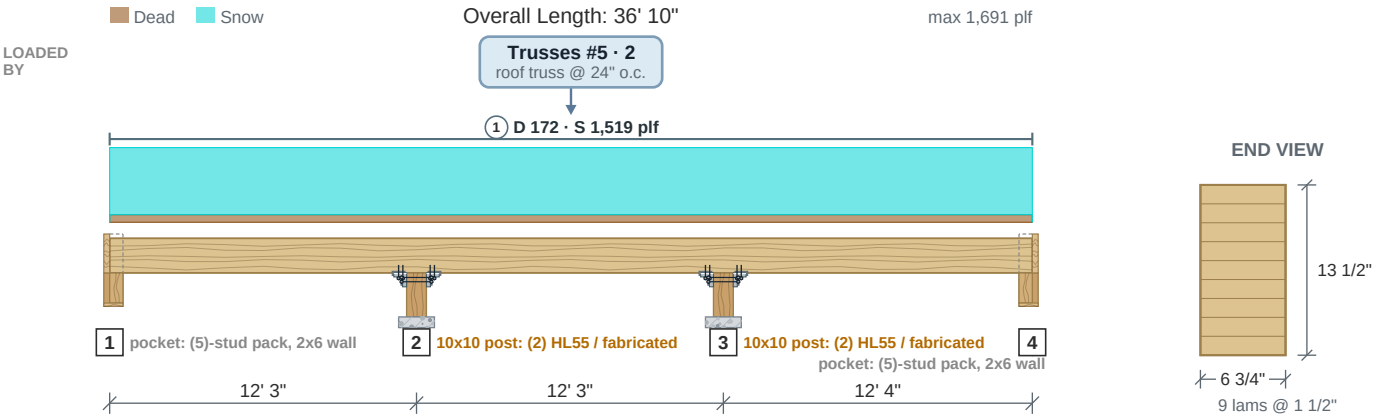

Drawing is conceptual. Locations are measured from the left end of the member; all dimensions are horizontal.

Design Results	Actual @ Location	Allowed	Result	LDF	Load Combination
Member Reaction (lbs)	23,169 @ 24' 6"	41,681 (9 1/2")	Passed (56% used)	--	
Plate Bearing (psi)	228 @ 36' 10"	668 (2x6 wall, DF-L #2)	Passed (34% used)	--	
Shear (lbs)	10,056 @ 26' 1/4"	18,517	Passed (54% used)	1.15	D+S
Neg Moment (Ft-lbs)	-25,945 @ 24' 6"	33,039	Passed (79% used)	1.15	D+S
Live Load Defl. (in)	0.168 @ 31' 6 9/16"	0.617	Passed (L/881)	--	S
Total Load Defl. (in)	0.189 @ 31' 6 9/16"	0.822	Passed (L/781)	--	D+S

- Deflection criteria (IRC Table R301.7): floor live alone L/360; roof live or snow alone L/240; dead plus live L/180.
- Bending adjustment factors: CD = 1.15, CV = 0.909, CL = 0.991 (D+S).
- Beam stability (NDS 3.3.3) governs bending: negative moment 25945 lbf-ft, 12.25-24.50 ft, CL 0.991 (unbraced 12.2 ft).
- Unbalanced glulam layup: install with the tension laminations at the bottom, proper side up as marked by the manufacturer.
- Member self weight of 20.8 plf is included.
- Calculations per NDS 2018, ASD, every load combination with its own load duration factor.

	Bearing Length		Loads to Supports (lbs)			
Supports	**Provided**	**Required**	**Dead**	**Snow**	**Total**	**Load goes to**
1 @ 0	5 1/2"	1 15/16"	946	7,447	**8,392**	SpotFtg Bm #1-1 (in a beam pocket in a 2x6 stud wall 10 ft tall (the default), on a (5)-stud pack -- no post cap)
2 @ 12' 3"	9 1/2" seat	4 7/8"	2,595	20,437	**23,032**	SpotFtg Bm #1-2 (10x10 post (max 10 ft, 65%): (2) HL55 / fabricated)
3 @ 24' 6"	9 1/2" seat	4 15/16"	2,611	20,558	**23,169**	SpotFtg Bm #1-3 (10x10 post (max 10 ft, 65%): (2) HL55 / fabricated)
4 @ 36' 10"	5 1/2"	1 15/16"	952	7,500	**8,452**	SpotFtg Bm #1-4 (in a beam pocket in a 2x6 stud wall 10 ft tall (the default), on a (5)-stud pack -- no post cap)

Total = the governing ASD combination at that support; the category columns are service loads.

Lateral Bracing	Bracing Intervals	Comments
Top Edge (Lu)	continuous	braced by the sheathing
Bottom Edge (Lu)	12' 4" o/c	governs C_L here: the bottom edge is in compression

Vertical Loads	Location	Trib. Width	Dead (0.90)	Snow (1.15)	Comments
0 - Self Weight (PLF)	0 to 36' 10"	N/A	20.8	--	
1 - Uniform (PLF)	0 to 36' 10"	N/A	172.1	1,519	Linked from: Trusses #5, Support 2

Shear, Moment and Deflection

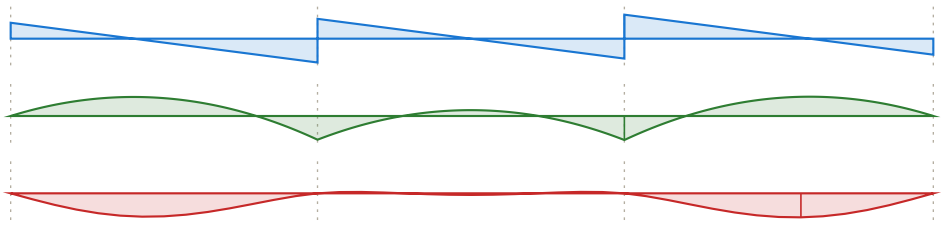

Shear (lbs)
D+S
max 12,659 @ 24' 6"

Moment (ft-lbs)
D+S
max -25,945 @ 24' 6"

Deflection (in)
D+S
0.189 in down @ 31' 6 9/16"
limit 0.822 in on the span

Beam #2

(1) 5 1/2" x 18" 24F-1.8E 24F-V4 DF/DF Glulam

Level: Roof | Member type: Beam (Roof Beam) | Length: 13' 11" | 2018 IRC | 2018 NDS | ASD

PASSED

Controls: Moment 91% used
Section adequacy 8.5% (capacity to spare)

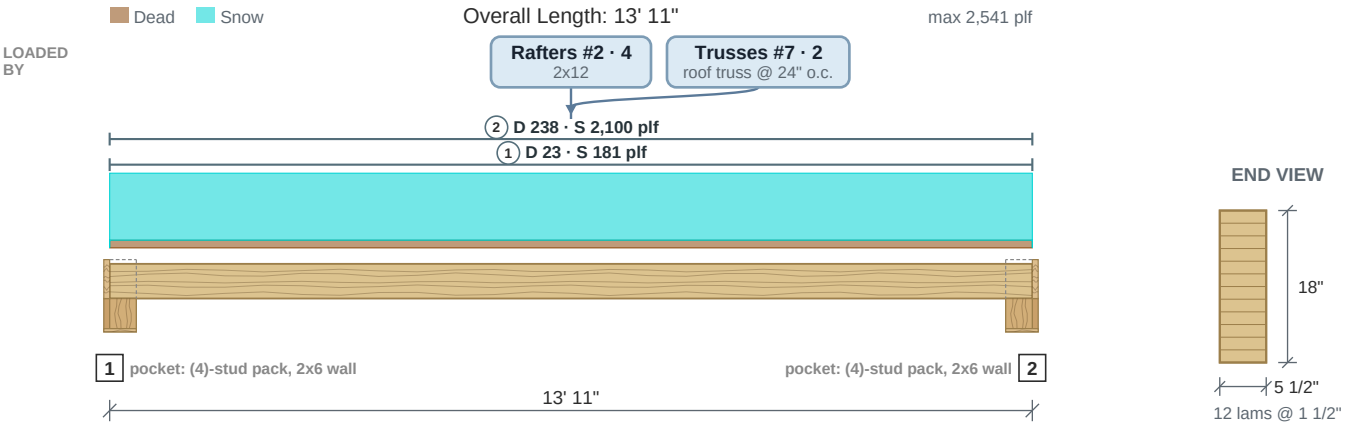

Drawing is conceptual. Locations are measured from the left end of the member; all dimensions are horizontal.

Design Results	Actual @ Location	Allowed	Result	LDF	Load Combination
Member Reaction (lbs)	17,840 @ 0	19,662 (5 1/2")	Passed (91% used)	--	
Plate Bearing (psi)	590 @ 0	668 (2x6 wall, DF-L #2)	Passed (88% used)	--	
Shear (lbs)	13,407 @ 1' 8 3/4"	20,117	Passed (67% used)	1.15	D+S
Moment (Ft-lbs)	62,071 @ 6' 11 1/2"	67,869	Passed (91% used)	1.15	D+S
Live Load Defl. (in)	0.4 @ 6' 11 1/2"	0.696	Passed (L/417)	--	S
Total Load Defl. (in)	0.45 @ 6' 11 1/2"	0.928	Passed (L/371)	--	D+S

- Deflection criteria (IRC Table R301.7): floor live alone L/480; roof live or snow alone L/240; dead plus live L/180.
- Bending adjustment factors: CD = 1.15, CV = 0.994, CL = 1.00 (D+S).
- Beam stability: each moment checked against the bracing of its compression edge (CL = 1.00 where braced).
- Unbalanced glulam layup: install with the tension laminations at the bottom, proper side up as marked by the manufacturer.
- Member self weight of 22.5 plf is included.
- Calculations per NDS 2018, ASD, every load combination with its own load duration factor.

	Bearing Length		Loads to Supports (lbs)			
Supports	Provided	Required	Dead	Snow	Total	Load goes to
1 @ 0	5 1/2"	5"	1,971	15,869	**17,840**	SpotFtg Bm #2-1 (in a beam pocket in a 2x6 stud wall 10 ft tall (the default), on a (4)-stud pack -- no post cap)
2 @ 13' 11"	5 1/2"	5"	1,971	15,869	**17,840**	SpotFtg Bm #2-2 (in a beam pocket in a 2x6 stud wall 10 ft tall (the default), on a (4)-stud pack -- no post cap)

Total = the governing ASD combination at that support; the category columns are service loads.

Lateral Bracing	Bracing Intervals	Comments
Top Edge (Lu)	continuous	braced by the sheathing
Bottom Edge (Lu)	13' 11" o/c	used for C_L only where the bottom edge is in compression

Vertical Loads	Location	Trib. Width	Dead (0.90)	Snow (1.15)	Comments
0 - Self Weight (PLF)	0 to 13' 11"	N/A	22.5	--	
1 - Uniform (PLF)	0 to 13' 11"	N/A	22.8	180.5	Linked from: Rafters #2, Support 4
2 - Uniform (PLF)	0 to 13' 11"	N/A	238	2,100	Linked from: Trusses #7, Support 2

Shear, Moment and Deflection

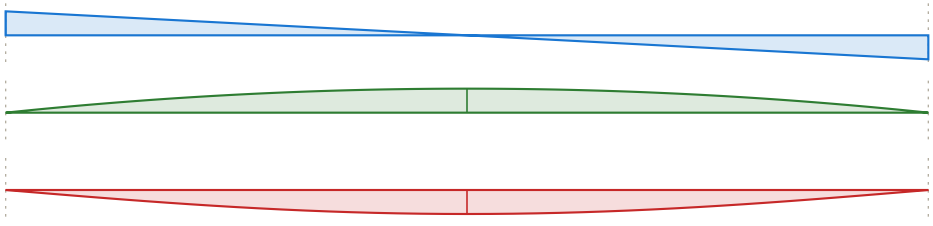

Shear (lbs)
D+S
max 17,840 @ 0

Moment (ft-lbs)
D+S
max 62,071 @ 6' 11 1/2"

Deflection (in)
D+S
0.45 in down @ 6' 11 1/2"
limit 0.928 in on the span

Beam #3

(1) 5 1/2" x 10 1/2" 24F-1.8E 24F-V4 DF/DF Glulam

Level: Roof | Member type: Beam (Roof Beam) | Length: 13' 6" | 2018 IRC | 2018 NDS | ASD

PASSED

Controls: Deflection 98% used
Section adequacy 2.2% (capacity to spare)

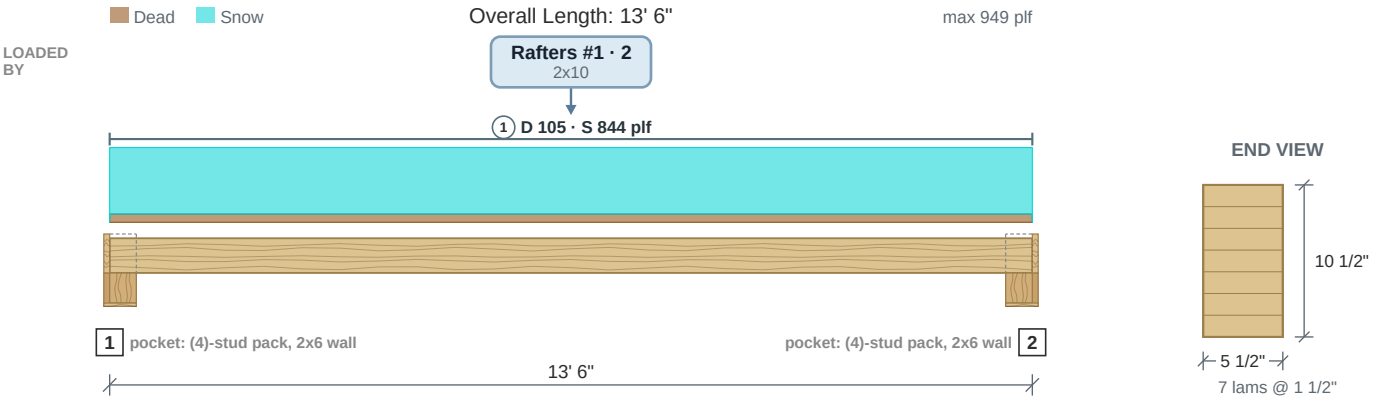

Drawing is conceptual. Locations are measured from the left end of the member; all dimensions are horizontal.

Design Results	Actual @ Location	Allowed	Result	LDF	Load Combination
Member Reaction (lbs)	6,492 @ 0	19,662 (5 1/2")	Passed (33% used)	--	
Plate Bearing (psi)	215 @ 0	668 (2x6 wall, DF-L #2)	Passed (32% used)	--	
Shear (lbs)	5,430 @ 12' 4 3/4"	11,735	Passed (46% used)	1.15	D+S
Moment (Ft-lbs)	21,910 @ 6' 9"	23,244	Passed (94% used)	1.15	D+S
Live Load Defl. (in)	0.66 @ 6' 9"	0.675	Passed (L/245)	--	S
Total Load Defl. (in)	0.753 @ 6' 9"	0.9	Passed (L/215)	--	D+S

- Deflection criteria (IRC Table R301.7): floor live alone L/360; roof live or snow alone L/240; dead plus live L/180.
- Bending adjustment factors: CD = 1.15, CL = 1.00 (D+S).
- Beam stability: each moment checked against the bracing of its compression edge (CL = 1.00 where braced).
- Unbalanced glulam layup: install with the tension laminations at the bottom, proper side up as marked by the manufacturer.
- Member self weight of 13.2 plf is included.
- Calculations per NDS 2018, ASD, every load combination with its own load duration factor.

	Bearing Length		Loads to Supports (lbs)			
Supports	**Provided**	**Required**	**Dead**	**Snow**	**Total**	**Load goes to**
1 @ 0	5 1/2"	1 13/16"	796	5,695	**6,492**	SpotFtg Bm #3-1 (in a beam pocket in a 2x6 stud wall 10 ft tall (the default), on a (4)-stud pack -- no post cap)
2 @ 13' 6"	5 1/2"	1 13/16"	796	5,695	**6,492**	SpotFtg Bm #3-2 (in a beam pocket in a 2x6 stud wall 10 ft tall (the default), on a (4)-stud pack -- no post cap)

Total = the governing ASD combination at that support; the category columns are service loads.

Lateral Bracing	Bracing Intervals	Comments
Top Edge (Lu)	continuous	braced by the sheathing
Bottom Edge (Lu)	13' 6" o/c	used for C_L only where the bottom edge is in compression

Vertical Loads	Location	Trib. Width	Dead (0.90)	Snow (1.15)	Comments
0 - Self Weight (PLF)	0 to 13' 6"	N/A	13.2	--	
1 - Uniform (PLF)	0 to 13' 6"	N/A	104.8	843.8	Linked from: Rafters #1, Support 2

Shear, Moment and Deflection

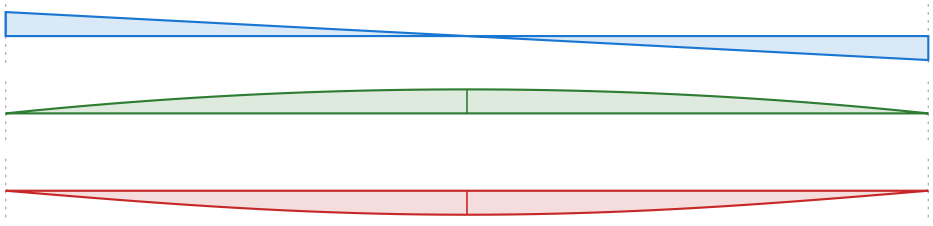

Shear (lbs)
D+S
max 6,492 @ 0

Moment (ft-lbs)
D+S
max 21,910 @ 6' 9"

Deflection (in)
D+S
0.753 in down @ 6' 9"
limit 0.9 in on the span

Beam #4

(1) 5 1/2" x 10 1/2" 24F-1.8E 24F-V4 DF/DF Glulam

Level: Roof | Member type: Beam (Roof Beam) | Length: 14' | 2018 IRC | 2018 NDS | ASD

PASSED

Controls: Deflection 97% used
Section adequacy 3% (capacity to spare)

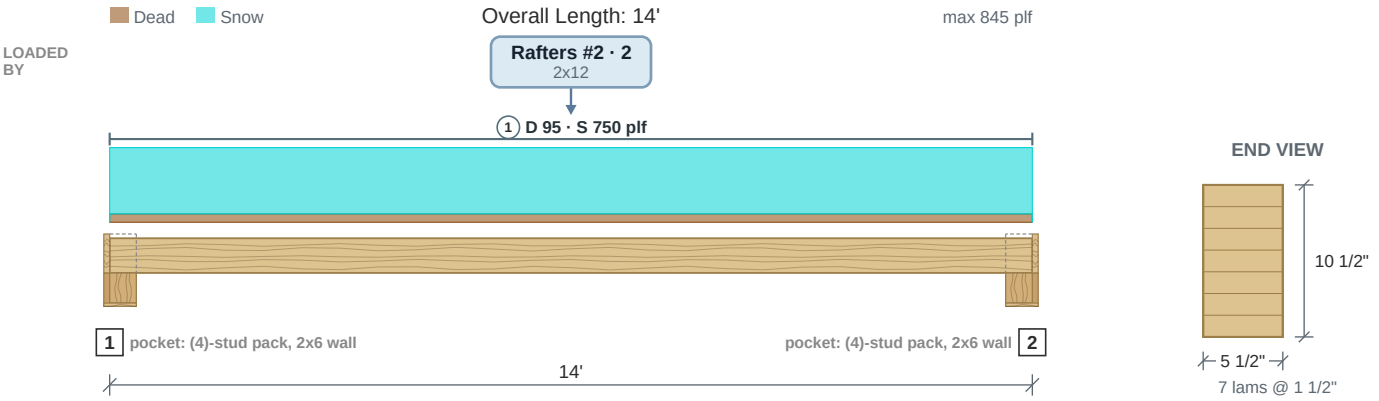

Drawing is conceptual. Locations are measured from the left end of the member; all dimensions are horizontal.

Design Results	Actual @ Location	Allowed	Result	LDF	Load Combination
Member Reaction (lbs)	6,008 @ 0	19,662 (5 1/2")	Passed (31% used)	--	
Plate Bearing (psi)	199 @ 0	668 (2x6 wall, DF-L #2)	Passed (30% used)	--	
Shear (lbs)	5,060 @ 12' 10 3/4"	11,735	Passed (43% used)	1.15	D+S
Moment (Ft-lbs)	21,027 @ 7'	23,244	Passed (90% used)	1.15	D+S
Live Load Defl. (in)	0.679 @ 7'	0.7	Passed (L/247)	--	S
Total Load Defl. (in)	0.777 @ 7'	0.933	Passed (L/216)	--	D+S

- Deflection criteria (IRC Table R301.7): floor live alone L/360; roof live or snow alone L/240; dead plus live L/180.
- Bending adjustment factors: CD = 1.15, CL = 1.00 (D+S).
- Beam stability: each moment checked against the bracing of its compression edge (CL = 1.00 where braced).
- Unbalanced glulam layup: install with the tension laminations at the bottom, proper side up as marked by the manufacturer.
- Member self weight of 13.2 plf is included.
- Calculations per NDS 2018, ASD, every load combination with its own load duration factor.

	Bearing Length		Loads to Supports (lbs)			
Supports	**Provided**	**Required**	**Dead**	**Snow**	**Total**	**Load goes to**
1 @ 0	5 1/2"	1 11/16"	755	5,253	**6,008**	SpotFtg Bm #4-1 (in a beam pocket in a 2x6 stud wall 10 ft tall (the default), on a (4)-stud pack -- no post cap)
2 @ 14'	5 1/2"	1 11/16"	755	5,253	**6,008**	SpotFtg Bm #4-2 (in a beam pocket in a 2x6 stud wall 10 ft tall (the default), on a (4)-stud pack -- no post cap)

Total = the governing ASD combination at that support; the category columns are service loads.

Lateral Bracing	Bracing Intervals	Comments
Top Edge (Lu)	continuous	braced by the sheathing
Bottom Edge (Lu)	14' o/c	used for C_L only where the bottom edge is in compression

Vertical Loads	Location	Trib. Width	Dead (0.90)	Snow (1.15)	Comments
0 - Self Weight (PLF)	0 to 14'	N/A	13.2	--	
1 - Uniform (PLF)	0 to 14'	N/A	94.7	750.4	Linked from: Rafters #2, Support 2

Shear, Moment and Deflection

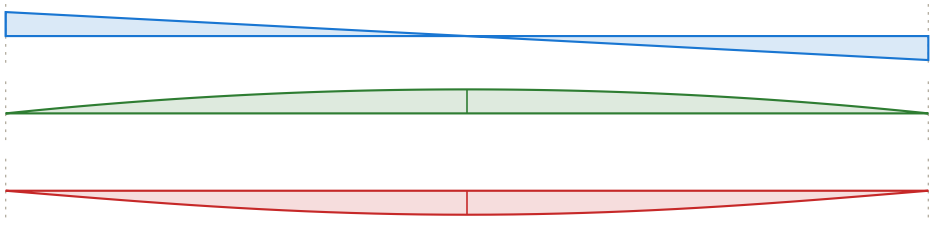

Shear (lbs)
D+S
max 6,008 @ 0

Moment (ft-lbs)
D+S
max 21,027 @ 7'

Deflection (in)
D+S
0.777 in down @ 7'
limit 0.933 in on the span

Beam #5

(1) 6 3/4" x 13 1/2" 24F-1.8E 24F-V4 DF/DF Glulam

Level: Roof | Member type: Beam (Roof Beam) | Length: 23' | 2018 IRC | 2018 NDS | ASD

PASSED

Controls: Moment 25% used
Section adequacy 74.9% (capacity to spare)

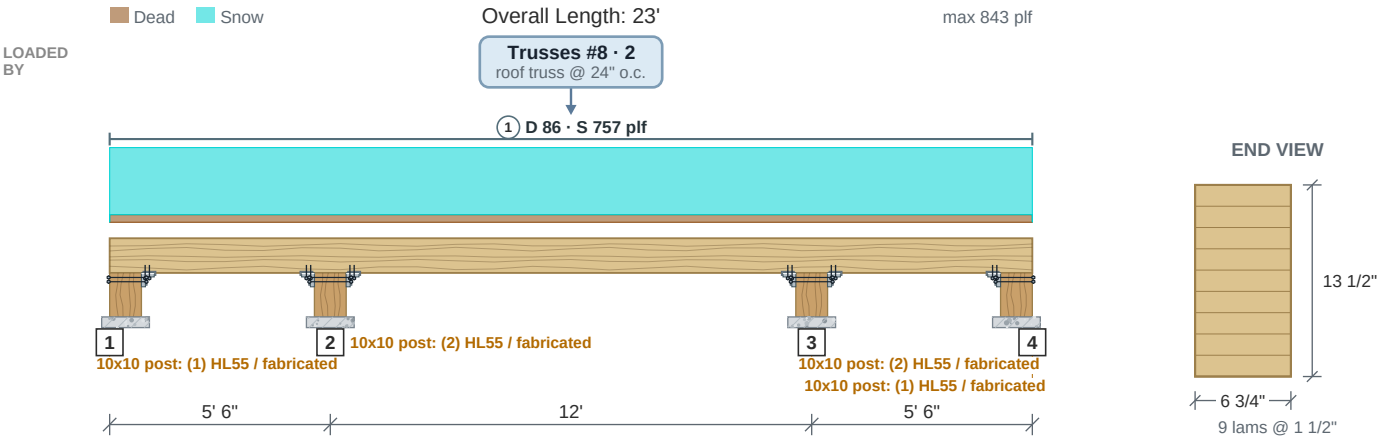

Drawing is conceptual. Locations are measured from the left end of the member; all dimensions are horizontal.

Design Results	Actual @ Location	Allowed	Result	LDF	Load Combination
Member Reaction (lbs)	9,142 @ 5' 6"	41,681 (9 1/2")	Passed (22% used)	--	
Shear (lbs)	3,870 @ 15' 11 3/4"	18,517	Passed (21% used)	1.15	D+S
Neg Moment (Ft-lbs)	-8,705 @ 5' 6"	34,631	Passed (25% used)	1.15	D+S
Live Load Defl. (in)	0.046 @ 11' 9 7/16"	0.6	Passed (L/3,104)	--	S
Total Load Defl. (in)	0.053 @ 11' 9 7/16"	0.8	Passed (L/2,721)	--	D+S

- Deflection criteria (IRC Table R301.7): floor live alone L/360; roof live or snow alone L/240; dead plus live L/180.
- Bending adjustment factors: CD = 1.15, CV = 0.953, CL = 0.996 (D+S).
- Beam stability (NDS 3.3.3) governs bending: negative moment 8706 lbf-ft, 0.00-5.50 ft, CL 0.996 (unbraced 5.5 ft).
- Unbalanced glulam layup: install with the tension laminations at the bottom, proper side up as marked by the manufacturer.
- Member self weight of 20.8 plf is included.
- Calculations per NDS 2018, ASD, every load combination with its own load duration factor.

	Bearing Length		Loads to Supports (lbs)			
Supports	**Provided**	**Required**	**Dead**	**Snow**	**Total**	**Load goes to**
1 @ 0	9 1/2" seat	3/16"	98	695	**793**	SpotFtg Bm #5-1 (10x10 post (max 10 ft, 98%): (1) HL55 / fabricated)
2 @ 5' 6"	9 1/2" seat	1 11/16"	1,128	8,015	**9,142**	SpotFtg Bm #5-2 (10x10 post (max 10 ft, 86%): (2) HL55 / fabricated)
3 @ 17' 6"	9 1/2" seat	1 11/16"	1,128	8,015	**9,142**	SpotFtg Bm #5-3 (10x10 post (max 10 ft, 86%): (2) HL55 / fabricated)
4 @ 23'	9 1/2" seat	3/16"	98	695	**793**	SpotFtg Bm #5-4 (10x10 post (max 10 ft, 98%): (1) HL55 / fabricated)

Total = the governing ASD combination at that support; the category columns are service loads.

Lateral Bracing	Bracing Intervals	Comments
Top Edge (Lu)	continuous	braced by the sheathing
Bottom Edge (Lu)	12' o/c	governs C_L here: the bottom edge is in compression

Vertical Loads	Location	Trib. Width	Dead (0.90)	Snow (1.15)	Comments
0 - Self Weight (PLF)	0 to 23'	N/A	20.8	--	
1 - Uniform (PLF)	0 to 23'	N/A	85.8	757.4	Linked from: Trusses #8, Support 2

Shear, Moment and Deflection

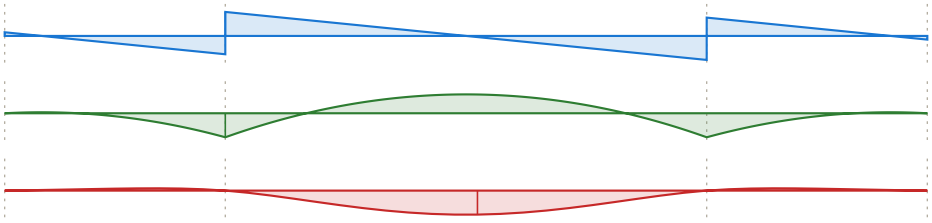

Shear (lbs)
D+S
max 5,184 @ 5' 6"

Moment (ft-lbs)
D+S
max -8,706 @ 5' 6"

Deflection (in)
D+S
0.053 in down @ 11' 9 7/16"
limit 0.8 in on the span

Beam #6

(3) 1 3/4" x 11 1/4" 2.0E Microlam LVL (Weyerhaeuser)

Level: Roof | Member type: Beam (Roof Beam) | Length: 9' | 2018 IRC | 2018 NDS | ASD

PASSED

Controls: Moment 70% used
Section adequacy 29.6% (capacity to spare)

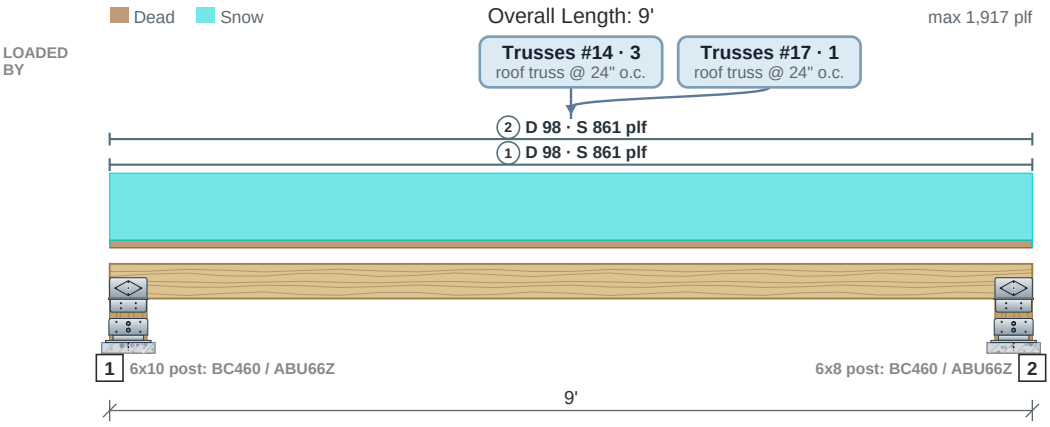

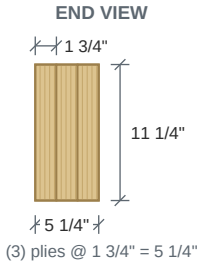

Drawing is conceptual. Locations are measured from the left end of the member; all dimensions are horizontal.

Design Results	Actual @ Location	Allowed	Result	LDF	Load Combination
Member Reaction (lbs)	8,704 @ 0	21,656 (5 1/2")	Passed (40% used)	--	
Shear (lbs)	6,448 @ 7' 10"	12,907	Passed (50% used)	1.15	D+S
Moment (Ft-lbs)	19,584 @ 4' 6"	27,837	Passed (70% used)	1.15	D+S
Live Load Defl. (in)	0.238 @ 4' 6"	0.45	Passed (L/454)	--	S
Total Load Defl. (in)	0.267 @ 4' 6"	0.6	Passed (L/404)	--	D+S

- Deflection criteria (IRC Table R301.7): floor live alone L/360; roof live or snow alone L/240; dead plus live L/180.
- Bending adjustment factors: CD = 1.15, CV = 1.009, CL = 1.00 (D+S).
- Beam stability: each moment checked against the bracing of its compression edge (CL = 1.00 where braced).
- Member self weight of 17.2 plf is included.
- Calculations per NDS 2018 and Weyerhaeuser ICC-ES ESR-1387, ASD, every load combination with its own load duration factor.

	Bearing Length		Loads to Supports (lbs)			
Supports	**Provided**	**Required**	**Dead**	**Snow**	**Total**	**Load goes to**
1 @ 0	5 1/2" seat	2 3/16"	956	7,748	**8,704**	Column Bm #6-1 (6x10 post (max 20.5 ft, 54%): BC460 / ABU66Z)
2 @ 9'	5 1/2" seat	2 3/16"	956	7,748	**8,704**	Column Bm #6-2 (6x8 post (max 20.5 ft, 29%): BC460 / ABU66Z)

Total = the governing ASD combination at that support; the category columns are service loads.

Lateral Bracing	Bracing Intervals	Comments
Top Edge (Lu)	continuous	braced by the sheathing
Bottom Edge (Lu)	9' o/c	used for C_L only where the bottom edge is in compression

Vertical Loads	Location	Trib. Width	Dead (0.90)	Snow (1.15)	Comments
0 - Self Weight (PLF)	0 to 9'	N/A	17.2	--	
1 - Uniform (PLF)	0 to 9'	N/A	97.6	860.9	Linked from: Trusses #14, Support 3
2 - Uniform (PLF)	0 to 9'	N/A	97.6	860.9	Linked from: Trusses #17, Support 1

Shear, Moment and Deflection

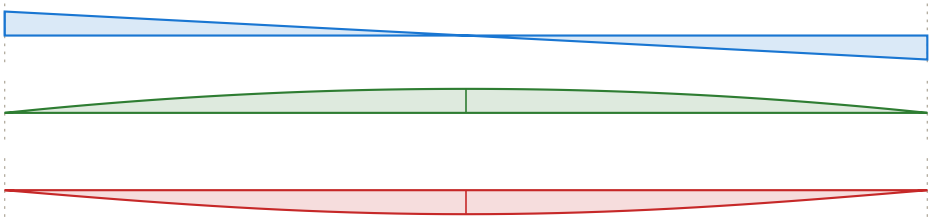

Shear (lbs)
D+S
max 8,704 @ 0

Moment (ft-lbs)
D+S
max 19,584 @ 4' 6"

Deflection (in)
D+S
0.229 in down @ 4' 6"
limit 0.6 in on the span

Beam #7

(2) 1 3/4" x 11 1/4" 2.0E Microlam LVL (Weyerhaeuser)

Level: Floor - 2nd Level | Member type: Beam (Roof Beam) | Length: 22' 9" | 2018 IRC | 2018 NDS | ASD

PASSED

Controls: Moment 93% used

Section adequacy 6.9% (capacity to spare)

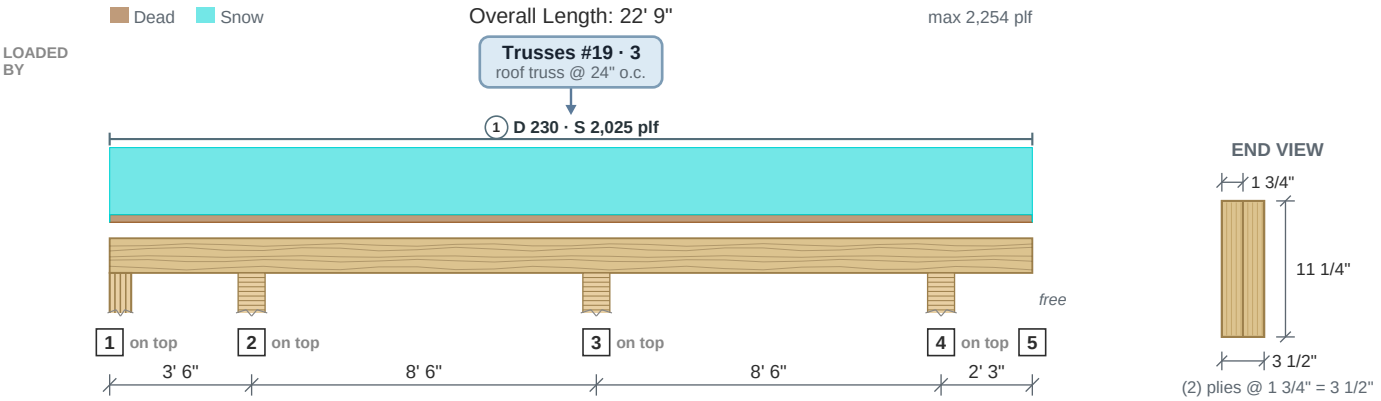

Drawing is conceptual. Locations are measured from the left end of the member; all dimensions are horizontal.

Design Results	Actual @ Location	Allowed	Result	LDF	Load Combination
Member Reaction (lbs)	21,366 @ 12'	22,969 (8 3/4")	Passed (93% used)	--	
Shear (lbs)	7,961 @ 13' 3 5/8"	8,605	Passed (93% used)	1.15	D+S
Neg Moment (Ft-lbs)	-16,626 @ 12'	17,864	Passed (93% used)	1.15	D+S
Live Load Defl. (in)	0.078 @ 22' 9"	0.225	Passed (2L/696)	--	S
Total Load Defl. (in)	0.087 @ 22' 9"	0.3	Passed (2L/622)	--	D+S

- Deflection criteria (IRC Table R301.7): floor live alone L/480; roof live or snow alone L/240; dead plus live L/180.
- Overhang deflection criteria: LL (2L/480) and TL (2L/180) -- a cantilever is limited on twice its length.
- Bending adjustment factors: CD = 1.15, CV = 1.009, CL = 0.963 (D+S).
- Beam stability (NDS 3.3.3) governs bending: negative moment 16626 lbf-ft, 3.50-12.00 ft, CL 0.963 (unbraced 8.5 ft).
- Member self weight of 11.5 plf is included.
- Calculations per NDS 2018 and Weyerhaeuser ICC-ES ESR-1387, ASD, every load combination with its own load duration factor.

	Bearing Length		Loads to Supports (lbs)			
Supports	**Provided**	**Required**	**Dead**	**Snow**	**Total**	**Load goes to**
1 @ 0	7"	7/16"	129	1,088	**1,217**	Beam #8 (bears on top)
2 @ 3' 6"	8 3/4"	5 9/16"	1,651	13,870	**15,520**	Beam #17 (bears on top)
3 @ 12'	8 3/4"	8 1/8"	2,272	19,094	**21,366**	Beam #18 (bears on top)
4 @ 20' 6"	8 3/4"	4 3/4"	1,430	12,018	**13,448**	Beam #19 (bears on top)
5 @ 22' 9"	--	--	--	--	--	free end (cantilever tip)

Total = the governing ASD combination at that support; the category columns are service loads.

Lateral Bracing	Bracing Intervals	Comments
Top Edge (Lu)	continuous	braced by the sheathing
Bottom Edge (Lu)	8' 6" o/c	governs C_L here: the bottom edge is in compression

Vertical Loads	Location	Trib. Width	Dead (0.90)	Snow (1.15)	Comments
0 - Self Weight (PLF)	0 to 22' 9"	N/A	11.5	--	
1 - Uniform (PLF)	0 to 22' 9"	N/A	229.5	2,025	Linked from: Trusses #19, Support 3

Shear, Moment and Deflection

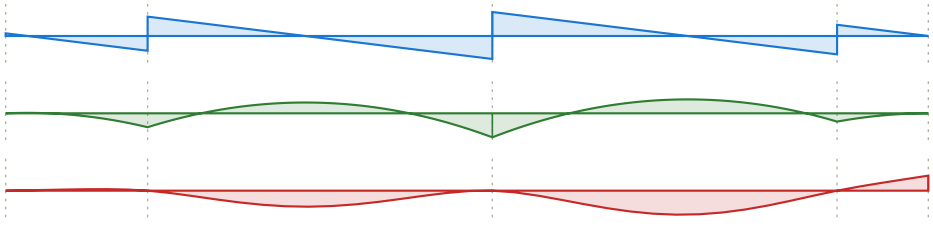

Shear (lbs)
D+S
max 10,912 @ 12'

Moment (ft-lbs)
D+S
max -16,626 @ 12'

Deflection (in)
D+S
0.07 in up @ 22' 9"
limit 0.3 in on 2L (cantilever)

Beam #8

(4) 1 3/4" x 18" 2.0E Microlam LVL (Weyerhaeuser)

Level: Floor - 2nd Level | Member type: Beam (Roof Beam) | Length: 26' | 2018 IRC | 2018 NDS | ASD

PASSED

Controls: Deflection 73% used
Section adequacy 27.1% (capacity to spare)

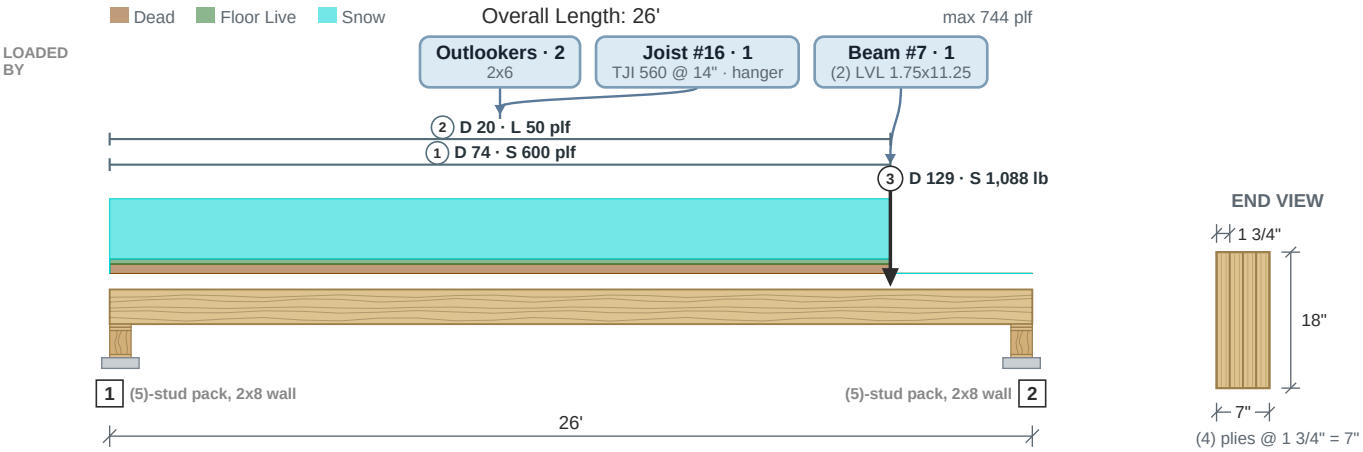

Drawing is conceptual. Locations are measured from the left end of the member; all dimensions are horizontal.

Design Results	Actual @ Location	Allowed	Result	LDF	Load Combination
Member Reaction (lbs)	9,472 @ 0	38,062 (7 1/4")	Passed (25% used)	--	
Plate Bearing (psi)	187 @ 0	625 (2x8 wall, DF-L #2)	Passed (30% used)	--	
Shear (lbs)	8,155 @ 1' 9 5/8"	27,535	Passed (30% used)	1.15	D+S
Moment (Ft-lbs)	61,397 @ 13'	89,132	Passed (69% used)	1.15	D+S
Live Load Defl. (in)	0.947 @ 12' 11 5/16"	1.3	Passed (L/329)	--	S
Total Load Defl. (in)	1.152 @ 12' 11 5/16"	1.733	Passed (L/271)	--	D+S

- Deflection criteria (IRC Table R301.7): floor live alone L/360; roof live or snow alone L/240; dead plus live L/180.
- Bending adjustment factors: CD = 1.15, CV = 0.946, CL = 1.00 (D+S).
- Beam stability: each moment checked against the bracing of its compression edge (CL = 1.00 where braced).
- Member self weight of 36.8 plf is included.
- Calculations per NDS 2018 and Weyerhaeuser ICC-ES ESR-1387, ASD, every load combination with its own load duration factor.

	Bearing Length		Loads to Supports (lbs)				
Supports	**Provided**	**Required**	**Dead**	**Floor Live**	**Snow**	**Total**	**Load goes to**
1 @ 0	7 1/4"	1 13/16"	1,689	635	7,783	**9,472**	SpotFtg Hdr #31-2 (in a 2x8 stud wall 10 ft tall (the default), on a (5)-stud pack -- no post cap)
2 @ 26'	7 1/4"	1 1/2"	1,461	465	6,505	**7,966**	SpotFtg Bm #10-2 (in a 2x8 stud wall 10 ft tall (the default), on a (5)-stud pack -- no post cap)

Total = the governing ASD combination at that support; the category columns are service loads.

Lateral Bracing	Bracing Intervals	Comments
Top Edge (Lu)	continuous	braced by the sheathing
Bottom Edge (Lu)	26' o/c	used for C_L only where the bottom edge is in compression

Vertical Loads	Location	Trib. Width	Dead (0.90)	Floor Live (1.00)	Snow (1.15)	Comments
0 - Self Weight (PLF)	0 to 26'	N/A	36.8	--	--	
1 - Uniform (PLF)	0 to 22'	N/A	73.6	--	600	Linked from: Outlookers, Support 2
2 - Uniform (PLF)	0 to 22'	N/A	20.2	50	--	Linked from: Joist #16, Support 1
3 - Point (lb)	22'	N/A	129.4	--	1,088	Linked from: Beam #7, Support 1

Shear, Moment and Deflection

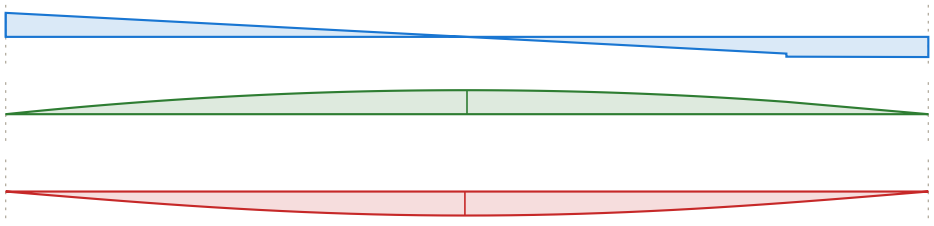

Shear (lbs)
D+S
max 9,472 @ 0

Moment (ft-lbs)
D+S
max 61,397 @ 13'

Deflection (in)
D+S
1.096 in down @ 12' 11 5/16"
limit 1.733 in on the span

Beam #9

(1) 6 3/4" x 16" 24F-1.8E 24F-V4 DF/DF Glulam

Level: Roof | Member type: Beam (Roof Beam) | Length: 30' | 2018 IRC | 2018 NDS | ASD

PASSED

Controls: Moment 92% used
Section adequacy 7.8% (capacity to spare)

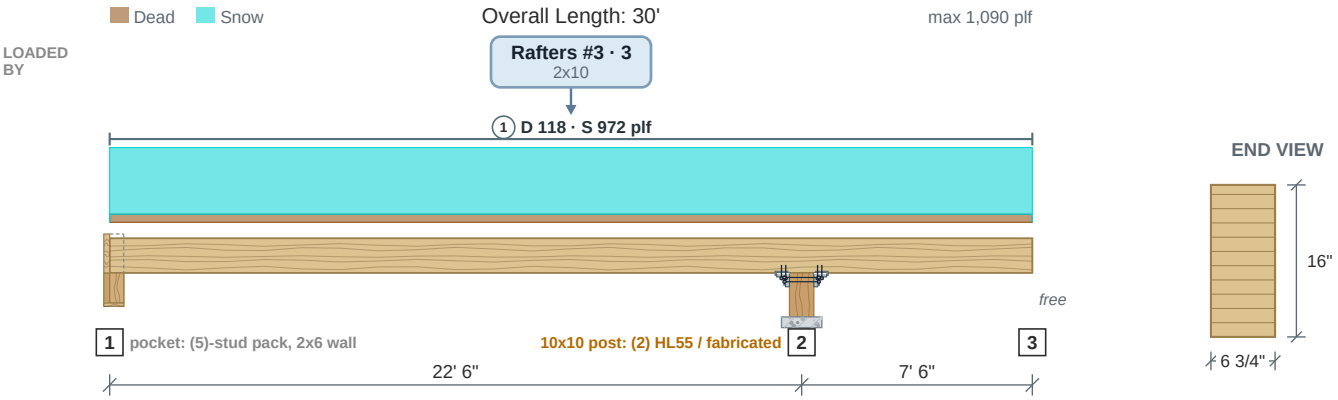

Drawing is conceptual. Locations are measured from the left end of the member; all dimensions are horizontal.

Design Results	Actual @ Location	Allowed	Result	LDF	Load Combination
Member Reaction (lbs)	22,286 @ 22' 6"	41,681 (9 1/2")	Passed (53% used)	--	
Plate Bearing (psi)	300 @ 0	668 (2x6 wall, DF-L #2)	Passed (45% used)	--	
Shear (lbs)	12,002 @ 20' 9 1/4"	21,946	Passed (55% used)	1.15	D+S
Moment (Ft-lbs)	55,714 @ 10' 5/8"	60,420	Passed (92% used)	1.15	D+S
Live Load Defl. (in)	0.993 @ 10' 6"	1.125	Passed (L/272)	--	S
Total Load Defl. (in)	1.139 @ 10' 6"	1.5	Passed (L/237)	--	D+S

- Deflection criteria (IRC Table R301.7): floor live alone L/360; roof live or snow alone L/240; dead plus live L/180.
- Overhang deflection criteria: LL (2L/360) and TL (2L/180) -- a cantilever is limited on twice its length.
- Bending adjustment factors: CD = 1.15, CV = 0.912, CL = 1.00 (D+S).
- Beam stability: each moment checked against the bracing of its compression edge (CL = 1.00 where braced).
- Unbalanced glulam layup: install with the tension laminations at the bottom, proper side up as marked by the manufacturer.
- Member self weight of 24.6 plf is included.
- Calculations per NDS 2018, ASD, every load combination with its own load duration factor.

	Bearing Length		Loads to Supports (lbs)			
Supports	**Provided**	**Required**	**Dead**	**Snow**	**Total**	**Load goes to**
1 @ 0	5 1/2"	2 9/16"	1,426	9,717	**11,143**	SpotFtg Bm #9-1 (in a beam pocket in a 2x6 stud wall 10 ft tall, on a (5)-stud pack -- no post cap)
2 @ 22' 6"	9 1/2" seat	4 11/16"	2,852	19,434	**22,286**	SpotFtg Bm #9-2 (10x10 post (max 10 ft, 66%): (2) HL55 / fabricated)
3 @ 30'	--	--	--	--	--	free end (cantilever tip)

Total = the governing ASD combination at that support; the category columns are service loads.

Lateral Bracing	Bracing Intervals	Comments
Top Edge (Lu)	continuous	braced by the sheathing
Bottom Edge (Lu)	22' 6" o/c	used for C_L only where the bottom edge is in compression

Vertical Loads	Location	Trib. Width	Dead (0.90)	Snow (1.15)	Comments
0 - Self Weight (PLF)	0 to 30'	N/A	24.6	--	
1 - Uniform (PLF)	0 to 30'	N/A	118	971.7	Linked from: Rafters #3, Support 3

Shear, Moment and Deflection

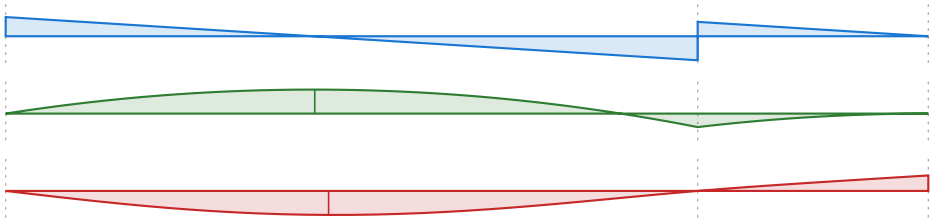

Shear (lbs)
D+S
max -13,929 @ 22' 6"

Moment (ft-lbs)
D+S
max 55,713 @ 10' 5/8"

Deflection (in)
D+S
1.139 in down @ 10' 6"
limit 1.5 in on the span

Beam #10

(1) 5 1/2" x 21" 24F-1.8E 24F-V4 DF/DF Glulam

Level: Roof | Member type: Beam (Roof Beam) | Length: 13' | 2018 IRC | 2018 NDS | ASD

PASSED

Controls: Bearing 80% used
Section adequacy 20.3% (capacity to spare)

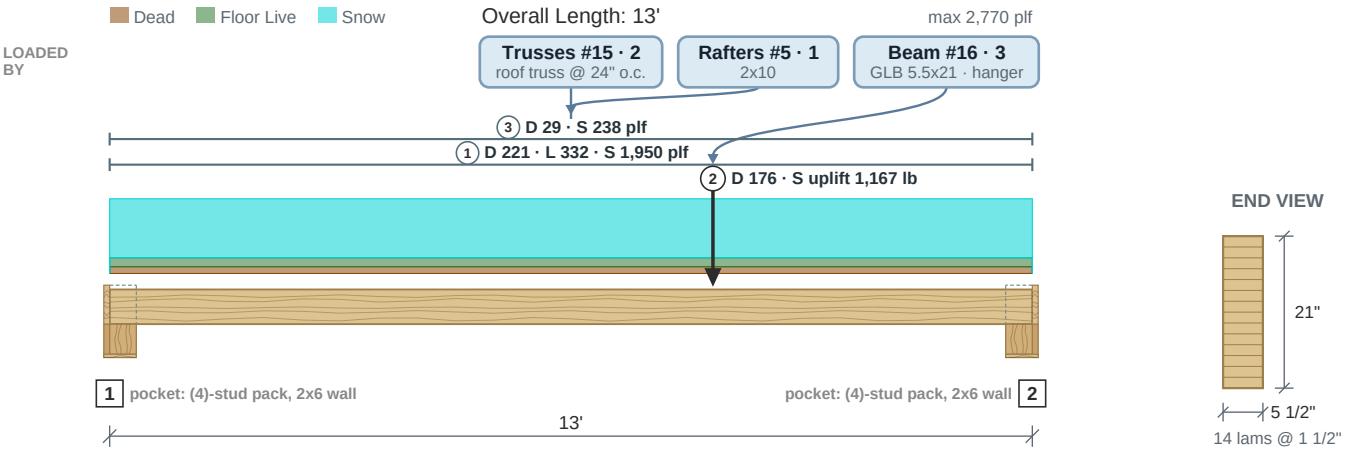

Drawing is conceptual. Locations are measured from the left end of the member; all dimensions are horizontal.

Design Results	Actual @ Location	Allowed	Result	LDF	Load Combination
Member Reaction (lbs)	15,674 @ 0	19,662 (5 1/2")	Passed (80% used)	--	
Plate Bearing (psi)	518 @ 0	668 (2x6 wall, DF-L #2)	Passed (78% used)	--	
Shear (lbs)	10,797 @ 1' 11 3/4"	23,470	Passed (46% used)	1.15	D+S
Moment (Ft-lbs)	49,851 @ 6' 4 7/16"	91,586	Passed (54% used)	1.15	D+S
Live Load Defl. (in)	0.173 @ 6' 7 5/16"	0.65	Passed (L/900)	--	S
Total Load Defl. (in)	0.198 @ 6' 7 5/16"	0.867	Passed (L/787)	--	D+S

- Deflection criteria (IRC Table R301.7): floor live alone L/360; roof live or snow alone L/240; dead plus live L/180.
- Bending adjustment factors: CD = 1.15, CV = 0.985, CL = 1.00 (D+S).
- Beam stability: each moment checked against the bracing of its compression edge (CL = 1.00 where braced).
- Unbalanced glulam layup: install with the tension laminations at the bottom, proper side up as marked by the manufacturer.
- Member self weight of 26.3 plf is included.
- Calculations per NDS 2018, ASD, every load combination with its own load duration factor.

	Bearing Length		Loads to Supports (lbs)				
Supports	**Provided**	**Required**	**Dead**	**Floor Live**	**Snow**	**Total**	**Load goes to**
1 @ 0	5 1/2"	4 3/8"	1,856	2,156	13,818	**15,674**	SpotFtg Bm #10-1 (in a beam pocket in a 2x6 stud wall 10 ft tall (the default), on a (4)-stud pack -- no post cap)
2 @ 13'	5 1/2"	4 5/16"	1,910	2,156	13,459	**15,369**	SpotFtg Bm #10-2 (in a beam pocket in a 2x6 stud wall 10 ft tall (the default), on a (4)-stud pack -- no post cap)

Total = the governing ASD combination at that support; the category columns are service loads.

Lateral Bracing	Bracing Intervals	Comments
Top Edge (Lu)	continuous	braced by the sheathing
Bottom Edge (Lu)	13' o/c	used for C_L only where the bottom edge is in compression

Vertical Loads	Location	Trib. Width	Dead (0.90)	Floor Live (1.00)	Snow (1.15)	Comments
0 - Self Weight (PLF)	0 to 13'	N/A	26.3	--	--	
1 - Uniform (PLF)	0 to 13'	N/A	221	331.7	1,950	Linked from: Trusses #15, Support 2
2 - Point (lb)	8' 6"	N/A	175.7	--	-1,167	Linked from: Beam #16, Support 3
3 - Uniform (PLF)	0 to 13'	N/A	28.9	--	238	Linked from: Rafters #5, Support 1

Shear, Moment and Deflection

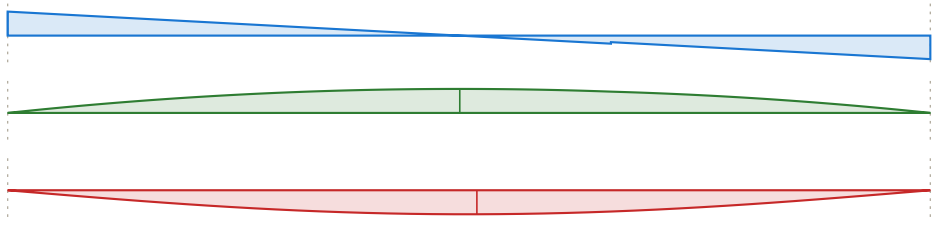

Shear (lbs)
D+S
max 15,674 @ 0

Moment (ft-lbs)
D+S
max 49,850 @ 6' 4 7/16"

Deflection (in)
D+S
0.198 in down @ 6' 7 5/16"
limit 0.867 in on the span

Beam #11

(2) 1 3/4" x 14" 2.0E Microlam LVL (Weyerhaeuser)

Level: Floor - 2nd Level | Member type: Beam (Roof Beam) | Length: 10' 4" | 2018 IRC | 2018 NDS | ASD

PASSED

Controls: Moment 34% used
Section adequacy 66.1% (capacity to spare)

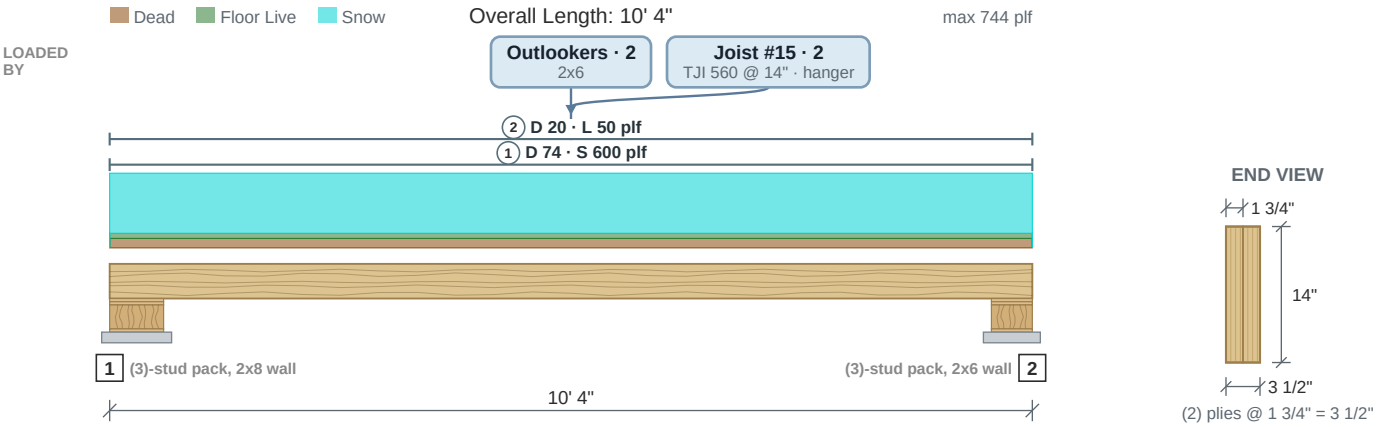

Drawing is conceptual. Locations are measured from the left end of the member; all dimensions are horizontal.

Design Results	Actual @ Location	Allowed	Result	LDF	Load Combination
Member Reaction (lbs)	3,659 @ 10' 4"	14,438 (5 1/2")	Passed (25% used)	--	
Plate Bearing (psi)	190 @ 10' 4"	668 (2x6 wall, DF-L #2)	Passed (28% used)	--	
Shear (lbs)	2,671 @ 8' 11 1/4"	10,708	Passed (25% used)	1.15	D+S
Moment (Ft-lbs)	9,453 @ 5' 2"	27,897	Passed (34% used)	1.15	D+S
Live Load Defl. (in)	0.115 @ 5' 2"	0.517	Passed (L/1,078)	--	S
Total Load Defl. (in)	0.136 @ 5' 2"	0.689	Passed (L/913)	--	D+S

- Deflection criteria (IRC Table R301.7): floor live alone L/360; roof live or snow alone L/240; dead plus live L/180.
- Bending adjustment factors: CD = 1.15, CV = 0.979, CL = 1.00 (D+S).
- Beam stability: each moment checked against the bracing of its compression edge (CL = 1.00 where braced).
- Member self weight of 14.3 plf is included.
- Calculations per NDS 2018 and Weyerhaeuser ICC-ES ESR-1387, ASD, every load combination with its own load duration factor.

	Bearing Length		Loads to Supports (lbs)				
Supports	**Provided**	**Required**	**Dead**	**Floor Live**	**Snow**	**Total**	**Load goes to**
1 @ 0	7 1/4"	1 3/8"	559	258	3,100	**3,659**	SpotFtg Bm #11-1 (in a 2x8 stud wall 10 ft tall (the default), on a (3)-stud pack -- no post cap)
2 @ 10' 4"	5 1/2"	1 3/8"	559	258	3,100	**3,659**	SpotFtg Bm #11-2 (in a 2x6 stud wall 10 ft tall (the default), on a (3)-stud pack -- no post cap)

Total = the governing ASD combination at that support; the category columns are service loads.

Lateral Bracing	Bracing Intervals	Comments
Top Edge (Lu)	continuous	braced by the sheathing
Bottom Edge (Lu)	10' 4" o/c	used for C_L only where the bottom edge is in compression

Vertical Loads	Location	Trib. Width	Dead (0.90)	Floor Live (1.00)	Snow (1.15)	Comments
0 - Self Weight (PLF)	0 to 10' 4"	N/A	14.3	--	--	
1 - Uniform (PLF)	0 to 10' 4"	N/A	73.6	--	600	Linked from: Outlookers, Support 2
2 - Uniform (PLF)	0 to 10' 4"	N/A	20.2	50	--	Linked from: Joist #15, Support 2

Shear, Moment and Deflection

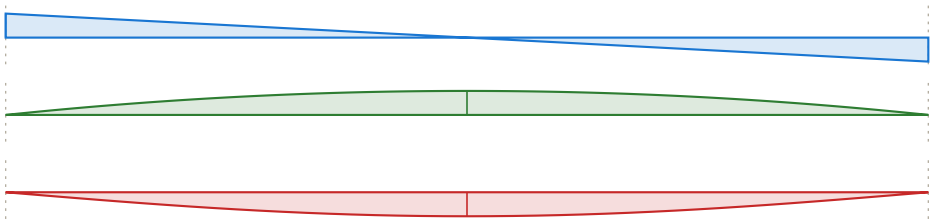

Shear (lbs)
D+S
max 3,659 @ 0

Moment (ft-lbs)
D+S
max 9,453 @ 5' 2"

Deflection (in)
D+S
0.114 in down @ 5' 2"
limit 0.689 in on the span

Beam #12

(1) 5 1/2" x 13 1/2" 24F-1.8E 24F-V4 DF/DF Glulam

Level: Roof | Member type: Beam (Roof Beam) | Length: 19' | 2018 IRC | 2018 NDS | ASD

PASSED

Controls: Bearing 55% used
Section adequacy 45.2% (capacity to spare)

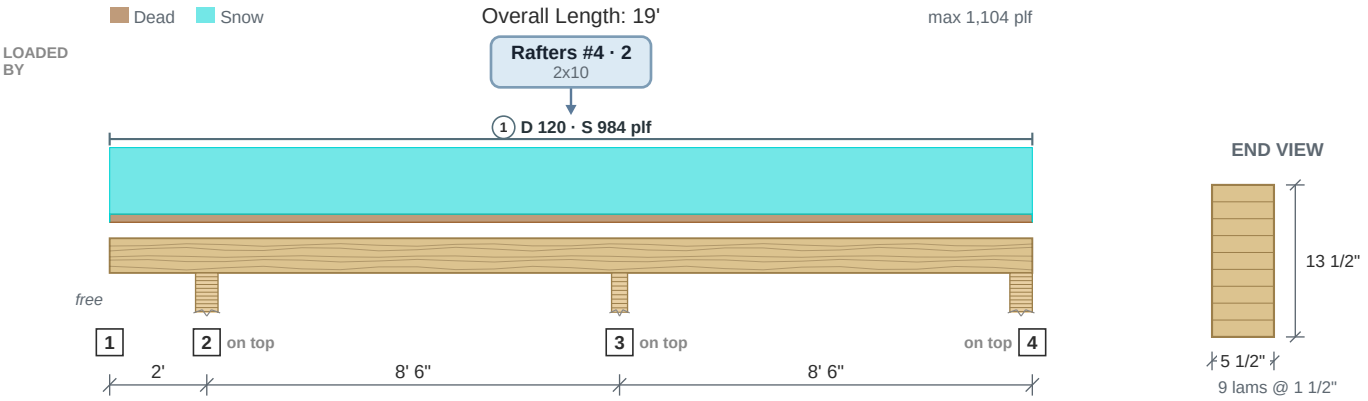

Drawing is conceptual. Locations are measured from the left end of the member; all dimensions are horizontal.

Design Results	Actual @ Location	Allowed	Result	LDF	Load Combination
Member Reaction (lbs)	11,514 @ 10' 6"	21,003 (5 1/2")	Passed (55% used)	--	
Shear (lbs)	4,371 @ 11' 10 1/4"	15,088	Passed (29% used)	1.15	D+S
Neg Moment (Ft-lbs)	-9,563 @ 10' 6"	29,318	Passed (33% used)	1.15	D+S
Live Load Defl. (in)	0.025 @ 15' 2 11/16"	0.425	Passed (L/4,014)	--	S
Total Load Defl. (in)	0.029 @ 15' 2 11/16"	0.567	Passed (L/3,525)	--	D+S

- Deflection criteria (IRC Table R301.7): floor live alone L/360; roof live or snow alone L/240; dead plus live L/180.
- Overhang deflection criteria: LL (2L/360) and TL (2L/180) -- a cantilever is limited on twice its length.
- Bending adjustment factors: CD = 1.15, CV = 0.991, CL = 0.99 (D+S).
- Beam stability (NDS 3.3.3) governs bending: negative moment 9562 lbf-ft, 2.00-10.50 ft, CL 0.990 (unbraced 8.5 ft).
- Unbalanced glulam layup: install with the tension laminations at the bottom, proper side up as marked by the manufacturer.
- Member self weight of 16.9 plf is included.
- Calculations per NDS 2018, ASD, every load combination with its own load duration factor.

	Bearing Length		Loads to Supports (lbs)			
Supports	**Provided**	**Required**	**Dead**	**Snow**	**Total**	**Load goes to**
1 @ 0	--	--	--	--	--	free end (cantilever tip)
2 @ 2'	8 3/4"	1 5/16"	748	5,396	**6,144**	Beam #15 (bears on top)
3 @ 10' 6"	5 1/2"	2 7/8"	1,402	10,112	**11,514**	Beam #16 (bears on top)
4 @ 19'	8 3/4"	1"	443	3,196	**3,639**	Beam #17 (bears on top)

Total = the governing ASD combination at that support; the category columns are service loads.

Lateral Bracing	Bracing Intervals	Comments
Top Edge (Lu)	continuous	braced by the sheathing
Bottom Edge (Lu)	8' 6" o/c	governs C_L here: the bottom edge is in compression

Vertical Loads	Location	Trib. Width	Dead (0.90)	Snow (1.15)	Comments
0 - Self Weight (PLF)	0 to 19'	N/A	16.9	--	
1 - Uniform (PLF)	0 to 19'	N/A	119.5	984.4	Linked from: Rafters #4, Support 2

Shear, Moment and Deflection

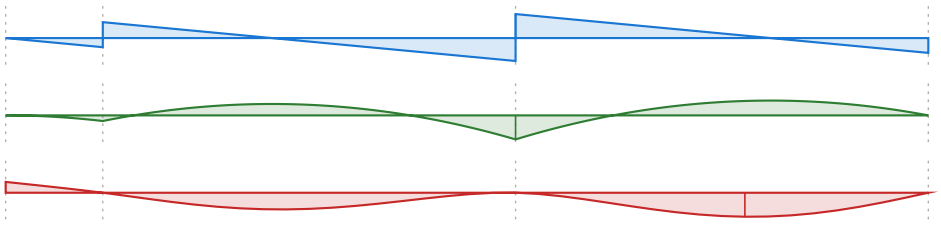

Shear (lbs)
D+S
max 5,889 @ 10' 6"

Moment (ft-lbs)
D+S
max -9,562 @ 10' 6"

Deflection (in)
D+S
0.029 in down @ 15' 2 11/16"
limit 0.567 in on the span

Beam #13

(1) 8 3/4" x 18" 24F-1.8E 24F-V4 DF/DF Glulam

Level: Roof | Member type: Beam (Roof Beam) | Length: 13' 11" | 2018 IRC | 2018 NDS | ASD

PASSED

Controls: Moment 86% used
Section adequacy 2.8% (capacity to spare)

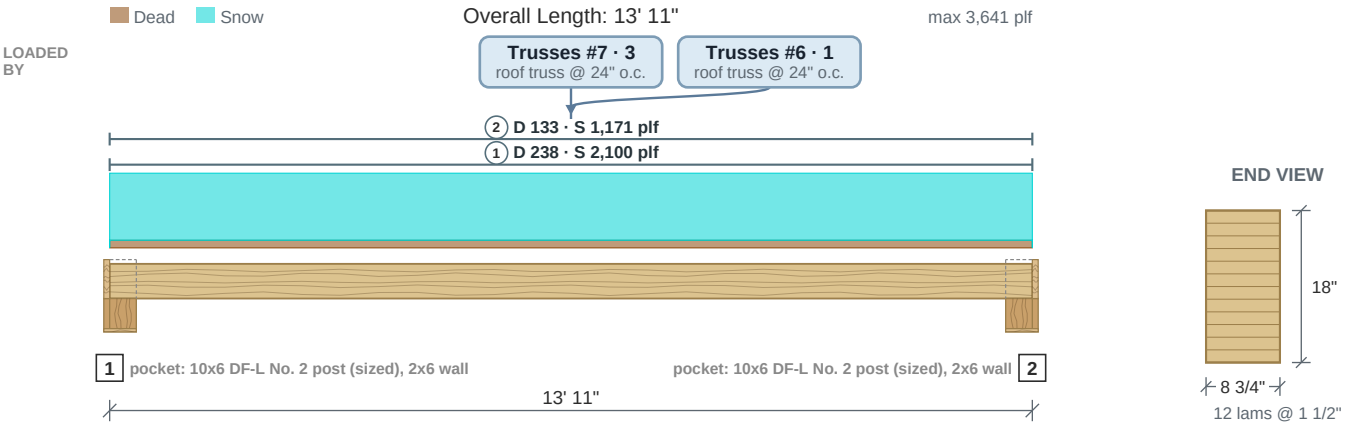

Drawing is conceptual. Locations are measured from the left end of the member; all dimensions are horizontal.

Design Results	Actual @ Location	Allowed	Result	LDF	Load Combination
Member Reaction (lbs)	25,588 @ 0	31,281 (5 1/2")	Passed (82% used)	--	
Plate Bearing (psi)	532 @ 0	668 (2x6 wall, DF-L #2)	Passed (80% used)	--	
Shear (lbs)	19,230 @ 12' 2 1/4"	32,004	Passed (60% used)	1.15	D+S
Moment (Ft-lbs)	89,027 @ 6' 11 1/2"	103,076	Passed (86% used)	1.15	D+S
Live Load Defl. (in)	0.361 @ 6' 11 1/2"	0.696	Passed (L/463)	--	S
Total Load Defl. (in)	0.405 @ 6' 11 1/2"	0.928	Passed (L/412)	--	D+S

- Deflection criteria (IRC Table R301.7): floor live alone L/360; roof live or snow alone L/240; dead plus live L/180.
- Bending adjustment factors: CD = 1.15, CV = 0.948, CL = 1.00 (D+S).
- Beam stability: each moment checked against the bracing of its compression edge (CL = 1.00 where braced).
- Unbalanced glulam layup: install with the tension laminations at the bottom, proper side up as marked by the manufacturer.
- Member self weight of 35.9 plf is included.
- Calculations per NDS 2018, ASD, every load combination with its own load duration factor.

	Bearing Length		Loads to Supports (lbs)			
Supports	Provided	Required	Dead	Snow	Total	Load goes to
1 @ 0	5 1/2"	4 1/2"	2,829	22,759	**25,588**	SpotFtg Bm #13-1 (in a beam pocket in a 2x6 stud wall 10 ft tall (the default), on a 10x6 DF-L No. 2 post (sized) -- no post cap)
2 @ 13' 11"	5 1/2"	4 1/2"	2,829	22,759	**25,588**	SpotFtg Bm #13-2 (in a beam pocket in a 2x6 stud wall 10 ft tall (the default), on a 10x6 DF-L No. 2 post (sized) -- no post cap)

Total = the governing ASD combination at that support; the category columns are service loads.

Lateral Bracing	Bracing Intervals	Comments
Top Edge (Lu)	continuous	braced by the sheathing
Bottom Edge (Lu)	13' 11" o/c	used for C_L only where the bottom edge is in compression

Vertical Loads	Location	Trib. Width	Dead (0.90)	Snow (1.15)	Comments
0 - Self Weight (PLF)	0 to 13' 11"	N/A	35.9	--	
1 - Uniform (PLF)	0 to 13' 11"	N/A	238	2,100	Linked from: Trusses #7, Support 3
2 - Uniform (PLF)	0 to 13' 11"	N/A	132.7	1,171	Linked from: Trusses #6, Support 1

Shear, Moment and Deflection

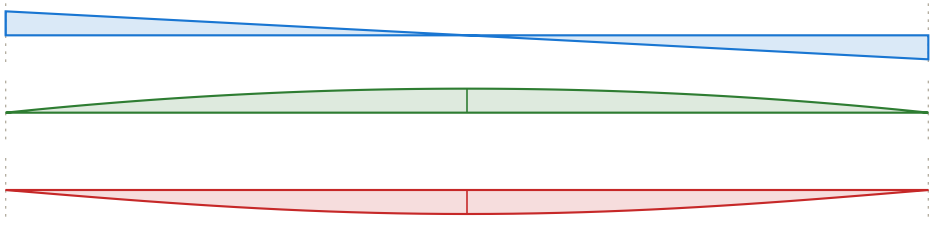

Shear (lbs)
D+S
max 25,588 @ 0

Moment (ft-lbs)
D+S
max 89,028 @ 6' 11 1/2"

Deflection (in)
D+S
0.405 in down @ 6' 11 1/2"
limit 0.928 in on the span

Beam #14

(1) 5 1/2" x 13 1/2" 24F-1.8E 24F-V4 DF/DF Glulam

Level: Roof | Member type: Beam (Roof Beam) | Length: 25' 6" | 2018 IRC | 2018 NDS | ASD

PASSED

Controls: Bearing 34% used
Section adequacy 66.5% (capacity to spare)

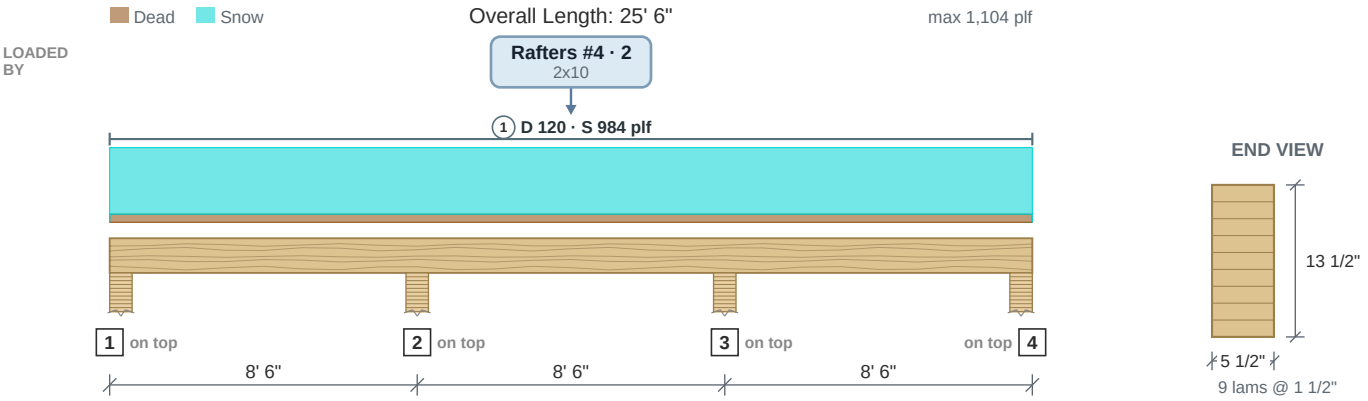

Drawing is conceptual. Locations are measured from the left end of the member; all dimensions are horizontal.

Design Results	Actual @ Location	Allowed	Result	LDF	Load Combination
Member Reaction (lbs)	10,480 @ 8' 6"	31,281 (8 3/4")	Passed (34% used)	--	
Shear (lbs)	4,047 @ 18' 5 7/8"	15,088	Passed (27% used)	1.15	D+S
Neg Moment (Ft-lbs)	-8,098 @ 8' 6"	28,506	Passed (28% used)	1.15	D+S
Live Load Defl. (in)	0.03 @ 3' 7 11/16"	0.425	Passed (L/3,393)	--	S
Total Load Defl. (in)	0.034 @ 3' 7 11/16"	0.567	Passed (L/2,980)	--	D+S

- Deflection criteria (IRC Table R301.7): floor live alone L/360; roof live or snow alone L/240; dead plus live L/180.
- Bending adjustment factors: CD = 1.15, CV = 0.962, CL = 0.99 (D+S).
- Beam stability (NDS 3.3.3) governs bending: negative moment 8098 lbf-ft, 0.00-8.50 ft, CL 0.990 (unbraced 8.5 ft).
- Unbalanced glulam layup: install with the tension laminations at the bottom, proper side up as marked by the manufacturer.
- Member self weight of 16.9 plf is included.
- Calculations per NDS 2018, ASD, every load combination with its own load duration factor.

	Bearing Length		Loads to Supports (lbs)			
Supports	**Provided**	**Required**	**Dead**	**Snow**	**Total**	**Load goes to**
1 @ 0	8 3/4"	1 1/16"	464	3,347	**3,811**	Beam #17 (bears on top)
2 @ 8' 6"	8 3/4"	2 9/16"	1,276	9,204	**10,480**	Beam #18 (bears on top)
3 @ 17'	8 3/4"	2 9/16"	1,276	9,204	**10,480**	Beam #19 (bears on top)
4 @ 25' 6"	8 3/4"	1 1/16"	464	3,347	**3,811**	Beam #20 (bears on top)

Total = the governing ASD combination at that support; the category columns are service loads.

Lateral Bracing	Bracing Intervals	Comments
Top Edge (Lu)	continuous	braced by the sheathing
Bottom Edge (Lu)	8' 6" o/c	governs C_L here: the bottom edge is in compression

Vertical Loads	Location	Trib. Width	Dead (0.90)	Snow (1.15)	Comments
0 - Self Weight (PLF)	0 to 25' 6"	N/A	16.9	--	
1 - Uniform (PLF)	0 to 25' 6"	N/A	119.5	984.4	Linked from: Rafters #4, Support 2

Shear, Moment and Deflection

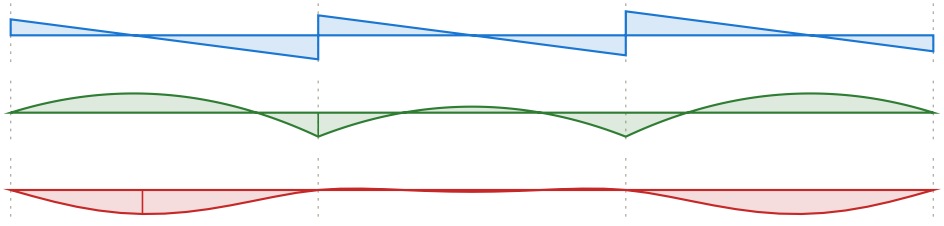

Shear (lbs)
D+S
max 5,716 @ 17'

Moment (ft-lbs)
D+S
max -8,098 @ 8' 6"

Deflection (in)
D+S
0.034 in down @ 3' 7 11/16"
limit 0.567 in on the span

Beam #15

(1) 8 3/4" x 21" 24F-1.8E 24F-V4 DF/DF Glulam

Level: Roof | Member type: Beam (Roof Beam) | Length: 25' | 2018 IRC | 2018 NDS | ASD

PASSED

Controls: Moment 59% used
Section adequacy 40.7% (capacity to spare)

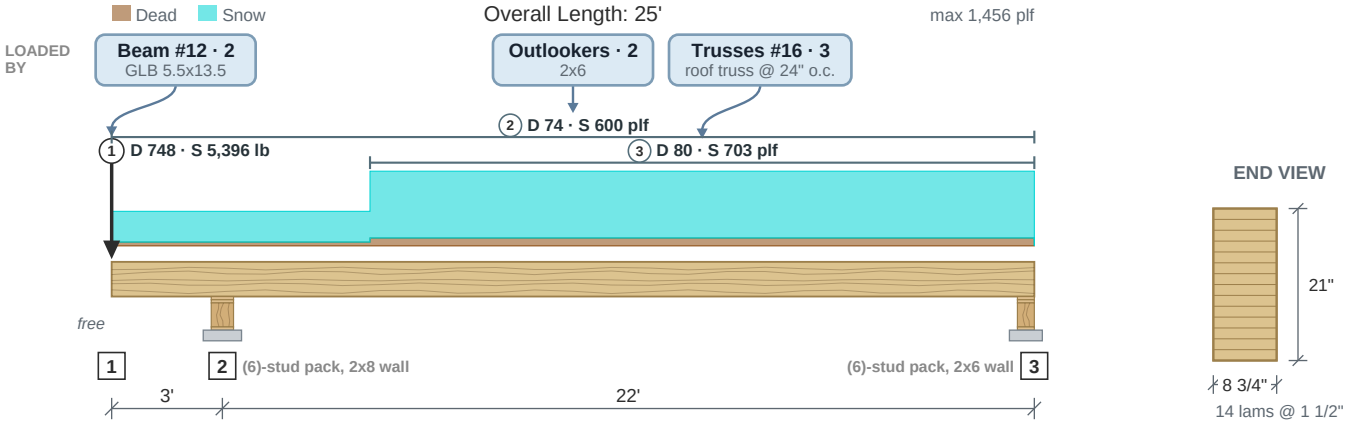

Drawing is conceptual. Locations are measured from the left end of the member; all dimensions are horizontal.

Design Results	Actual @ Location	Allowed	Result	LDF	Load Combination
Member Reaction (lbs)	22,910 @ 3'	41,234 (7 1/4")	Passed (56% used)	--	
Plate Bearing (psi)	361 @ 3'	625 (2x8 wall, DF-L #2)	Passed (58% used)	--	
Shear (lbs)	13,151 @ 5' 5/8"	37,338	Passed (35% used)	1.15	D+S
Moment (Ft-lbs)	77,229 @ 14' 10 1/2"	130,292	Passed (59% used)	1.15	D+S
Live Load Defl. (in)	0.165 @ 0	0.3	Passed (2L/436)	--	S
Total Load Defl. (in)	0.191 @ 0	0.4	Passed (2L/378)	--	D+S

- Deflection criteria (IRC Table R301.7): floor live alone L/360; roof live or snow alone L/240; dead plus live L/180.
- Overhang deflection criteria: LL (2L/360) and TL (2L/180) -- a cantilever is limited on twice its length.
- Bending adjustment factors: CD = 1.15, CV = 0.881, CL = 1.00 (D+S).
- Beam stability: each moment checked against the bracing of its compression edge (CL = 1.00 where braced).
- Unbalanced glulam layup: install with the tension laminations at the bottom, proper side up as marked by the manufacturer.
- Member self weight of 41.9 plf is included.
- Calculations per NDS 2018, ASD, every load combination with its own load duration factor.

	Bearing Length		Loads to Supports (lbs)			
Supports	**Provided**	**Required**	**Dead**	**Snow**	**Total**	**Load goes to**
1 @ 0	--	--	--	--	--	free end (cantilever tip)
2 @ 3'	7 1/4"	3 5/8"	3,077	19,832	**22,910**	SpotFtg Bm #15-1 (in a 2x8 stud wall 10 ft tall (the default), on a (6)-stud pack -- no post cap)
3 @ 25'	5 1/2"	2 11/16"	1,992	13,220	**15,212**	SpotFtg Bm #15-2 (in a 2x6 stud wall 10 ft tall (the default), on a (6)-stud pack -- no post cap)

Total = the governing ASD combination at that support; the category columns are service loads.

Lateral Bracing	Bracing Intervals	Comments
Top Edge (Lu)	continuous	braced by the sheathing
Bottom Edge (Lu)	22' o/c	used for C_L only where the bottom edge is in compression

Vertical Loads	Location	Trib. Width	Dead (0.90)	Snow (1.15)	Comments
0 - Self Weight (PLF)	0 to 25'	N/A	41.9	--	
1 - Point (lb)	0	N/A	747.9	5,396	Linked from: Beam #12, Support 2
2 - Uniform (PLF)	0 to 25'	N/A	73.6	600	Linked from: Outlookers, Support 2
3 - Uniform (PLF)	7' to 25'	N/A	79.7	703.1	Linked from: Trusses #16, Support 3

Beam #15 (continued)

Roof Beam | (1) 8 3/4" x 21" 24F-1.8E 24F-V4 DF/DF Glulam

Shear, Moment and Deflection

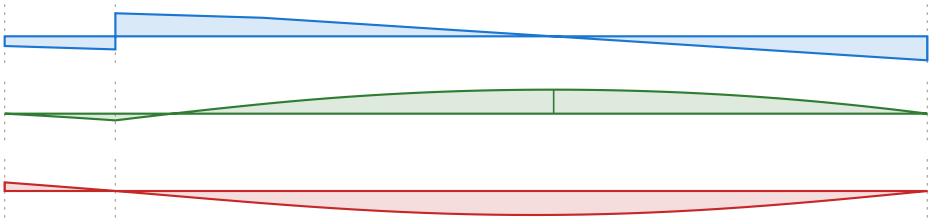

Shear (lbs)
D+S
max -15,212 @ 25'

Moment (ft-lbs)
D+S
max 77,227 @ 14' 10 1/2"

Deflection (in)
D+S
0.191 in up @ 0
limit 0.4 in on 2L (cantilever)

Beam #16

(1) 5 1/2" x 21" 24F-1.8E 24F-V4 DF/DF Glulam

Level: Floor - 2nd Level | Member type: Beam (Roof Beam) | Length: 29' | 2018 IRC | 2018 NDS | ASD

PASSED

Controls: Deflection 66% used

Section adequacy 33.7% (capacity to spare)

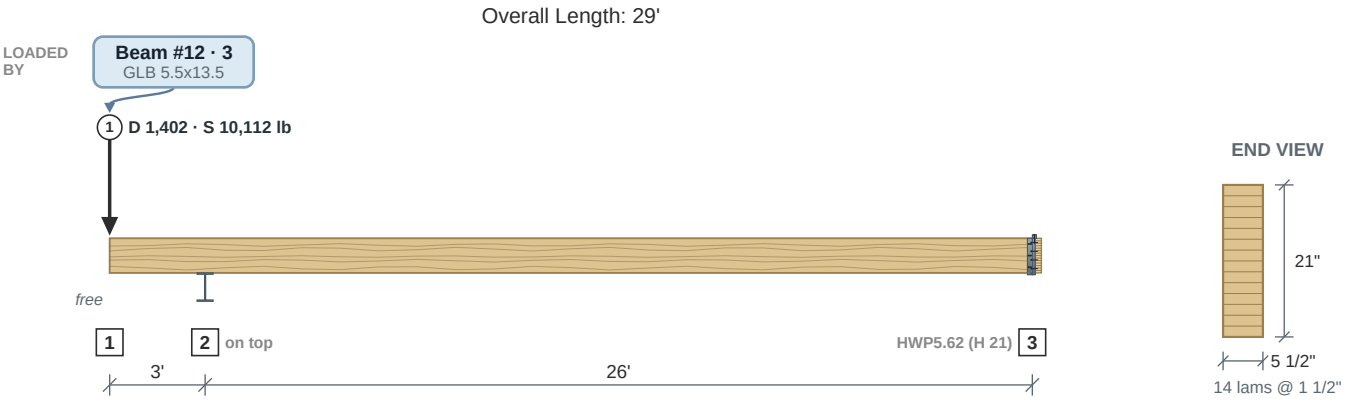

Drawing is conceptual. Locations are measured from the left end of the member; all dimensions are horizontal.

Design Results	Actual @ Location	Allowed	Result	LDF	Load Combination
Member Reaction (lbs)	13,268 @ 3'	21,897 (5 3/4")	Passed (61% used)	--	
Shear (lbs)	11,540 @ 1' 1/8"	23,470	Passed (49% used)	1.15	D+S
Neg Moment (Ft-lbs)	-34,658 @ 3'	64,953	Passed (53% used)	1.15	D+S
Live Load Defl. (in)	0.199 @ 0	0.3	Passed (2L/362)	--	S
Total Load Defl. (in)	0.214 @ 0	0.4	Passed (2L/336)	--	D+S

- Deflection criteria (IRC Table R301.7): floor live alone L/360; roof live or snow alone L/240; dead plus live L/180.
- Overhang deflection criteria: LL (2L/360) and TL (2L/180) -- a cantilever is limited on twice its length.
- Bending adjustment factors: CD = 1.15, CV = 0.909, CL = 0.906 (D+S).
- Beam stability (NDS 3.3.3) governs bending: negative moment 34659 lbf-ft, 3.00-29.00 ft, CL 0.906 (unbraced 26.0 ft).
- Unbalanced glulam layup: install with the tension laminations at the bottom, proper side up as marked by the manufacturer.
- Member self weight of 26.3 plf is included.
- Calculations per NDS 2018, ASD, every load combination with its own load duration factor.

	Bearing Length		Loads to Supports (lbs)			
Supports	**Provided**	**Required**	**Dead**	**Snow**	**Total**	**Load goes to**
1 @ 0	--	--	--	--	--	free end (cantilever tip)
2 @ 3'	5 3/4"	3 5/16"	1,989	11,279	**13,268**	Header #31 (bears on top)
3 @ 29'	3" seat	1/4"	176	-1,167	**176**	Beam #10 (flush, in an HWP5.62 (H 21) top flange, 12%)

Total = the governing ASD combination at that support; the category columns are service loads.

Lateral Bracing	Bracing Intervals	Comments
Top Edge (Lu)	continuous	braced by the sheathing
Bottom Edge (Lu)	26' o/c	governs C_L here: the bottom edge is in compression

Vertical Loads	Location	Trib. Width	Dead (0.90)	Snow (1.15)	Comments
0 - Self Weight (PLF)	0 to 29'	N/A	26.3	--	
1 - Point (lb)	0	N/A	1,402	10,112	Linked from: Beam #12, Support 3

Shear, Moment and Deflection

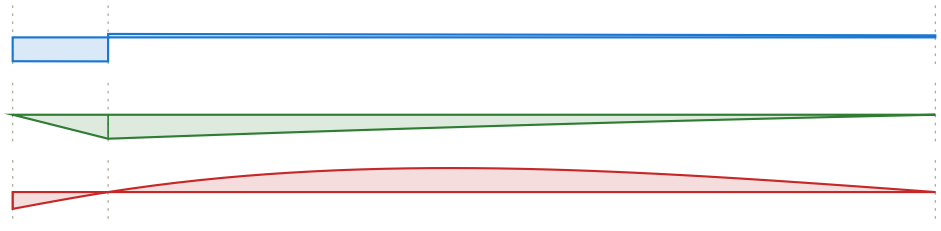

Shear (lbs)
D+S
max -11,593 @ 3'

Moment (ft-lbs)
D+S
max -34,659 @ 3'

Deflection (in)
D+S
0.214 in down @ 0
limit 0.4 in on 2L (cantilever)

Beam #17

(1) 8 3/4" x 21" 24F-1.8E 24F-V4 DF/DF Glulam

Level: Floor - 2nd Level | Member type: Beam (Roof Beam) | Length: 29' | 2018 IRC | 2018 NDS | ASD

PASSED

Controls: Deflection 73% used
Section adequacy 27.1% (capacity to spare)

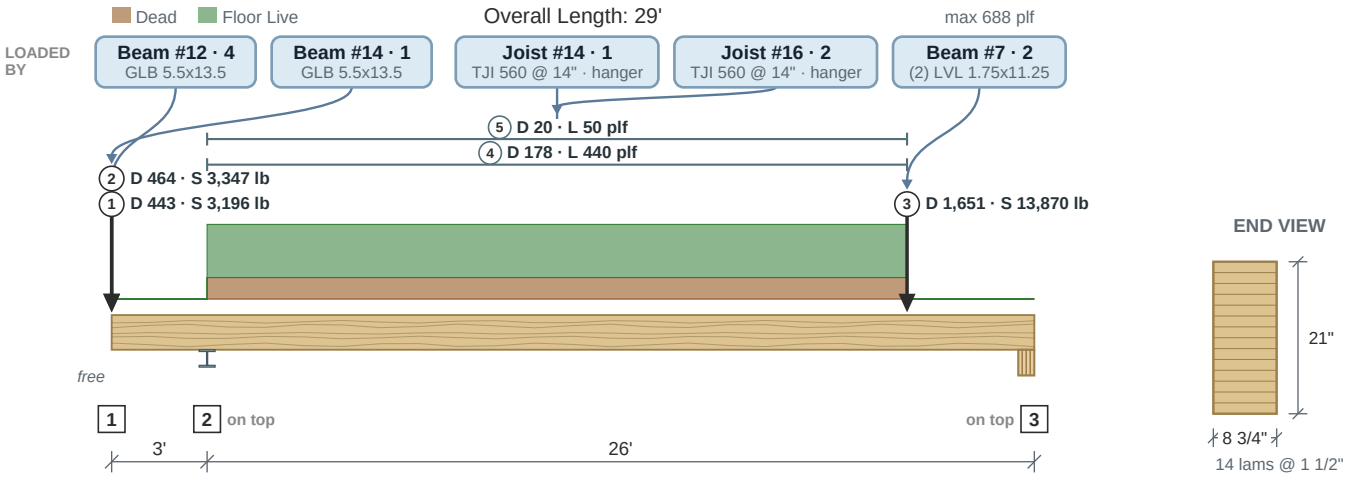

Drawing is conceptual. Locations are measured from the left end of the member; all dimensions are horizontal.

Design Results	Actual @ Location	Allowed	Result	LDF	Load Combination
Member Reaction (lbs)	15,332 @ 29'	39,812 (7")	Passed (39% used)	--	
Shear (lbs)	15,247 @ 26' 11 1/2"	37,338	Passed (41% used)	1.15	D+0.75L+0.75S
Moment (Ft-lbs)	60,818 @ 16' 2 7/8"	111,630	Passed (54% used)	1.00	D+L
Live Load Defl. (in)	0.146 @ 0	0.2	Passed (2L/494)	--	L
Total Load Defl. (in)	0.218 @ 0	0.4	Passed (2L/330)	--	D+L

- Deflection criteria (IRC Table R301.7): floor live alone L/360; roof live or snow alone L/240; dead plus live L/180.
- Overhang deflection criteria: LL (2L/360) and TL (2L/180) -- a cantilever is limited on twice its length.
- Bending adjustment factors: CD = 1.00, CV = 0.868, CL = 1.00 (D+L).
- Beam stability: each moment checked against the bracing of its compression edge (CL = 1.00 where braced).
- Unbalanced glulam layup: install with the tension laminations at the bottom, proper side up as marked by the manufacturer.
- Member self weight of 41.9 plf is included.
- Calculations per NDS 2018, ASD, every load combination with its own load duration factor.

	Bearing Length		Loads to Supports (lbs)				
Supports	**Provided**	**Required**	**Dead**	**Floor Live**	**Snow**	**Total**	**Load goes to**
1 @ 0	--	--	--	--	--	--	free end (cantilever tip)
2 @ 3'	8 1/4"	2 1/2"	4,461	6,219	9,431	**16,199**	Header #36 (bears on top)
3 @ 29'	7"	2 11/16"	3,676	4,561	10,981	**15,332**	Header #30 (bears on top)

Total = the governing ASD combination at that support; the category columns are service loads.

Lateral Bracing	Bracing Intervals	Comments
Top Edge (Lu)	continuous	braced by the sheathing
Bottom Edge (Lu)	26' o/c	used for C_L only where the bottom edge is in compression

Vertical Loads	Location	Trib. Width	Dead (0.90)	Floor Live (1.00)	Snow (1.15)	Comments
0 - Self Weight (PLF)	0 to 29'	N/A	41.9	--	--	
1 - Point (lb)	0	N/A	442.9	--	3,196	Linked from: Beam #12, Support 4
2 - Point (lb)	0	N/A	463.9	--	3,347	Linked from: Beam #14, Support 1
3 - Point (lb)	25'	N/A	1,651	0	13,870	Linked from: Beam #7, Support 2
4 - Uniform (PLF)	3' to 25'	N/A	178.2	440	--	Linked from: Joist #14, Support 1
5 - Uniform (PLF)	3' to 25'	N/A	20.2	50	--	Linked from: Joist #16, Support 2

Beam #17 (continued)

Roof Beam | (1) 8 3/4" x 21" 24F-1.8E 24F-V4 DF/DF Glulam

Shear, Moment and Deflection

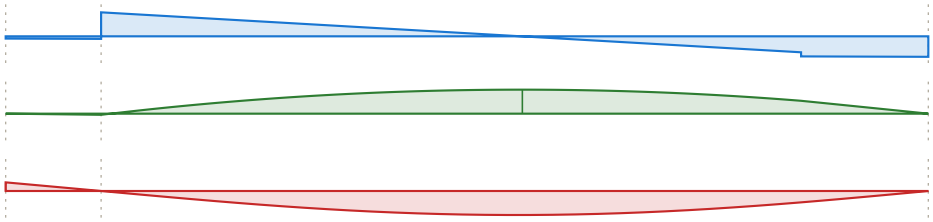

Shear (lbs)
D+L
max 9,648 @ 3'

Moment (ft-lbs)
D+L
max 60,819 @ 16' 2 7/8"

Deflection (in)
D+L
0.218 in up @ 0
limit 0.4 in on 2L (cantilever)

Beam #18

(1) 8 3/4" x 21" 24F-1.8E 24F-V4 DF/DF Glulam

Level: Floor - 2nd Level | Member type: Beam (Roof Beam) | Length: 29' | 2018 IRC | 2018 NDS | ASD

PASSED

Controls: Deflection 67% used

Section adequacy 32.5% (capacity to spare)

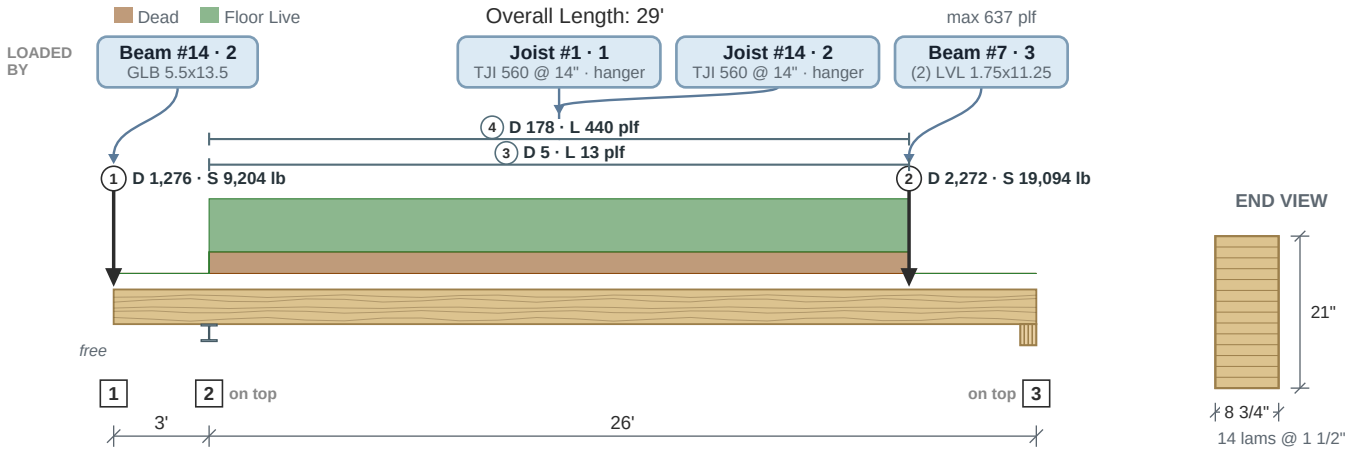

Drawing is conceptual. Locations are measured from the left end of the member; all dimensions are horizontal.

Design Results	Actual @ Location	Allowed	Result	LDF	Load Combination
Member Reaction (lbs)	19,116 @ 29'	39,812 (7")	Passed (48% used)	--	
Shear (lbs)	19,030 @ 26' 11 1/2"	37,338	Passed (51% used)	1.15	D+S
Moment (Ft-lbs)	76,387 @ 21' 10 3/4"	128,373	Passed (60% used)	1.15	D+0.75L+0.75S
Live Load Defl. (in)	0.135 @ 0	0.2	Passed (2L/533)	--	L
Total Load Defl. (in)	0.203 @ 0	0.4	Passed (2L/355)	--	D+L

- Deflection criteria (IRC Table R301.7): floor live alone L/360; roof live or snow alone L/240; dead plus live L/180.
- Overhang deflection criteria: LL (2L/360) and TL (2L/180) -- a cantilever is limited on twice its length.
- Bending adjustment factors: CD = 1.15, CV = 0.868, CL = 1.00 (D+0.75L+0.75S).
- Beam stability: each moment checked against the bracing of its compression edge (CL = 1.00 where braced).
- Unbalanced glulam layup: install with the tension laminations at the bottom, proper side up as marked by the manufacturer.
- Member self weight of 41.9 plf is included.
- Calculations per NDS 2018, ASD, every load combination with its own load duration factor.

	Bearing Length		Loads to Supports (lbs)				
Supports	**Provided**	**Required**	**Dead**	**Floor Live**	**Snow**	**Total**	**Load goes to**
1 @ 0	--	--	--	--	--	--	free end (cantilever tip)
2 @ 3'	8 1/4"	3"	4,780	5,754	13,204	**18,998**	Header #36 (bears on top)
3 @ 29'	7"	3 3/8"	4,021	4,219	15,094	**19,116**	Header #29 (bears on top)

Total = the governing ASD combination at that support; the category columns are service loads.

Lateral Bracing	Bracing Intervals	Comments
Top Edge (Lu)	continuous	braced by the sheathing
Bottom Edge (Lu)	26' o/c	used for C_L only where the bottom edge is in compression

Vertical Loads	Location	Trib. Width	Dead (0.90)	Floor Live (1.00)	Snow (1.15)	Comments
0 - Self Weight (PLF)	0 to 29'	N/A	41.9	--	--	
1 - Point (lb)	0	N/A	1,276	--	9,204	Linked from: Beam #14, Support 2
2 - Point (lb)	25'	N/A	2,272	0	19,094	Linked from: Beam #7, Support 3
3 - Uniform (PLF)	3' to 25'	N/A	5.4	13.3	--	Linked from: Joist #1, Support 1
4 - Uniform (PLF)	3' to 25'	N/A	178.2	440	--	Linked from: Joist #14, Support 2

Shear, Moment and Deflection

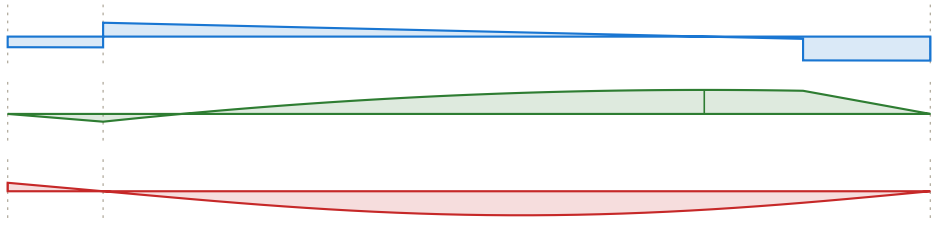

Shear (lbs)
D+0.75L+0.75S
max -18,507 @ 29'

Moment (ft-lbs)
D+0.75L+0.75S
max 76,389 @ 21' 10 3/4"

Deflection (in)
D+L
0.203 in up @ 0
limit 0.4 in on 2L (cantilever)

Beam #19

(1) 8 3/4" x 21" 24F-1.8E 24F-V4 DF/DF Glulam

Level: Floor - 2nd Level | Member type: Beam (Roof Beam) | Length: 29' | 2018 IRC | 2018 NDS | ASD

PASSED

Controls: Bearing 37% used

Section adequacy 63.3% (capacity to spare)

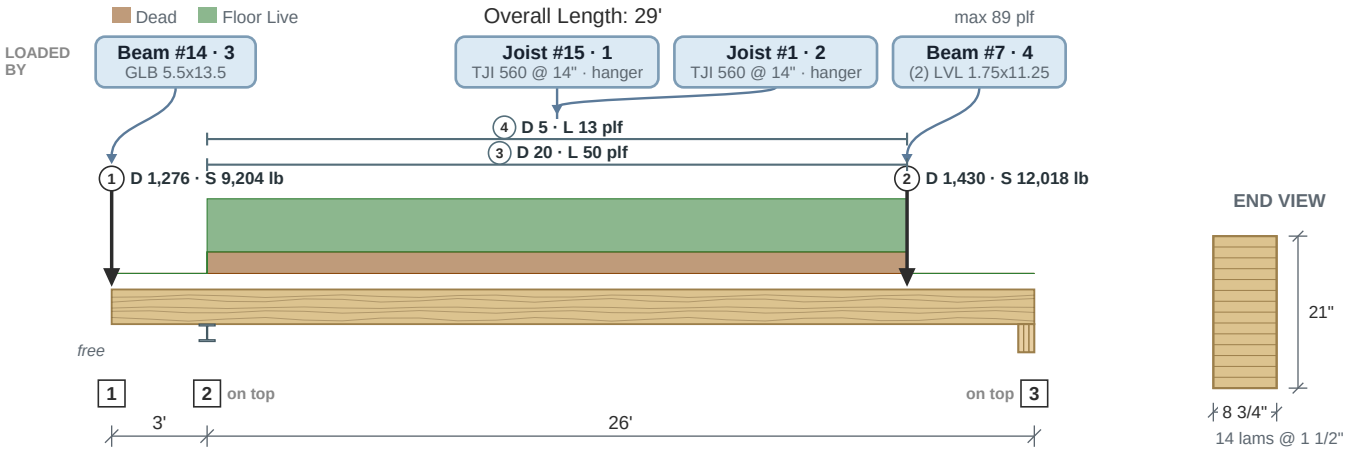

Drawing is conceptual. Locations are measured from the left end of the member; all dimensions are horizontal.

Design Results	Actual @ Location	Allowed	Result	LDF	Load Combination
Member Reaction (lbs)	10,945 @ 29'	29,859 (5 1/4")	Passed (37% used)	--	
Shear (lbs)	10,863 @ 27' 3/8"	37,338	Passed (29% used)	1.15	D+S
Moment (Ft-lbs)	43,448 @ 25'	128,373	Passed (34% used)	1.15	D+S
Live Load Defl. (in)	0.142 @ 20' 8 7/8"	1.3	Passed (L/2,197)	--	S
Total Load Defl. (in)	0.204 @ 20' 3/8"	1.733	Passed (L/1,527)	--	D+S

- Deflection criteria (IRC Table R301.7): floor live alone L/360; roof live or snow alone L/240; dead plus live L/180.
- Overhang deflection criteria: LL (2L/360) and TL (2L/180) -- a cantilever is limited on twice its length.
- Bending adjustment factors: CD = 1.15, CV = 0.868, CL = 1.00 (D+S).
- Beam stability: each moment checked against the bracing of its compression edge (CL = 1.00 where braced).
- Unbalanced glulam layup: install with the tension laminations at the bottom, proper side up as marked by the manufacturer.
- Member self weight of 41.9 plf is included.
- Calculations per NDS 2018, ASD, every load combination with its own load duration factor.

	Bearing Length		Loads to Supports (lbs)				
Supports	**Provided**	**Required**	**Dead**	**Floor Live**	**Snow**	**Total**	**Load goes to**
1 @ 0	--	--	--	--	--	--	free end (cantilever tip)
2 @ 3'	8 1/4"	2 1/4"	2,645	804	12,115	**14,761**	Header #36 (bears on top)
3 @ 29'	5 1/4"	1 15/16"	1,839	589	9,107	**10,945**	Header #28 (bears on top)

Total = the governing ASD combination at that support; the category columns are service loads.

Lateral Bracing	Bracing Intervals	Comments
Top Edge (Lu)	continuous	braced by the sheathing
Bottom Edge (Lu)	26' o/c	used for C_L only where the bottom edge is in compression

Vertical Loads	Location	Trib. Width	Dead (0.90)	Floor Live (1.00)	Snow (1.15)	Comments
0 - Self Weight (PLF)	0 to 29'	N/A	41.9	--	--	
1 - Point (lb)	0	N/A	1,276	--	9,204	Linked from: Beam #14, Support 3
2 - Point (lb)	25'	N/A	1,430	0	12,018	Linked from: Beam #7, Support 4
3 - Uniform (PLF)	3' to 25'	N/A	20.2	50	--	Linked from: Joist #15, Support 1
4 - Uniform (PLF)	3' to 25'	N/A	5.4	13.3	--	Linked from: Joist #1, Support 2

Shear, Moment and Deflection

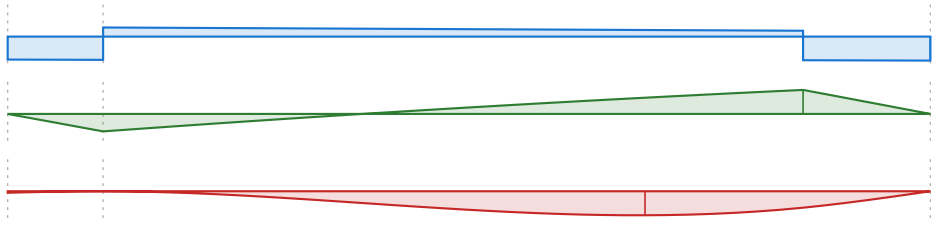

Shear (lbs)
D+S
max -10,945 @ 29'

Moment (ft-lbs)
D+S
max 43,446 @ 25'

Deflection (in)
D+S
0.204 in down @ 20' 3/8"
limit 1.733 in on the span

Beam #20

PASSED

(1) 8 3/4" x 21" 24F-1.8E 24F-V4 DF/DF Glulam

Level: Floor - 2nd Level | Member type: Beam (Roof Beam) | Length: 15' 6" | 2018 IRC | 2018 NDS | ASD

Controls: Bearing on the plates 13% used
Section adequacy 87.1% (capacity to spare)

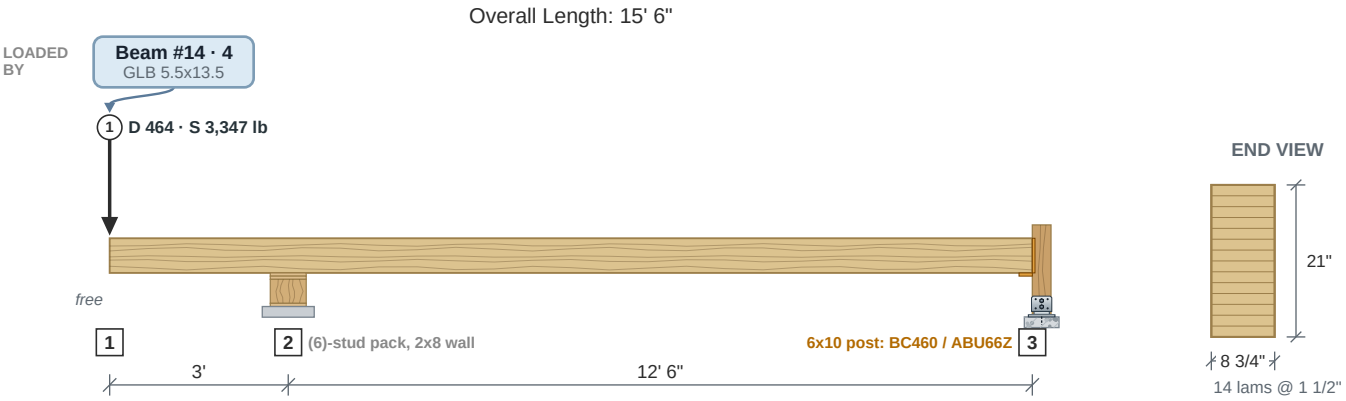

Drawing is conceptual. Locations are measured from the left end of the member; all dimensions are horizontal.

Design Results	Actual @ Location	Allowed	Result	LDF	Load Combination
Member Reaction (lbs)	5,128 @ 3'	41,234 (7 1/4")	Passed (12% used)	--	
Plate Bearing (psi)	81 @ 3'	625 (2x8 wall, DF-L #2)	Passed (13% used)	--	
Shear (lbs)	3,851 @ 11 3/8"	37,338	Passed (10% used)	1.15	D+S
Neg Moment (Ft-lbs)	-11,619 @ 3'	105,349	Passed (11% used)	1.15	D+S
Live Load Defl. (in)	0.022 @ 0	0.3	Passed (2L/3,254)	--	S
Total Load Defl. (in)	0.024 @ 0	0.4	Passed (2L/2,983)	--	D+S

- Deflection criteria (IRC Table R301.7): floor live alone L/360; roof live or snow alone L/240; dead plus live L/180.
- Overhang deflection criteria: LL (2L/360) and TL (2L/180) -- a cantilever is limited on twice its length.
- Bending adjustment factors: CD = 1.15, CV = 0.924, CL = 0.998 (D+S).
- Beam stability (NDS 3.3.3) governs bending: negative moment 11621 lbf-ft, 0.00-3.00 ft, CL 0.998 (unbraced 3.0 ft).
- Unbalanced glulam layup: install with the tension laminations at the bottom, proper side up as marked by the manufacturer.
- Member self weight of 41.9 plf is included.
- Calculations per NDS 2018, ASD, every load combination with its own load duration factor.

	Bearing Length		Loads to Supports (lbs)			
Supports	**Provided**	**Required**	**Dead**	**Snow**	**Total**	**Load goes to**
1 @ 0	--	--	--	--	--	free end (cantilever tip)
2 @ 3'	7 1/4"	1/2"	977	4,150	**5,128**	SpotFtg Bm #20-1 (in a 2x8 stud wall 10 ft tall (the default), on a (6)-stud pack -- no post cap)
3 @ 15' 6"	5 1/2"	1/8"	135	-803	**135**	Column Bm #6-1 (hung on the post's face, in FAB HANGER BM 20-3)

Total = the governing ASD combination at that support; the category columns are service loads.

Lateral Bracing	Bracing Intervals	Comments
Top Edge (Lu)	continuous	braced by the sheathing
Bottom Edge (Lu)	12' 6" o/c	governs C_L here: the bottom edge is in compression

Vertical Loads	Location	Trib. Width	Dead (0.90)	Snow (1.15)	Comments
0 - Self Weight (PLF)	0 to 15' 6"	N/A	41.9	--	
1 - Point (lb)	0	N/A	463.9	3,347	Linked from: Beam #14, Support 4

Shear, Moment and Deflection

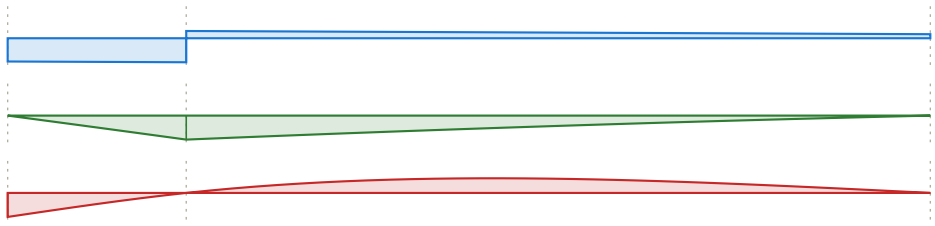

Shear (lbs)
D+S
max -3,936 @ 3'

Moment (ft-lbs)
D+S
max -11,621 @ 3'

Deflection (in)
D+S
0.024 in down @ 0
limit 0.4 in on 2L (cantilever)

Beam #21

(1) 6x10 DF-L No. 2 (5 1/2" x 9 1/2")

Level: Roof | Member type: Beam (Roof Beam) | Length: 5' 4" | 2018 IRC | 2018 NDS | ASD

PASSED

Controls: Moment 73% used
Section adequacy 26.6% (capacity to spare)

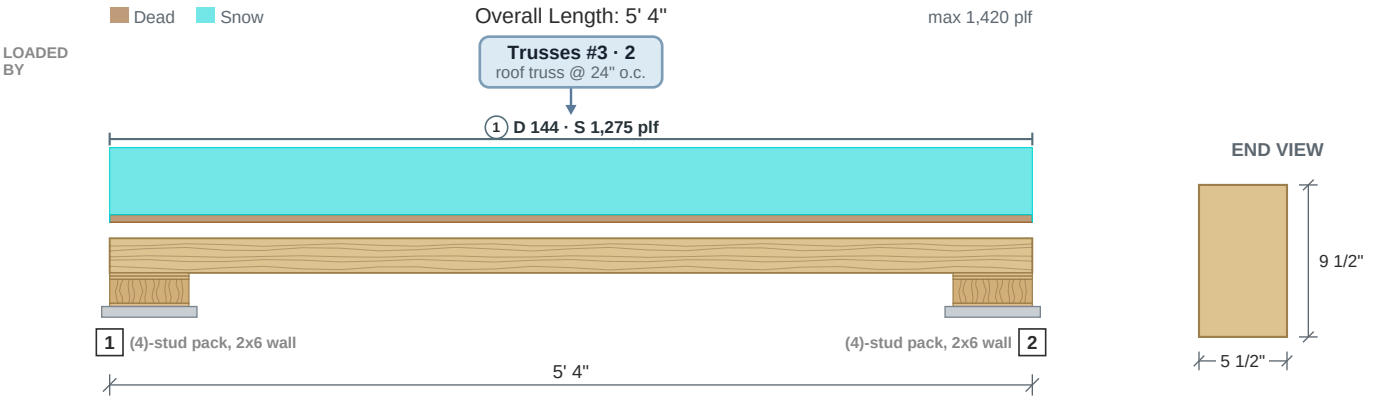

Drawing is conceptual. Locations are measured from the left end of the member; all dimensions are horizontal.

Design Results	Actual @ Location	Allowed	Result	LDF	Load Combination
Member Reaction (lbs)	3,818 @ 0	18,906 (5 1/2")	Passed (20% used)	--	
Plate Bearing (psi)	126 @ 0	668 (2x6 wall, DF-L #2)	Passed (19% used)	--	
Shear (lbs)	2,356 @ 1' 1/4"	6,810	Passed (35% used)	1.15	D+S
Moment (Ft-lbs)	5,091 @ 2' 8"	6,937	Passed (73% used)	1.15	D+S
Live Load Defl. (in)	0.045 @ 2' 8"	0.267	Passed (L/1,408)	--	S
Total Load Defl. (in)	0.051 @ 2' 8"	0.356	Passed (L/1,254)	--	D+S

- Deflection criteria (IRC Table R301.7): floor live alone L/360; roof live or snow alone L/240; dead plus live L/180.
- Bending adjustment factors: CD = 1.15, CL = 1.00 (D+S).
- Beam stability: each moment checked against the bracing of its compression edge (CL = 1.00 where braced).
- Member self weight of 11.9 plf is included.
- Calculations per NDS 2018, ASD, every load combination with its own load duration factor.

	Bearing Length		Loads to Supports (lbs)			
Supports	**Provided**	**Required**	**Dead**	**Snow**	**Total**	**Load goes to**
1 @ 0	5 1/2"	1 1/8"	417	3,400	**3,818**	SpotFtg Bm #21-1 (in a 2x6 stud wall 10 ft tall (the default), on a (4)-stud pack -- no post cap)
2 @ 5' 4"	5 1/2"	1 1/8"	417	3,400	**3,818**	SpotFtg Bm #21-2 (in a 2x6 stud wall 10 ft tall (the default), on a (4)-stud pack -- no post cap)

Total = the governing ASD combination at that support; the category columns are service loads.

Lateral Bracing	Bracing Intervals	Comments
Top Edge (Lu)	continuous	braced by the sheathing
Bottom Edge (Lu)	5' 4" o/c	used for C_L only where the bottom edge is in compression

Vertical Loads	Location	Trib. Width	Dead (0.90)	Snow (1.15)	Comments
0 - Self Weight (PLF)	0 to 5' 4"	N/A	11.9	--	
1 - Uniform (PLF)	0 to 5' 4"	N/A	144.5	1,275	Linked from: Trusses #3, Support 2

Shear, Moment and Deflection

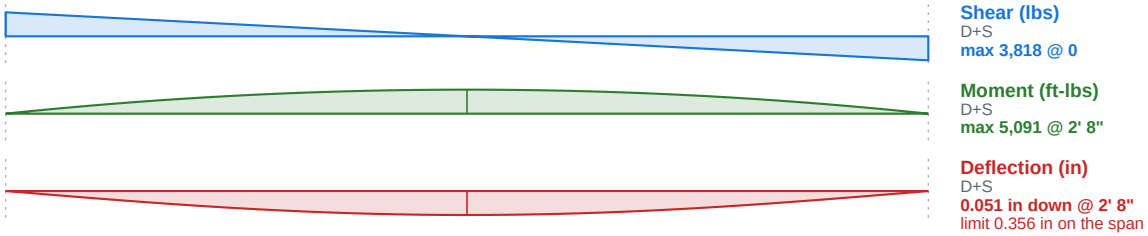

Shear (lbs)
D+S
max 3,818 @ 0

Moment (ft-lbs)
D+S
max 5,091 @ 2' 8"

Deflection (in)
D+S
0.051 in down @ 2' 8"
limit 0.356 in on the span

Beam #22

PASSED

(1) 1 3/4" x 14" 2.0E Microlam LVL (Weyerhaeuser)

Level: Roof | Member type: Beam (Roof Beam) | Length: 4' 7" | 2018 IRC | 2018 NDS | ASD

Controls: Bearing on the plates 8% used
Section adequacy 91.9% (capacity to spare)

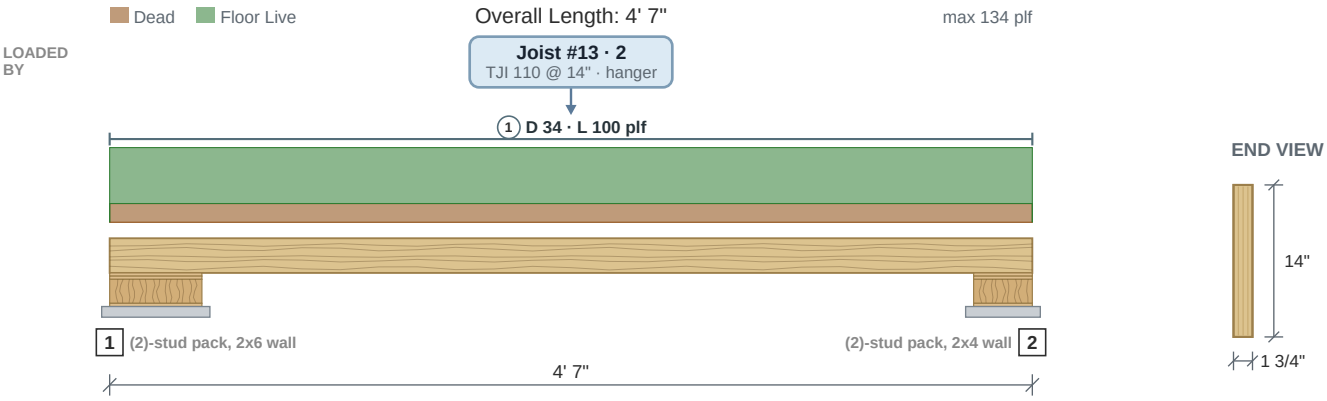

Drawing is conceptual. Locations are measured from the left end of the member; all dimensions are horizontal.

Design Results	Actual @ Location	Allowed	Result	LDF	Load Combination
Member Reaction (lbs)	322 @ 4' 7"	4,594 (3 1/2")	Passed (7% used)	--	
Plate Bearing (psi)	53 @ 4' 7"	692 (2x4 wall, DF-L #2)	Passed (8% used)	--	
Shear (lbs)	138 @ 3' 3 1/4"	4,655	Passed (3% used)	1.00	D+L
Moment (Ft-lbs)	369 @ 2' 3 1/2"	12,129	Passed (3% used)	1.00	D+L
Live Load Defl. (in)	0.002 @ 2' 3 1/2"	0.153	Passed (L/9999+)	--	L
Total Load Defl. (in)	0.003 @ 2' 3 1/2"	0.306	Passed (L/9999+)	--	D+L

- Deflection criteria (IRC Table R301.7): floor live alone L/360; roof live or snow alone L/240; dead plus live L/180.
- Bending adjustment factors: CD = 1.00, CV = 0.979, CL = 1.00 (D+L).
- Beam stability: each moment checked against the bracing of its compression edge (CL = 1.00 where braced).
- Member self weight of 7.1 plf is included.
- Calculations per NDS 2018 and Weyerhaeuser ICC-ES ESR-1387, ASD, every load combination with its own load duration factor.

	Bearing Length		Loads to Supports (lbs)			
Supports	**Provided**	**Required**	**Dead**	**Floor Live**	**Total**	**Load goes to**
1 @ 0	5 1/2"	1/4"	93	229	**322**	SpotFtg Bm #22-1 (in a 2x6 stud wall 10 ft tall (the default), on a (2)-stud pack -- no post cap)
2 @ 4' 7"	3 1/2"	1/4"	93	229	**322**	SpotFtg Bm #22-2 (in a 2x4 stud wall 10 ft tall (the default), on a (2)-stud pack -- no post cap)

Total = the governing ASD combination at that support; the category columns are service loads.

Lateral Bracing	Bracing Intervals	Comments
Top Edge (Lu)	continuous	braced by the sheathing
Bottom Edge (Lu)	4' 7" o/c	used for C_L only where the bottom edge is in compression

Vertical Loads	Location	Trib. Width	Dead (0.90)	Floor Live (1.00)	Comments
0 - Self Weight (PLF)	0 to 4' 7"	N/A	7.1	--	
1 - Uniform (PLF)	0 to 4' 7"	N/A	33.5	100	Linked from: Joist #13, Support 2

Shear, Moment and Deflection

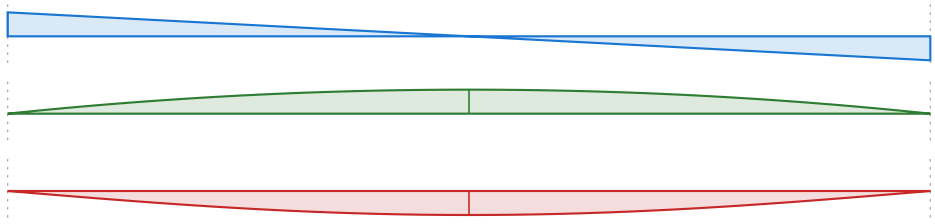

Shear (lbs)
D+L
max 322 @ 0

Moment (ft-lbs)
D+L
max 369 @ 2' 3 1/2"

Deflection (in)
D+L
0.002 in down @ 2' 3 1/2"
limit 0.306 in on the span

Beam #23

PASSED

(1) 1 3/4" x 14" 2.0E Microlam LVL (Weyerhaeuser)

Level: Roof | Member type: Beam (Roof Beam) | Length: 8' 6 1/2" | 2018 IRC | 2018 NDS | ASD

Controls: Bearing 49% used
Section adequacy 51.1% (capacity to spare)

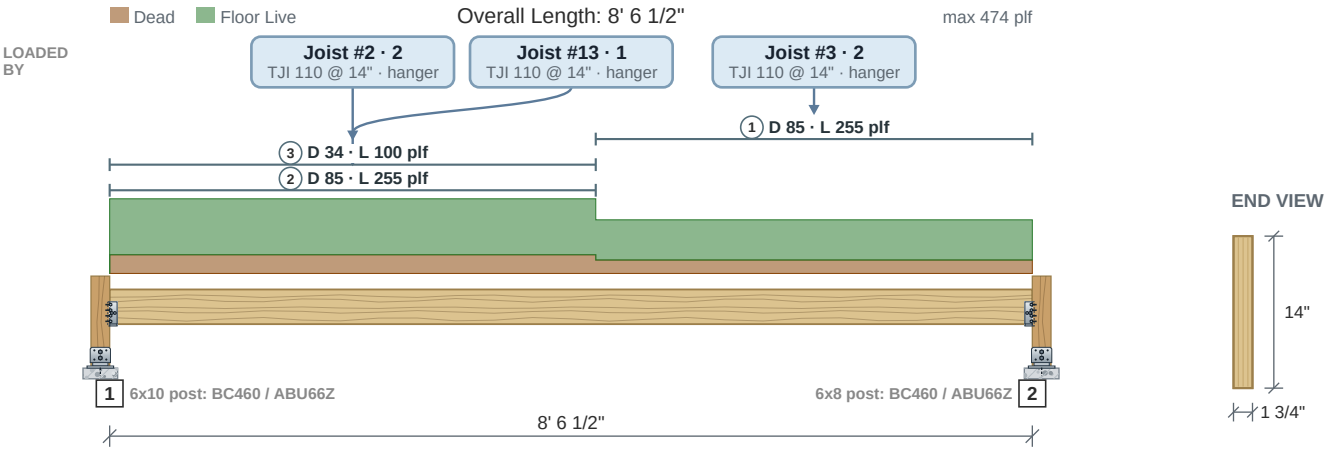

Drawing is conceptual. Locations are measured from the left end of the member; all dimensions are horizontal.

Design Results	Actual @ Location	Allowed	Result	LDF	Load Combination
Member Reaction (lbs)	1,927 @ 0	3,938 (3")	Passed (49% used)	--	
Shear (lbs)	1,927 @ 0	4,655	Passed (41% used)	1.00	D+L
Moment (Ft-lbs)	3,859 @ 4' 3/16"	12,129	Passed (32% used)	1.00	D+L
Live Load Defl. (in)	0.06 @ 4' 3 9/16"	0.285	Passed (L/1,719)	--	L
Total Load Defl. (in)	0.081 @ 4' 3 9/16"	0.569	Passed (L/1,266)	--	D+L

- Deflection criteria (IRC Table R301.7): floor live alone L/360; roof live or snow alone L/240; dead plus live L/180.
- Bending adjustment factors: CD = 1.00, CV = 0.979, CL = 1.00 (D+L).
- Beam stability: each moment checked against the bracing of its compression edge (CL = 1.00 where braced).
- Member self weight of 7.1 plf is included.
- Calculations per NDS 2018 and Weyerhaeuser ICC-ES ESR-1387, ASD, every load combination with its own load duration factor.

	Bearing Length		Loads to Supports (lbs)			
Supports	**Provided**	**Required**	**Dead**	**Floor Live**	**Total**	**Load goes to**
1 @ 0	3" seat	1 1/2"	506	1,421	**1,927**	Column Bm #6-1 (hung on the post's face, in an HUCQ1.81/9-SDS concealed flanges, 3.6%)
2 @ 8' 6 1/2"	3" seat	1 1/4"	435	1,208	**1,643**	Column Bm #6-2 (hung on the post's face, in an HUCQ1.81/9-SDS concealed flanges, 18%)

Total = the governing ASD combination at that support; the category columns are service loads.

Lateral Bracing	Bracing Intervals	Comments
Top Edge (Lu)	continuous	braced by the sheathing
Bottom Edge (Lu)	8' 6 1/2" o/c	used for C_L only where the bottom edge is in compression

Vertical Loads	Location	Trib. Width	Dead (0.90)	Floor Live (1.00)	Comments
0 - Self Weight (PLF)	0 to 8' 6 1/2"	N/A	7.1	--	
1 - Uniform (PLF)	4' 6" to 8' 6 1/2"	N/A	85.4	255	Linked from: Joist #3, Support 2
2 - Uniform (PLF)	0 to 4' 6"	N/A	85.4	255	Linked from: Joist #2, Support 2
3 - Uniform (PLF)	0 to 4' 6"	N/A	33.5	100	Linked from: Joist #13, Support 1

Shear, Moment and Deflection

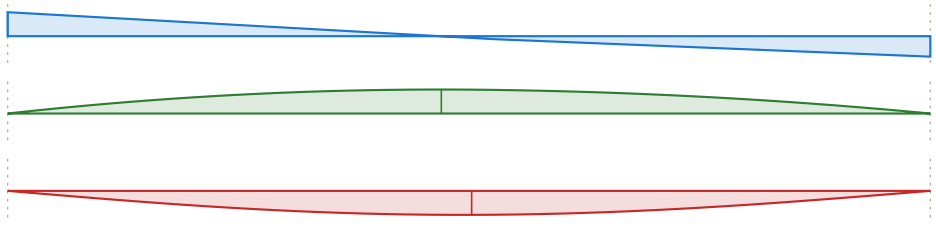

Shear (lbs)
D+L
max 1,927 @ 0

Moment (ft-lbs)
D+L
max 3,859 @ 4' 3/16"

Deflection (in)
D+L
0.063 in down @ 4' 3 9/16"
limit 0.569 in on the span

Beam #24

(1) 6x10 DF-L No. 2 (5 1/2" x 9 1/2")

Level: Foundation | Member type: Beam (Roof Beam) | Length: 5' | 2018 IRC | 2018 NDS | ASD

PASSED

Controls: Moment 64% used
Section adequacy 35.5% (capacity to spare)

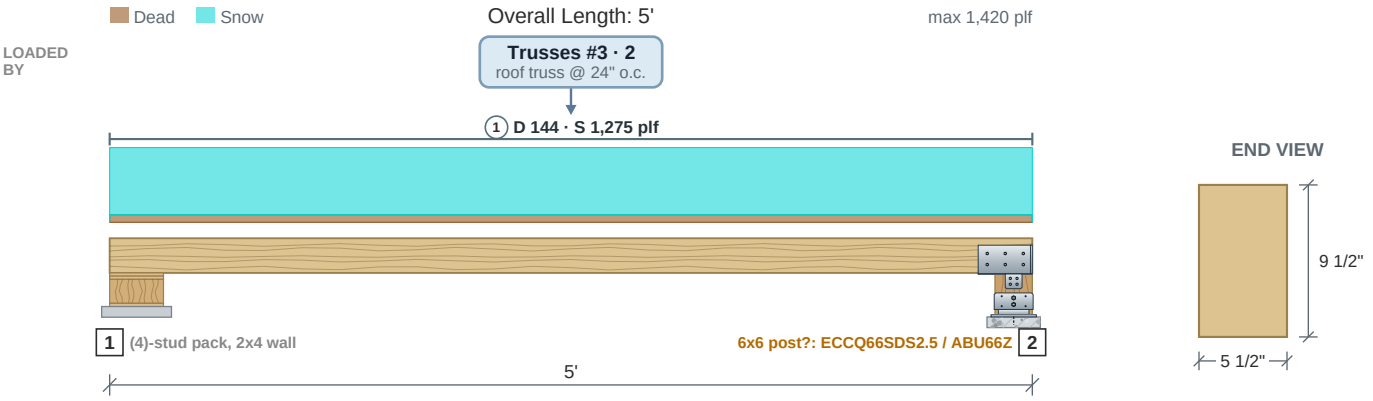

Drawing is conceptual. Locations are measured from the left end of the member; all dimensions are horizontal.

Design Results	Actual @ Location	Allowed	Result	LDF	Load Combination
Member Reaction (lbs)	3,578 @ 0	12,031 (3 1/2")	Passed (30% used)	--	
Plate Bearing (psi)	186 @ 0	692 (2x4 wall, DF-L #2)	Passed (27% used)	--	
Shear (lbs)	2,237 @ 11 1/4"	6,810	Passed (33% used)	1.15	D+S
Moment (Ft-lbs)	4,473 @ 2' 6"	6,937	Passed (64% used)	1.15	D+S
Live Load Defl. (in)	0.035 @ 2' 6"	0.25	Passed (L/1,710)	--	S
Total Load Defl. (in)	0.039 @ 2' 6"	0.333	Passed (L/1,523)	--	D+S

- Deflection criteria (IRC Table R301.7): floor live alone L/360; roof live or snow alone L/240; dead plus live L/180.
- Bending adjustment factors: CD = 1.15, CL = 1.00 (D+S).
- Beam stability: each moment checked against the bracing of its compression edge (CL = 1.00 where braced).
- Member self weight of 11.9 plf is included.
- Calculations per NDS 2018, ASD, every load combination with its own load duration factor.

	Bearing Length		Loads to Supports (lbs)			
Supports	**Provided**	**Required**	**Dead**	**Snow**	**Total**	**Load goes to**
1 @ 0	3 1/2"	1 1/16"	391	3,188	**3,578**	SpotFtg Bm #24-1 (in a 2x4 stud wall 10 ft tall (the default), on a (4)-stud pack -- no post cap)
2 @ 5'	8 1/2" seat	1 1/16"	391	3,188	**3,578**	SpotFtg Bm #24-2 (6x6 post? (max 10 ft, 78%): ECCQ66SDS2.5 / ABU66Z)

Total = the governing ASD combination at that support; the category columns are service loads.

Lateral Bracing	Bracing Intervals	Comments
Top Edge (Lu)	continuous	braced by the sheathing
Bottom Edge (Lu)	5' o/c	used for C_L only where the bottom edge is in compression

Vertical Loads	Location	Trib. Width	Dead (0.90)	Snow (1.15)	Comments
0 - Self Weight (PLF)	0 to 5'	N/A	11.9	--	
1 - Uniform (PLF)	0 to 5'	N/A	144.5	1,275	Linked from: Trusses #3, Support 2

Shear, Moment and Deflection

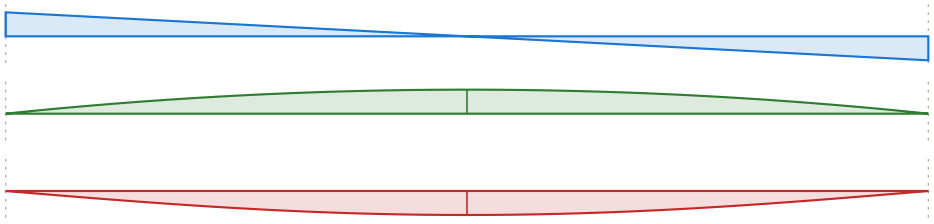

Shear (lbs)
D+S
max 3,579 @ 0

Moment (ft-lbs)
D+S
max 4,473 @ 2' 6"

Deflection (in)
D+S
0.039 in down @ 2' 6"
limit 0.333 in on the span

Beam #25

(1) 6x10 DF-L No. 2 (5 1/2" x 9 1/2")

Level: Foundation | Member type: Beam (Roof Beam) | Length: 5' | 2018 IRC | 2018 NDS | ASD

PASSED

Controls: Moment 64% used
Section adequacy 35.5% (capacity to spare)

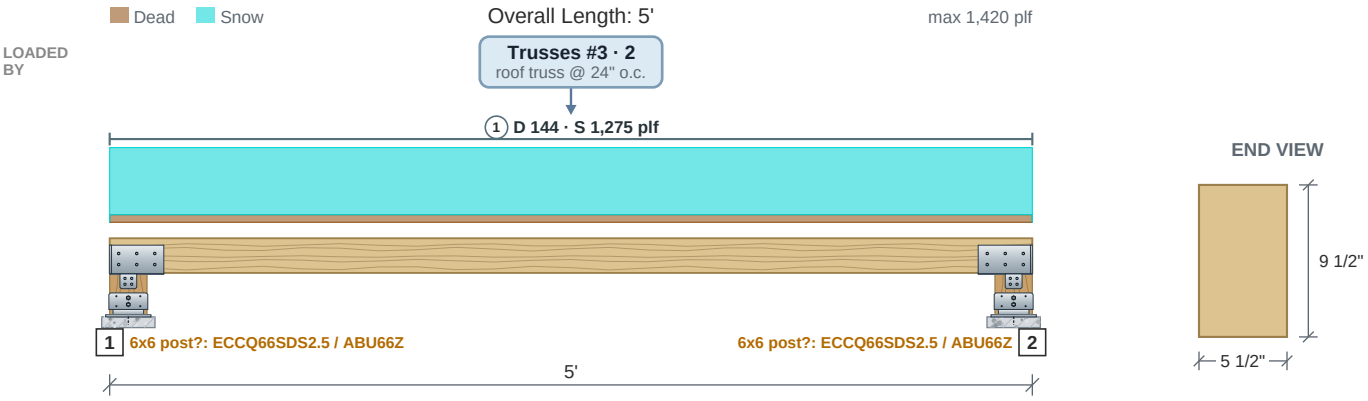

Drawing is conceptual. Locations are measured from the left end of the member; all dimensions are horizontal.

Design Results	Actual @ Location	Allowed	Result	LDF	Load Combination
Member Reaction (lbs)	3,578 @ 0	29,219 (8 1/2")	Passed (12% used)	--	
Shear (lbs)	2,237 @ 11 1/4"	6,810	Passed (33% used)	1.15	D+S
Moment (Ft-lbs)	4,473 @ 2' 6"	6,937	Passed (64% used)	1.15	D+S
Live Load Defl. (in)	0.035 @ 2' 6"	0.25	Passed (L/1,710)	--	S
Total Load Defl. (in)	0.039 @ 2' 6"	0.333	Passed (L/1,523)	--	D+S

- Deflection criteria (IRC Table R301.7): floor live alone L/360; roof live or snow alone L/240; dead plus live L/180.
- Bending adjustment factors: CD = 1.15, CL = 1.00 (D+S).
- Beam stability: each moment checked against the bracing of its compression edge (CL = 1.00 where braced).
- Member self weight of 11.9 plf is included.
- Calculations per NDS 2018, ASD, every load combination with its own load duration factor.

	Bearing Length		Loads to Supports (lbs)			
Supports	**Provided**	**Required**	**Dead**	**Snow**	**Total**	**Load goes to**
1 @ 0	8 1/2" seat	1 1/16"	391	3,188	**3,578**	SpotFtg Bm #25-1 (6x6 post? (max 10 ft, 78%): ECCQ66SDS2.5 / ABU66Z)
2 @ 5'	8 1/2" seat	1 1/16"	391	3,188	**3,578**	SpotFtg Bm #25-2 (6x6 post? (max 10 ft, 78%): ECCQ66SDS2.5 / ABU66Z)

Total = the governing ASD combination at that support; the category columns are service loads.

Lateral Bracing	Bracing Intervals	Comments
Top Edge (Lu)	continuous	braced by the sheathing
Bottom Edge (Lu)	5' o/c	used for C_L only where the bottom edge is in compression

Vertical Loads	Location	Trib. Width	Dead (0.90)	Snow (1.15)	Comments
0 - Self Weight (PLF)	0 to 5'	N/A	11.9	--	
1 - Uniform (PLF)	0 to 5'	N/A	144.5	1,275	Linked from: Trusses #3, Support 2

Shear, Moment and Deflection

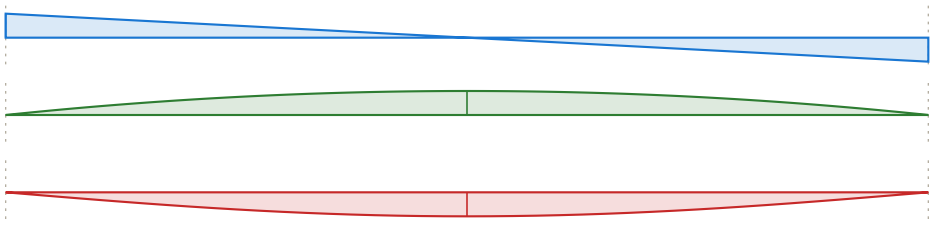

Shear (lbs)
D+S
max 3,579 @ 0

Moment (ft-lbs)
D+S
max 4,473 @ 2' 6"

Deflection (in)
D+S
0.039 in down @ 2' 6"
limit 0.333 in on the span

Beam #26

(1) 6x10 DF-L No. 2 (5 1/2" x 9 1/2")

Level: Foundation | Member type: Beam (Roof Beam) | Length: 5' | 2018 IRC | 2018 NDS | ASD

PASSED

Controls: Moment 54% used
Section adequacy 46.5% (capacity to spare)

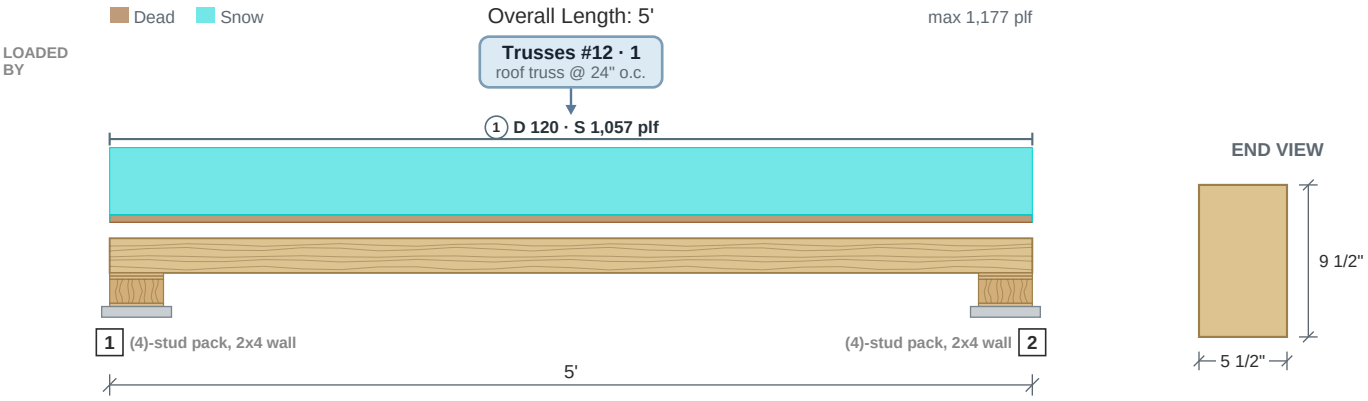

Drawing is conceptual. Locations are measured from the left end of the member; all dimensions are horizontal.

Design Results	Actual @ Location	Allowed	Result	LDF	Load Combination
Member Reaction (lbs)	2,972 @ 0	12,031 (3 1/2")	Passed (25% used)	--	
Plate Bearing (psi)	154 @ 0	692 (2x4 wall, DF-L #2)	Passed (22% used)	--	
Shear (lbs)	1,857 @ 11 1/4"	6,810	Passed (27% used)	1.15	D+S
Moment (Ft-lbs)	3,715 @ 2' 6"	6,937	Passed (54% used)	1.15	D+S
Live Load Defl. (in)	0.029 @ 2' 6"	0.25	Passed (L/2,062)	--	S
Total Load Defl. (in)	0.033 @ 2' 6"	0.333	Passed (L/1,834)	--	D+S

- Deflection criteria (IRC Table R301.7): floor live alone L/360; roof live or snow alone L/240; dead plus live L/180.
- Bending adjustment factors: CD = 1.15, CL = 1.00 (D+S).
- Beam stability: each moment checked against the bracing of its compression edge (CL = 1.00 where braced).
- Member self weight of 11.9 plf is included.
- Calculations per NDS 2018, ASD, every load combination with its own load duration factor.

	Bearing Length		Loads to Supports (lbs)			
Supports	**Provided**	**Required**	**Dead**	**Snow**	**Total**	**Load goes to**
1 @ 0	3 1/2"	7/8"	329	2,642	**2,972**	SpotFtg Bm #26-1 (in a 2x4 stud wall 10 ft tall (the default), on a (4)-stud pack -- no post cap)
2 @ 5'	3 1/2"	7/8"	329	2,642	**2,972**	SpotFtg Bm #26-2 (in a 2x4 stud wall 10 ft tall (the default), on a (4)-stud pack -- no post cap)

Total = the governing ASD combination at that support; the category columns are service loads.

Lateral Bracing	Bracing Intervals	Comments
Top Edge (Lu)	continuous	braced by the sheathing
Bottom Edge (Lu)	5' o/c	used for C_L only where the bottom edge is in compression

Vertical Loads	Location	Trib. Width	Dead (0.90)	Snow (1.15)	Comments
0 - Self Weight (PLF)	0 to 5'	N/A	11.9	--	
1 - Uniform (PLF)	0 to 5'	N/A	119.8	1,057	Linked from: Trusses #12, Support 1

Shear, Moment and Deflection

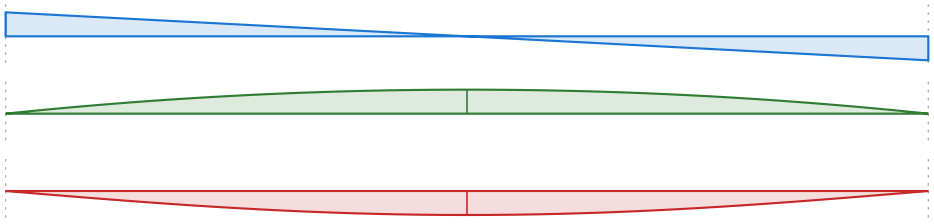

Shear (lbs)
D+S
max 2,972 @ 0

Moment (ft-lbs)
D+S
max 3,714 @ 2' 6"

Deflection (in)
D+S
0.033 in down @ 2' 6"
limit 0.333 in on the span

Beam #27

(1) 6x10 DF-L No. 2 (5 1/2" x 9 1/2")

Level: Foundation | Member type: Beam (Roof Beam) | Length: 5' | 2018 IRC | 2018 NDS | ASD

PASSED

Controls: Moment 54% used

Section adequacy 46.5% (capacity to spare)

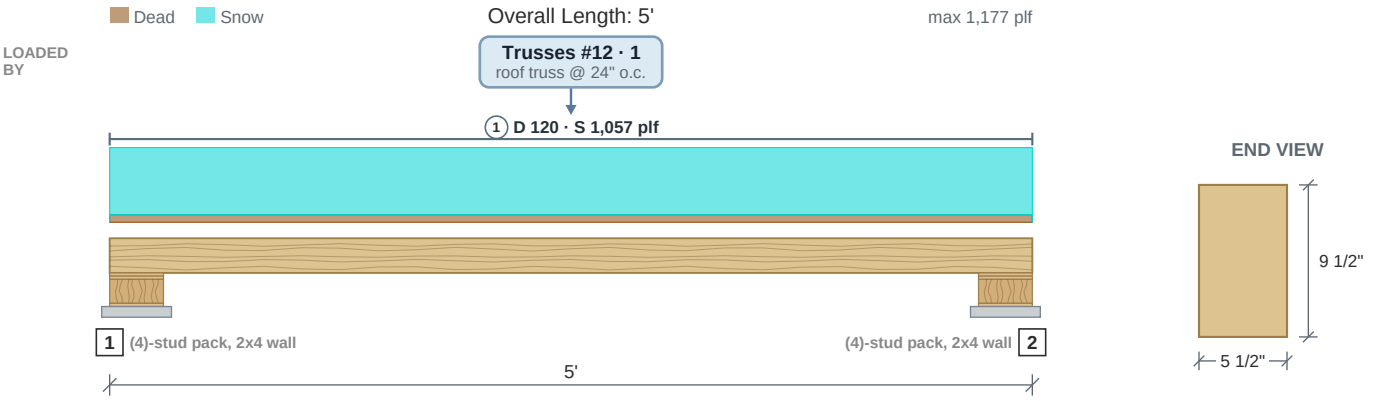

Drawing is conceptual. Locations are measured from the left end of the member; all dimensions are horizontal.

Design Results	Actual @ Location	Allowed	Result	LDF	Load Combination
Member Reaction (lbs)	2,972 @ 0	12,031 (3 1/2")	Passed (25% used)	--	
Plate Bearing (psi)	154 @ 0	692 (2x4 wall, DF-L #2)	Passed (22% used)	--	
Shear (lbs)	1,857 @ 11 1/4"	6,810	Passed (27% used)	1.15	D+S
Moment (Ft-lbs)	3,715 @ 2' 6"	6,937	Passed (54% used)	1.15	D+S
Live Load Defl. (in)	0.029 @ 2' 6"	0.25	Passed (L/2,062)	--	S
Total Load Defl. (in)	0.033 @ 2' 6"	0.333	Passed (L/1,834)	--	D+S

- Deflection criteria (IRC Table R301.7): floor live alone L/360; roof live or snow alone L/240; dead plus live L/180.
- Bending adjustment factors: CD = 1.15, CL = 1.00 (D+S).
- Beam stability: each moment checked against the bracing of its compression edge (CL = 1.00 where braced).
- Member self weight of 11.9 plf is included.
- Calculations per NDS 2018, ASD, every load combination with its own load duration factor.

	Bearing Length		Loads to Supports (lbs)			
Supports	**Provided**	**Required**	**Dead**	**Snow**	**Total**	**Load goes to**
1 @ 0	3 1/2"	7/8"	329	2,642	**2,972**	SpotFtg Bm #27-1 (in a 2x4 stud wall 10 ft tall (the default), on a (4)-stud pack -- no post cap)
2 @ 5'	3 1/2"	7/8"	329	2,642	**2,972**	SpotFtg Bm #27-2 (in a 2x4 stud wall 10 ft tall (the default), on a (4)-stud pack -- no post cap)

Total = the governing ASD combination at that support; the category columns are service loads.

Lateral Bracing	Bracing Intervals	Comments
Top Edge (Lu)	continuous	braced by the sheathing
Bottom Edge (Lu)	5' o/c	used for C_L only where the bottom edge is in compression

Vertical Loads	Location	Trib. Width	Dead (0.90)	Snow (1.15)	Comments
0 - Self Weight (PLF)	0 to 5'	N/A	11.9	--	
1 - Uniform (PLF)	0 to 5'	N/A	119.8	1,057	Linked from: Trusses #12, Support 1

Shear, Moment and Deflection

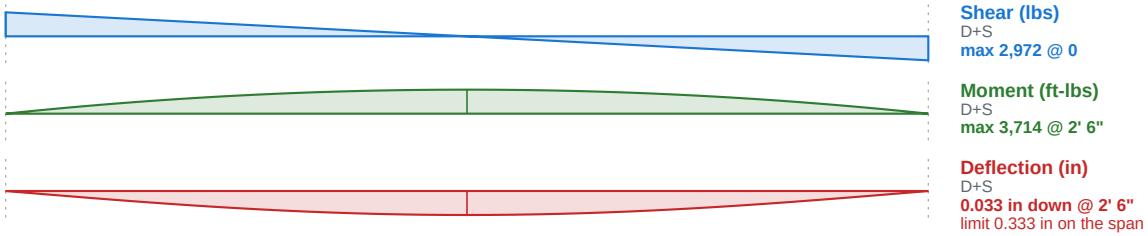

Shear (lbs)
D+S
max 2,972 @ 0

Moment (ft-lbs)
D+S
max 3,714 @ 2' 6"

Deflection (in)
D+S
0.033 in down @ 2' 6"
limit 0.333 in on the span

Beam #28

PASSED

(3) 1 3/4" x 9 1/2" 2.0E Microlam LVL (Weyerhaeuser)

Level: Foundation | Member type: Beam (Roof Beam) | Length: 6' | 2018 IRC | 2018 NDS | ASD

Controls: Bearing on the plates 75% used
Section adequacy 5.2% (capacity to spare)

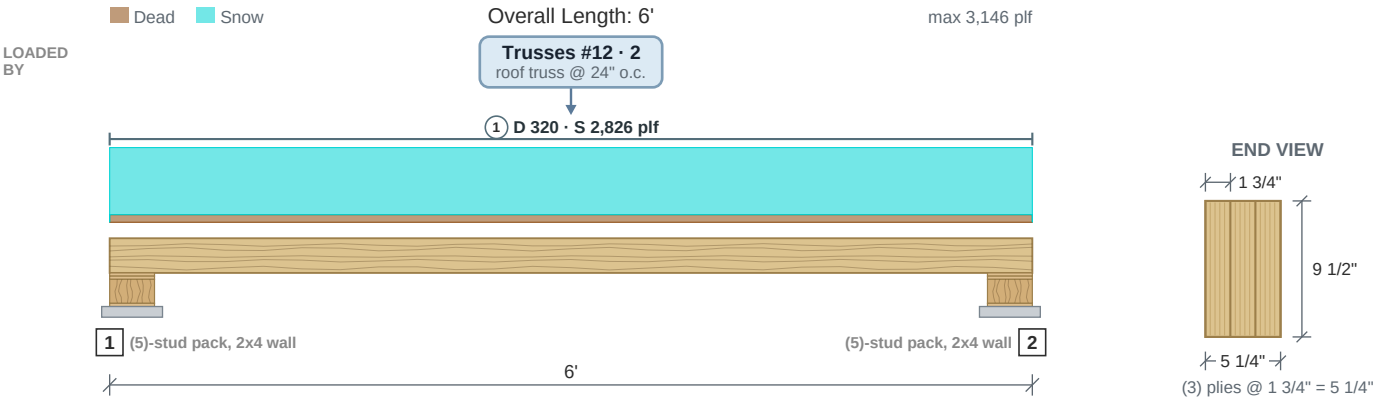

Drawing is conceptual. Locations are measured from the left end of the member; all dimensions are horizontal.

Design Results	Actual @ Location	Allowed	Result	LDF	Load Combination
Member Reaction (lbs)	9,482 @ 0	13,781 (3 1/2")	Passed (69% used)	--	
Plate Bearing (psi)	516 @ 0	692 (2x4 wall, DF-L #2)	Passed (75% used)	--	
Shear (lbs)	6,519 @ 11 1/4"	10,899	Passed (60% used)	1.15	D+S
Moment (Ft-lbs)	14,223 @ 3'	20,311	Passed (70% used)	1.15	D+S
Live Load Defl. (in)	0.139 @ 3'	0.3	Passed (L/517)	--	S
Total Load Defl. (in)	0.156 @ 3'	0.4	Passed (L/462)	--	D+S

- Deflection criteria (IRC Table R301.7): floor live alone L/360; roof live or snow alone L/240; dead plus live L/180.
- Bending adjustment factors: CD = 1.15, CV = 1.032, CL = 1.00 (D+S).
- Beam stability: each moment checked against the bracing of its compression edge (CL = 1.00 where braced).
- Member self weight of 14.5 plf is included.
- Calculations per NDS 2018 and Weyerhaeuser ICC-ES ESR-1387, ASD, every load combination with its own load duration factor.

	Bearing Length		Loads to Supports (lbs)			
Supports	**Provided**	**Required**	**Dead**	**Snow**	**Total**	**Load goes to**
1 @ 0	3 1/2"	2 7/16"	1,004	8,478	**9,482**	SpotFtg Bm #28-1 (in a 2x4 stud wall 10 ft tall (the default), on a (5)-stud pack -- no post cap)
2 @ 6'	3 1/2"	2 7/16"	1,004	8,478	**9,482**	SpotFtg Bm #28-2 (in a 2x4 stud wall 10 ft tall (the default), on a (5)-stud pack -- no post cap)

Total = the governing ASD combination at that support; the category columns are service loads.

Lateral Bracing	Bracing Intervals	Comments
Top Edge (Lu)	continuous	braced by the sheathing
Bottom Edge (Lu)	6' o/c	used for C_L only where the bottom edge is in compression

Vertical Loads	Location	Trib. Width	Dead (0.90)	Snow (1.15)	Comments
0 - Self Weight (PLF)	0 to 6'	N/A	14.5	--	
1 - Uniform (PLF)	0 to 6'	N/A	320.3	2,826	Linked from: Trusses #12, Support 2

Shear, Moment and Deflection

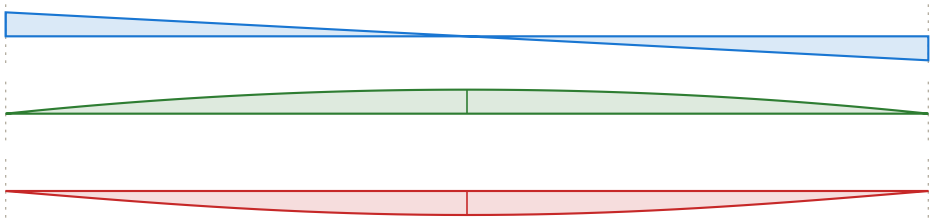

Shear (lbs)
D+S
max 9,482 @ 0

Moment (ft-lbs)
D+S
max 14,223 @ 3'

Deflection (in)
D+S
0.123 in down @ 3'
limit 0.4 in on the span

Beam #29

(1) 6x10 DF-L No. 2 (5 1/2" x 9 1/2")

Level: Foundation | Member type: Beam (Roof Beam) | Length: 5' | 2018 IRC | 2018 NDS | ASD

PASSED

Controls: Moment 96% used
Section adequacy 3.5% (capacity to spare)

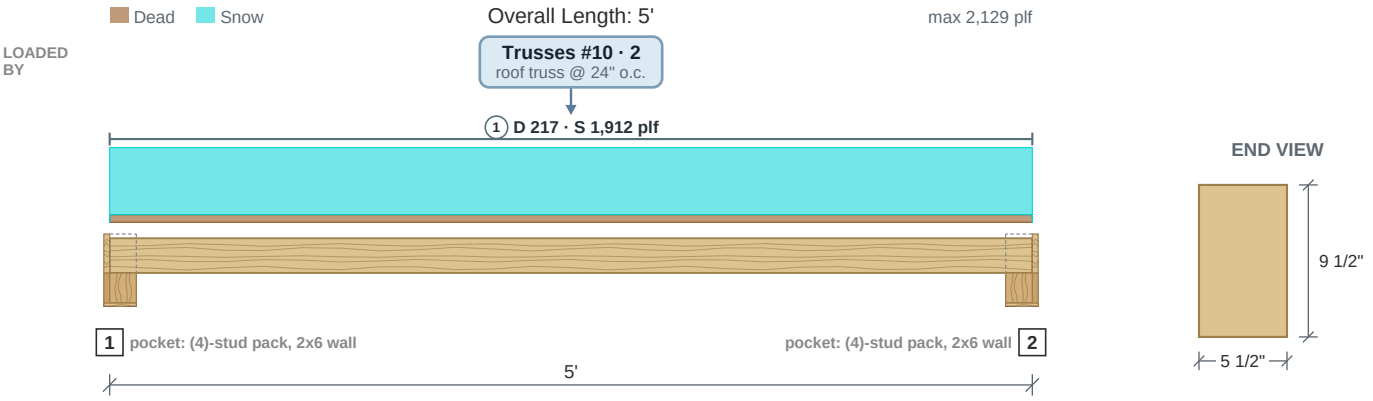

Drawing is conceptual. Locations are measured from the left end of the member; all dimensions are horizontal.

Design Results	Actual @ Location	Allowed	Result	LDF	Load Combination
Member Reaction (lbs)	5,353 @ 0	18,906 (5 1/2")	Passed (28% used)	--	
Plate Bearing (psi)	177 @ 0	668 (2x6 wall, DF-L #2)	Passed (27% used)	--	
Shear (lbs)	3,167 @ 1' 1/4"	6,810	Passed (46% used)	1.15	D+S
Moment (Ft-lbs)	6,691 @ 2' 6"	6,937	Passed (96% used)	1.15	D+S
Live Load Defl. (in)	0.053 @ 2' 6"	0.25	Passed (L/1,140)	--	S
Total Load Defl. (in)	0.059 @ 2' 6"	0.333	Passed (L/1,018)	--	D+S

- Deflection criteria (IRC Table R301.7): floor live alone L/360; roof live or snow alone L/240; dead plus live L/180.
- Bending adjustment factors: CD = 1.15, CL = 1.00 (D+S).
- Beam stability: each moment checked against the bracing of its compression edge (CL = 1.00 where braced).
- Member self weight of 11.9 plf is included.
- Calculations per NDS 2018, ASD, every load combination with its own load duration factor.

	Bearing Length		Loads to Supports (lbs)			
Supports	**Provided**	**Required**	**Dead**	**Snow**	**Total**	**Load goes to**
1 @ 0	5 1/2"	1 9/16"	572	4,781	**5,353**	SpotFtg Bm #29-1 (in a beam pocket in a 2x6 stud wall 10 ft tall (the default), on a (4)-stud pack -- no post cap)
2 @ 5'	5 1/2"	1 9/16"	572	4,781	**5,353**	SpotFtg Bm #29-2 (in a beam pocket in a 2x6 stud wall 10 ft tall (the default), on a (4)-stud pack -- no post cap)

Total = the governing ASD combination at that support; the category columns are service loads.

Lateral Bracing	Bracing Intervals	Comments
Top Edge (Lu)	continuous	braced by the sheathing
Bottom Edge (Lu)	5' o/c	used for C_L only where the bottom edge is in compression

Vertical Loads	Location	Trib. Width	Dead (0.90)	Snow (1.15)	Comments
0 - Self Weight (PLF)	0 to 5'	N/A	11.9	--	
1 - Uniform (PLF)	0 to 5'	N/A	216.8	1,912	Linked from: Trusses #10, Support 2

Shear, Moment and Deflection

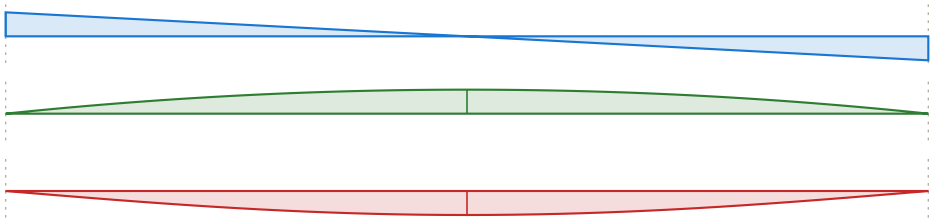

Shear (lbs)
D+S
max 5,353 @ 0

Moment (ft-lbs)
D+S
max 6,691 @ 2' 6"

Deflection (in)
D+S
0.059 in down @ 2' 6"
limit 0.333 in on the span

Girder #1

2-ply roof girder truss (generic)

Level: Roof | Length: 10' | 2018 IRC | 2018 NDS | ASD

LOADS ONLY

Generic member for linked loads
no member size or design check

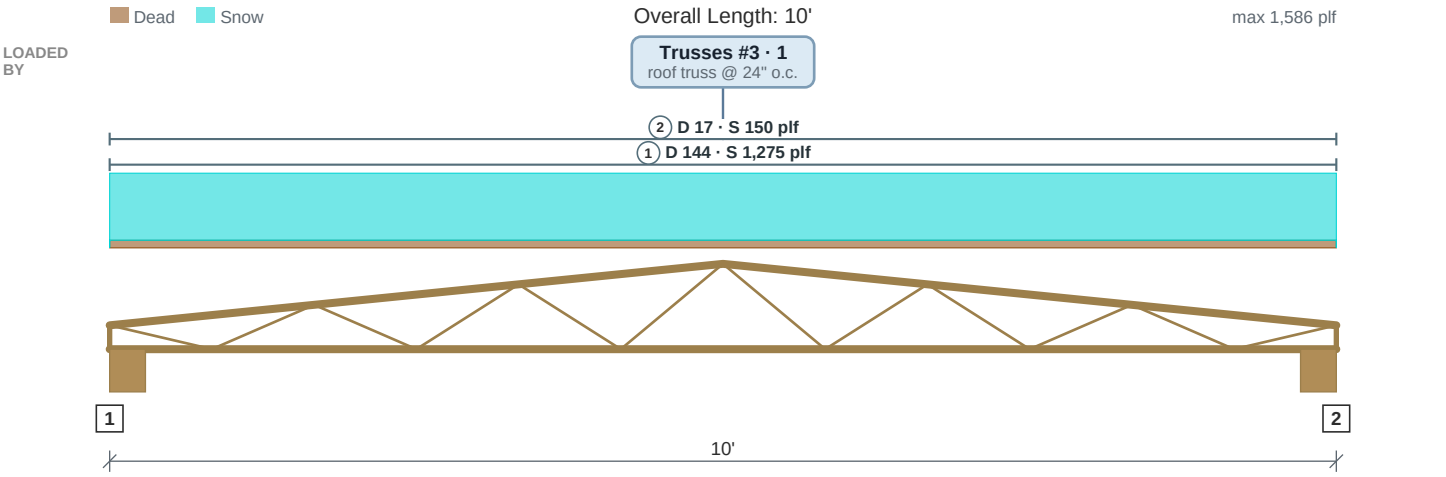

Drawing is conceptual. Locations are measured from the left end of the member; all dimensions are horizontal.

- A generic 2-ply roof girder truss, modeled so the loads it carries reach the members and walls that support it as linked loads. The size in the model is a placeholder, so no size or design check is shown; the girder truss itself is designed by the truss manufacturer.

	Loads to Supports (lbs)			
Supports	**Dead**	**Snow**	**Total**	**Load goes to**
1 @ 0	808	7,125	**7,932**	SpotFtg Gdr #1-1 (6x6 post? (max 10 ft, 53%): truss layout / ABU66Z)
2 @ 10'	808	7,125	**7,932**	SpotFtg Gdr #1-2 (6x6 post? (max 10 ft, 53%): truss layout / ABU66Z)

Total = the governing ASD combination at that support; the category columns are service loads.

Vertical Loads	Location	Trib. Width	Dead (0.90)	Snow (1.15)	Comments
1 - Uniform (PLF)	0 to 10'	N/A	144.5	1,275	Linked from: Trusses #3, Support 1
2 - Uniform (PLF)	0 to 10'	N/A	17	150	

Header #1

(1) 4x8 DF-L No. 2 (3 1/2" x 7 1/4")

Level: Headers - 1st Level | Member type: Header (Roof Beam) | Length: 4' 6" | 2018 IRC | 2018 NDS | ASD

PASSED

Controls: Moment 93% used
Section adequacy 7.1% (capacity to spare)

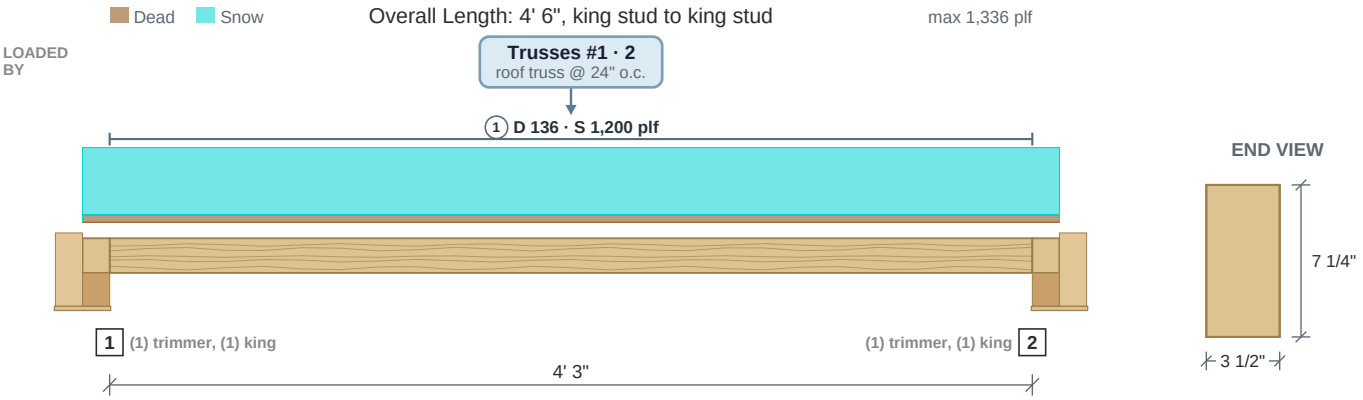

Drawing is conceptual. Locations are measured from the left end of the member; all dimensions are horizontal.

Design Results	Actual @ Location	Allowed	Result	LDF	Load Combination
Member Reaction (lbs)	2,851 @ 0	3,281 (1 1/2")	Passed (87% used)	--	
Shear (lbs)	2,041 @ 3' 7 3/4"	3,502	Passed (58% used)	1.15	D+S
Moment (Ft-lbs)	3,193 @ 2' 1 1/2"	3,438	Passed (93% used)	1.15	D+S
Live Load Defl. (in)	0.055 @ 2' 2 1/8"	0.218	Passed (2L/952)	--	S
Total Load Defl. (in)	0.062 @ 2' 2 1/8"	0.291	Passed (2L/851)	--	D+S

- Deflection criteria (IRC Table R301.7): floor live alone L/360; roof live or snow alone L/240; dead plus live L/180.
- Bending adjustment factors: CD = 1.15, CF = 1.30, CL = 1.00 (D+S).
- Beam stability: each moment checked against the bracing of its compression edge (CL = 1.00 where braced).
- Member self weight of 5.8 plf is included.
- Calculations per NDS 2018, ASD, every load combination with its own load duration factor.

	Bearing Length		Loads to Supports (lbs)			
Supports	**Provided**	**Required**	**Dead**	**Snow**	**Total**	**Load goes to**
1 @ 0	1 1/2"	1 5/16"	319	2,700	**3,019**	Bearing wall (marked, trimmers) -- on (1) trimmer, (1) king stud
2 @ 4' 3"	1 1/2"	1 5/16"	319	2,700	**3,019**	Bearing wall (marked, trimmers) -- on (1) trimmer, (1) king stud

Total = the governing ASD combination at that support; the category columns are service loads.

Lateral Bracing	Bracing Intervals	Comments
Top Edge (Lu)	continuous	braced by the sheathing
Bottom Edge (Lu)	4' 3" o/c	used for C_L only where the bottom edge is in compression

Vertical Loads	Location	Trib. Width	Dead (0.90)	Snow (1.15)	Comments
0 - Self Weight (PLF)	0 to 4' 3"	N/A	5.8	--	
1 - Uniform (PLF)	0 to 4' 3"	N/A	136	1,200	Linked from: Trusses #1, Support 2

Shear, Moment and Deflection

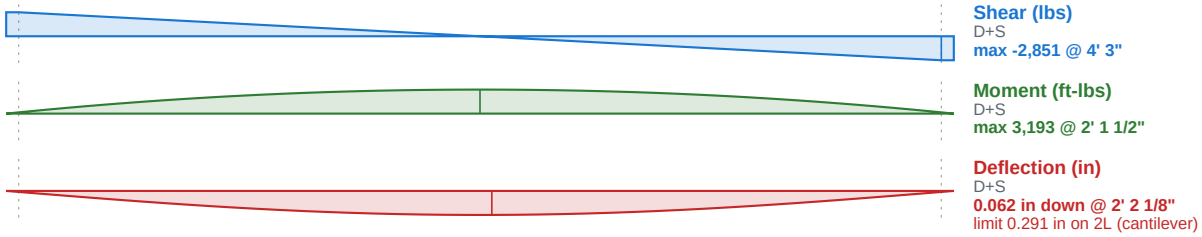

Header #2

PASSED

(2) 1 3/4" x 9 1/4" 2.0E Microlam LVL (Weyerhaeuser)

Level: Headers - 1st Level | Member type: Header (Roof Beam) | Length: 9' 6" | 2018 IRC | 2018 NDS | ASD

Controls: Bearing 80% used
Section adequacy 19.8% (capacity to spare)

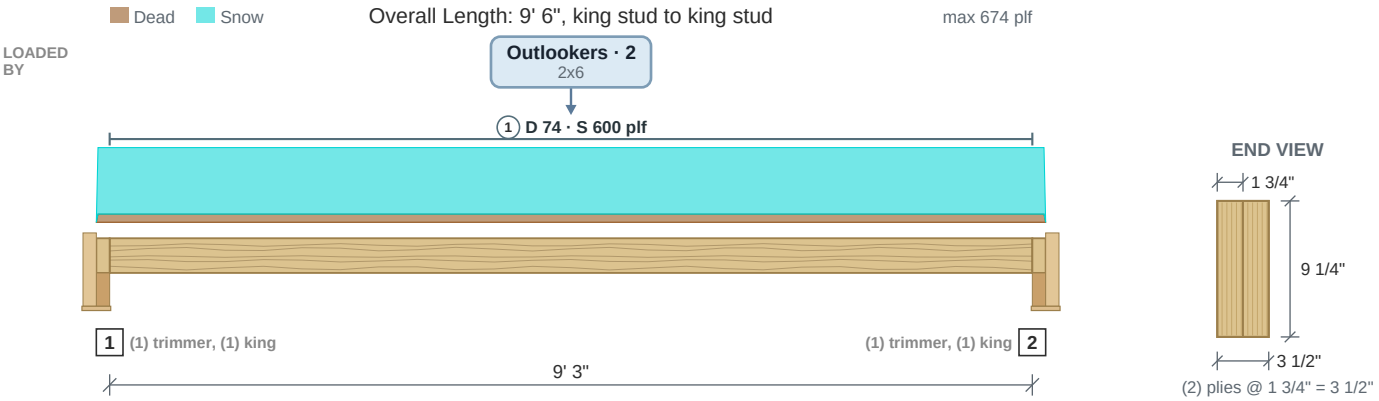

Drawing is conceptual. Locations are measured from the left end of the member; all dimensions are horizontal.

Design Results	Actual @ Location	Allowed	Result	LDF	Load Combination
Member Reaction (lbs)	3,159 @ 0	3,938 (1 1/2")	Passed (80% used)	--	
Shear (lbs)	2,633 @ 9 1/4"	7,075	Passed (37% used)	1.15	D+S
Moment (Ft-lbs)	7,468 @ 4' 7 1/2"	12,884	Passed (58% used)	1.15	D+S
Live Load Defl. (in)	0.247 @ 4' 7 1/2"	0.468	Passed (2L/454)	--	S
Total Load Defl. (in)	0.281 @ 4' 7 1/2"	0.624	Passed (2L/399)	--	D+S

- Deflection criteria (IRC Table R301.7): floor live alone L/360; roof live or snow alone L/240; dead plus live L/180.
- Bending adjustment factors: CD = 1.15, CV = 1.036, CL = 1.00 (D+S).
- Beam stability: each moment checked against the bracing of its compression edge (CL = 1.00 where braced).
- Member self weight of 9.4 plf is included.
- Calculations per NDS 2018 and Weyerhaeuser ICC-ES ESR-1387, ASD, every load combination with its own load duration factor.

	Bearing Length		Loads to Supports (lbs)			
Supports	**Provided**	**Required**	**Dead**	**Snow**	**Total**	**Load goes to**
1 @ 0	1 1/2"	1 3/16"	395	2,850	**3,245**	Bearing wall (marked, trimmers) -- on (1) trimmer, (1) king stud -- under the IRC R602.7.5 minimum of 2
2 @ 9' 3"	1 1/2"	1 3/16"	395	2,850	**3,245**	Bearing wall (marked, trimmers) -- on (1) trimmer, (1) king stud -- under the IRC R602.7.5 minimum of 2

Total = the governing ASD combination at that support; the category columns are service loads.

Lateral Bracing	Bracing Intervals	Comments
Top Edge (Lu)	continuous	braced by the sheathing
Bottom Edge (Lu)	9' 3" o/c	used for C_L only where the bottom edge is in compression

Vertical Loads	Location	Trib. Width	Dead (0.90)	Snow (1.15)	Comments
0 - Self Weight (PLF)	0 to 9' 3"	N/A	9.4	--	
1 - Uniform (PLF)	0 to 9' 3"	N/A	73.6	600	Linked from: Outlookers, Support 2

Shear, Moment and Deflection

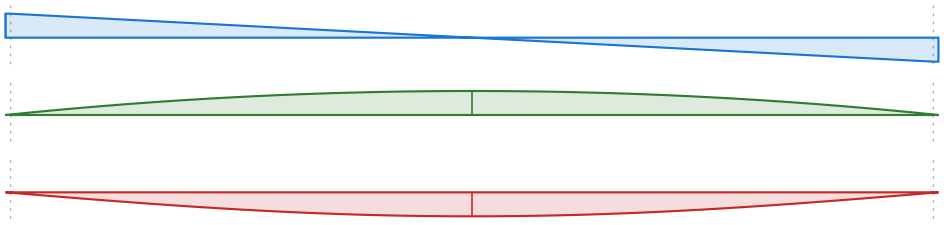

Shear (lbs)
D+S
max 3,159 @ -5/8"

Moment (ft-lbs)
D+S
max 7,468 @ 4' 7 1/2"

Deflection (in)
D+S
0.255 in down @ 4' 7 1/2"
limit 0.624 in on 2L (cantilever)

Header #3

(1) 4x8 DF-L No. 2 (3 1/2" x 7 1/4")

Level: Headers - 1st Level | Member type: Header (Roof Beam) | Length: 3' 2" | 2018 IRC | 2018 NDS | ASD

PASSED

Controls: Bearing 82% used
Section adequacy 18.1% (capacity to spare)

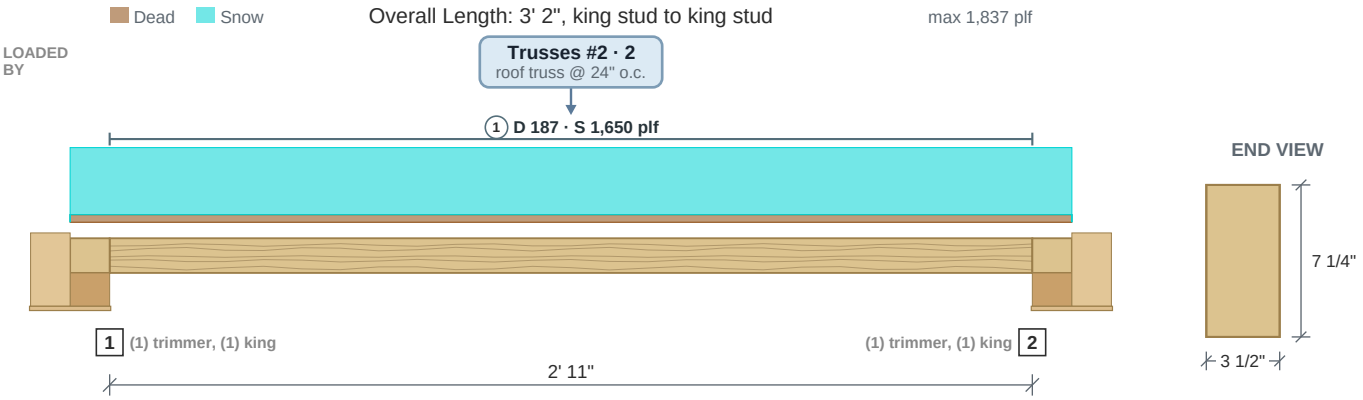

Drawing is conceptual. Locations are measured from the left end of the member; all dimensions are horizontal.

Design Results	Actual @ Location	Allowed	Result	LDF	Load Combination
Member Reaction (lbs)	2,688 @ 0	3,281 (1 1/2")	Passed (82% used)	--	
Shear (lbs)	1,574 @ 7 1/4"	3,502	Passed (45% used)	1.15	D+S
Moment (Ft-lbs)	2,110 @ 1' 5 1/2"	3,438	Passed (61% used)	1.15	D+S
Live Load Defl. (in)	0.018 @ 1' 5 15/16"	0.151	Passed (2L/2,075)	--	S
Total Load Defl. (in)	0.02 @ 1' 5 15/16"	0.202	Passed (2L/1,858)	--	D+S

- Deflection criteria (IRC Table R301.7): floor live alone L/360; roof live or snow alone L/240; dead plus live L/180.
- Bending adjustment factors: CD = 1.15, CF = 1.30, CL = 1.00 (D+S).
- Beam stability: each moment checked against the bracing of its compression edge (CL = 1.00 where braced).
- Member self weight of 5.8 plf is included.
- Calculations per NDS 2018, ASD, every load combination with its own load duration factor.

	Bearing Length		Loads to Supports (lbs)			
Supports	**Provided**	**Required**	**Dead**	**Snow**	**Total**	**Load goes to**
1 @ 0	1 1/2"	1 1/4"	305	2,613	**2,918**	Bearing wall (marked, trimmers) -- on (1) trimmer, (1) king stud
2 @ 2' 11"	1 1/2"	1 1/4"	305	2,613	**2,918**	Bearing wall (marked, trimmers) -- on (1) trimmer, (1) king stud

Total = the governing ASD combination at that support; the category columns are service loads.

Lateral Bracing	Bracing Intervals	Comments
Top Edge (Lu)	continuous	braced by the sheathing
Bottom Edge (Lu)	2' 11" o/c	used for C_L only where the bottom edge is in compression

Vertical Loads	Location	Trib. Width	Dead (0.90)	Snow (1.15)	Comments
0 - Self Weight (PLF)	0 to 2' 11"	N/A	5.8	--	
1 - Uniform (PLF)	0 to 2' 11"	N/A	187	1,650	Linked from: Trusses #2, Support 2

Shear, Moment and Deflection

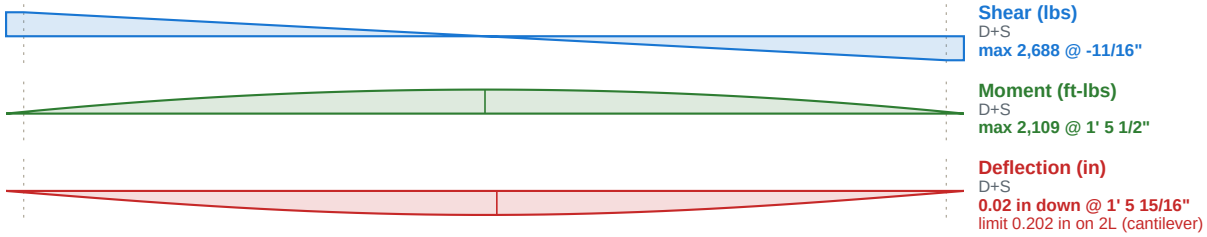

Header #4

PASSED

(1) 4x8 DF-L No. 2 (3 1/2" x 7 1/4")

Controls: Bearing 82% used

Level: Headers - 1st Level | Member type: Header (Roof Beam) | Length: 3' 2" | 2018 IRC | 2018 NDS | ASD

Section adequacy 18.1% (capacity to spare)

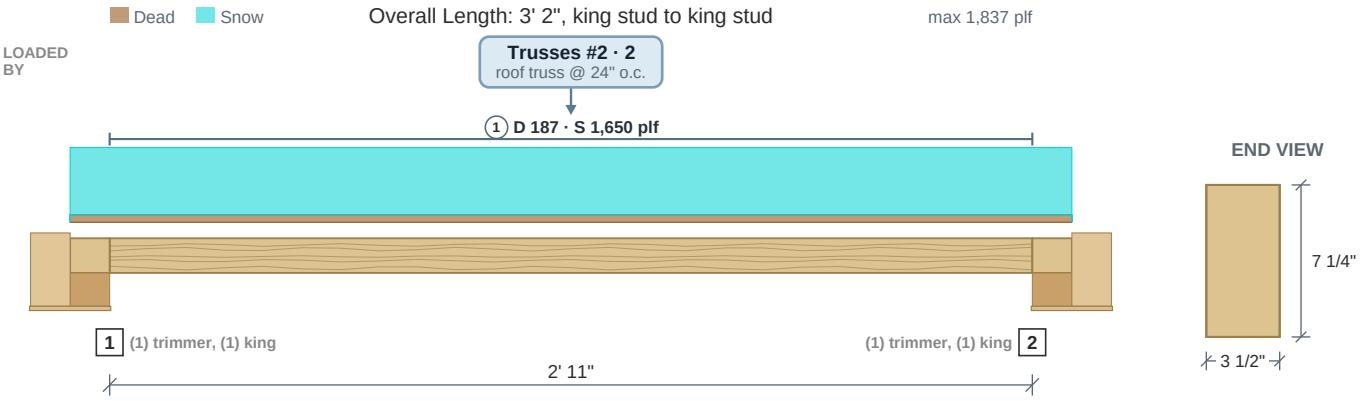

Drawing is conceptual. Locations are measured from the left end of the member; all dimensions are horizontal.

Design Results	Actual @ Location	Allowed	Result	LDF	Load Combination
Member Reaction (lbs)	2,688 @ 0	3,281 (1 1/2")	Passed (82% used)	--	
Shear (lbs)	1,574 @ 7 1/4"	3,502	Passed (45% used)	1.15	D+S
Moment (Ft-lbs)	2,110 @ 1' 5 1/2"	3,438	Passed (61% used)	1.15	D+S
Live Load Defl. (in)	0.018 @ 1' 5 15/16"	0.151	Passed (2L/2,075)	--	S
Total Load Defl. (in)	0.02 @ 1' 5 15/16"	0.202	Passed (2L/1,858)	--	D+S

- Deflection criteria (IRC Table R301.7): floor live alone L/360; roof live or snow alone L/240; dead plus live L/180.
- Bending adjustment factors: CD = 1.15, CF = 1.30, CL = 1.00 (D+S).
- Beam stability: each moment checked against the bracing of its compression edge (CL = 1.00 where braced).
- Member self weight of 5.8 plf is included.
- Calculations per NDS 2018, ASD, every load combination with its own load duration factor.

	Bearing Length		Loads to Supports (lbs)			
Supports	**Provided**	**Required**	**Dead**	**Snow**	**Total**	**Load goes to**
1 @ 0	1 1/2"	1 1/4"	305	2,613	**2,918**	Bearing wall (marked, trimmers) -- on (1) trimmer, (1) king stud
2 @ 2' 11"	1 1/2"	1 1/4"	305	2,613	**2,918**	Bearing wall (marked, trimmers) -- on (1) trimmer, (1) king stud

Total = the governing ASD combination at that support; the category columns are service loads.

Lateral Bracing	Bracing Intervals	Comments
Top Edge (Lu)	continuous	braced by the sheathing
Bottom Edge (Lu)	2' 11" o/c	used for C_L only where the bottom edge is in compression

Vertical Loads	Location	Trib. Width	Dead (0.90)	Snow (1.15)	Comments
0 - Self Weight (PLF)	0 to 2' 11"	N/A	5.8	--	
1 - Uniform (PLF)	0 to 2' 11"	N/A	187	1,650	Linked from: Trusses #2, Support 2

Shear, Moment and Deflection

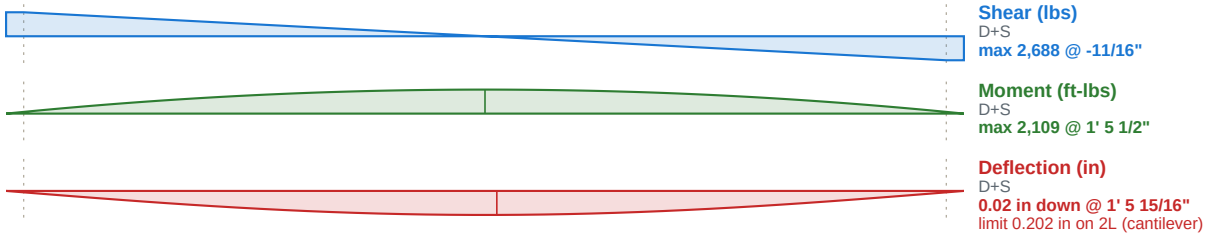

Shear (lbs)
D+S
max 2,688 @ -11/16"

Moment (ft-lbs)
D+S
max 2,109 @ 1' 5 1/2"

Deflection (in)
D+S
0.02 in down @ 1' 5 15/16"
limit 0.202 in on 2L (cantilever)

Header #5

PASSED

(2) 2x10 DF-L No. 2 (1 1/2" x 9 1/4")

Level: Headers - 1st Level | Member type: Header (Roof Beam) | Length: 6' 9 1/2" | 2018 IRC | 2018 NDS | ASD

Controls: Moment 92% used
Section adequacy 7.6% (capacity to spare)

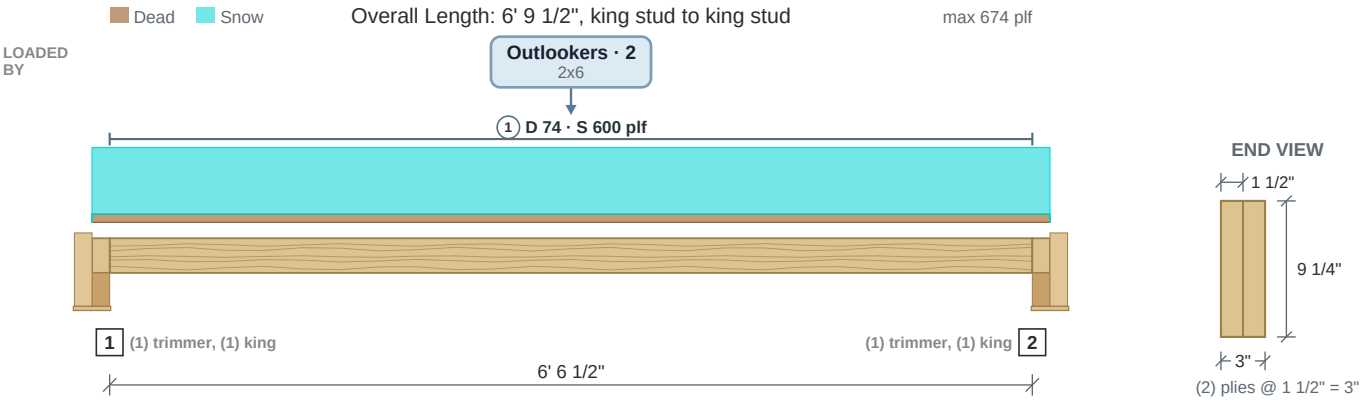

Drawing is conceptual. Locations are measured from the left end of the member; all dimensions are horizontal.

Design Results	Actual @ Location	Allowed	Result	LDF	Load Combination
Member Reaction (lbs)	2,224 @ 0	2,812 (1 1/2")	Passed (79% used)	--	
Shear (lbs)	1,700 @ 5' 9 1/4"	3,830	Passed (44% used)	1.15	D+S
Moment (Ft-lbs)	3,752 @ 3' 3 1/4"	4,059	Passed (92% used)	1.15	D+S
Live Load Defl. (in)	0.083 @ 3' 3 1/4"	0.332	Passed (2L/959)	--	S
Total Load Defl. (in)	0.094 @ 3' 3 1/4"	0.443	Passed (2L/847)	--	D+S

- Deflection criteria (IRC Table R301.7): floor live alone L/360; roof live or snow alone L/240; dead plus live L/180.
- Bending adjustment factors: CD = 1.15, CF = 1.10, CL = 1.00 (D+S).
- Beam stability: each moment checked against the bracing of its compression edge (CL = 1.00 where braced).
- Member self weight of 6.3 plf is included.
- Calculations per NDS 2018, ASD, every load combination with its own load duration factor.

	Bearing Length		Loads to Supports (lbs)			
Supports	**Provided**	**Required**	**Dead**	**Snow**	**Total**	**Load goes to**
1 @ 0	1 1/2"	1 3/16"	272	2,038	**2,309**	Bearing wall (marked, trimmers) -- on (1) trimmer, (1) king stud
2 @ 6' 6 1/2"	1 1/2"	1 3/16"	272	2,038	**2,309**	Bearing wall (marked, trimmers) -- on (1) trimmer, (1) king stud

Total = the governing ASD combination at that support; the category columns are service loads.

Lateral Bracing	Bracing Intervals	Comments
Top Edge (Lu)	continuous	braced by the sheathing
Bottom Edge (Lu)	6' 6 1/2" o/c	used for C_L only where the bottom edge is in compression

Vertical Loads	Location	Trib. Width	Dead (0.90)	Snow (1.15)	Comments
0 - Self Weight (PLF)	0 to 6' 6 1/2"	N/A	6.3	--	
1 - Uniform (PLF)	0 to 6' 6 1/2"	N/A	73.6	600	Linked from: Outlookers, Support 2

Shear, Moment and Deflection

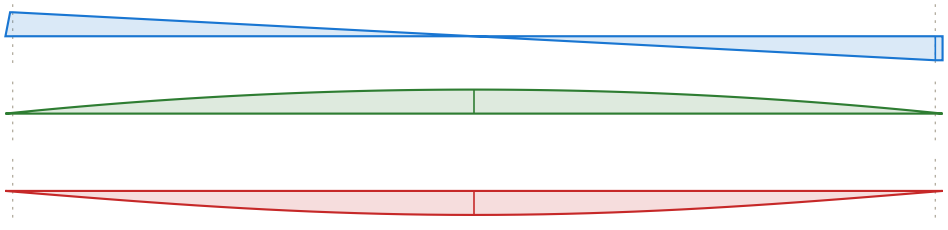

Shear (lbs)
D+S
max -2,224 @ 6' 6 1/2"

Moment (ft-lbs)
D+S
max 3,752 @ 3' 3 1/4"

Deflection (in)
D+S
0.094 in down @ 3' 3 1/4"
limit 0.443 in on 2L (cantilever)

Header #6

PASSED

(3) 1 3/4" x 11 7/8" 2.0E Microlam LVL (Weyerhaeuser)

Level: Headers - 1st Level | Member type: Header (Roof Beam) | Length: 8' | 2018 IRC | 2018 NDS | ASD

Controls: Moment 85% used
Section adequacy 14.9% (capacity to spare)

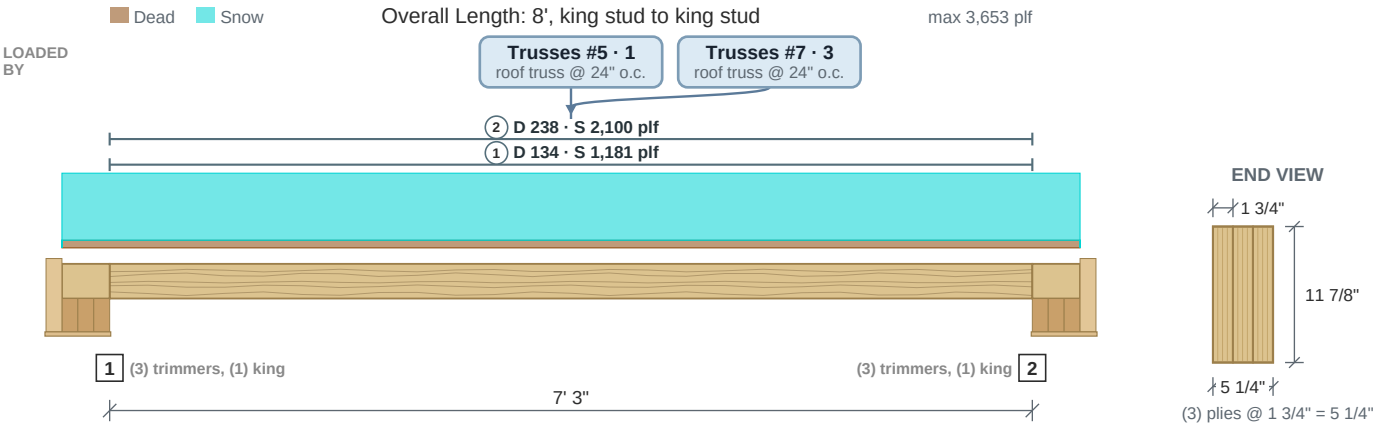

Drawing is conceptual. Locations are measured from the left end of the member; all dimensions are horizontal.

Design Results	Actual @ Location	Allowed	Result	LDF	Load Combination
Member Reaction (lbs)	13,308 @ 0	17,719 (4 1/2")	Passed (75% used)	--	
Shear (lbs)	9,675 @ 11 7/8"	13,624	Passed (71% used)	1.15	D+S
Moment (Ft-lbs)	26,190 @ 3' 7 1/2"	30,789	Passed (85% used)	1.15	D+S
Live Load Defl. (in)	0.207 @ 3' 8 5/8"	0.378	Passed (2L/437)	--	S
Total Load Defl. (in)	0.232 @ 3' 8 5/8"	0.504	Passed (2L/391)	--	D+S

- Deflection criteria (IRC Table R301.7): floor live alone L/360; roof live or snow alone L/240; dead plus live L/180.
- Bending adjustment factors: CD = 1.15, CV = 1.001, CL = 1.00 (D+S).
- Beam stability: each moment checked against the bracing of its compression edge (CL = 1.00 where braced).
- Member self weight of 18.2 plf is included.
- Calculations per NDS 2018 and Weyerhaeuser ICC-ES ESR-1387, ASD, every load combination with its own load duration factor.

	Bearing Length		Loads to Supports (lbs)			
Supports	**Provided**	**Required**	**Dead**	**Snow**	**Total**	**Load goes to**
1 @ 0	4 1/2"	3 3/8"	1,560	13,125	**14,685**	SpotFtg Hdr #6-1 (on (3) trimmers, (1) king stud)
2 @ 7' 3"	4 1/2"	3 3/8"	1,560	13,125	**14,685**	SpotFtg Hdr #6-2 (on (3) trimmers, (1) king stud)

Total = the governing ASD combination at that support; the category columns are service loads.

Lateral Bracing	Bracing Intervals	Comments
Top Edge (Lu)	continuous	braced by the sheathing
Bottom Edge (Lu)	7' 3" o/c	used for C_L only where the bottom edge is in compression

Vertical Loads	Location	Trib. Width	Dead (0.90)	Snow (1.15)	Comments
0 - Self Weight (PLF)	0 to 7' 3"	N/A	18.2	--	
1 - Uniform (PLF)	0 to 7' 3"	N/A	133.9	1,181	Linked from: Trusses #5, Support 1
2 - Uniform (PLF)	0 to 7' 3"	N/A	238	2,100	Linked from: Trusses #7, Support 3

Shear, Moment and Deflection

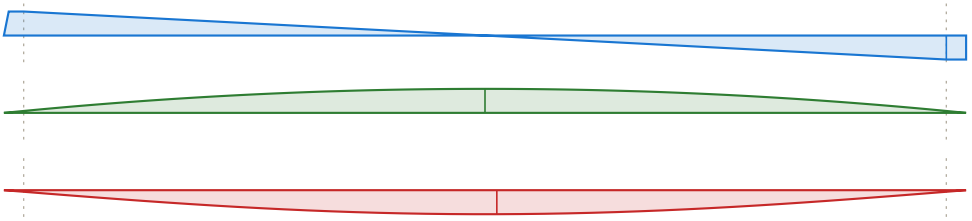

Shear (lbs)
D+S
max -13,308 @ 7' 3"

Moment (ft-lbs)
D+S
max 26,190 @ 3' 7 1/2"

Deflection (in)
D+S
0.184 in down @ 3' 8 5/8"
limit 0.504 in on 2L (cantilever)

Header #7

(4) 1 3/4" x 9 1/4" 2.0E Microlam LVL (Weyerhaeuser)

Level: Headers - 1st Level | Member type: Header (Roof Beam) | Length: 8' 2 1/2" | 2018 IRC | 2018 NDS | ASD

PASSED

Controls: Moment 81% used
Section adequacy 19.5% (capacity to spare)

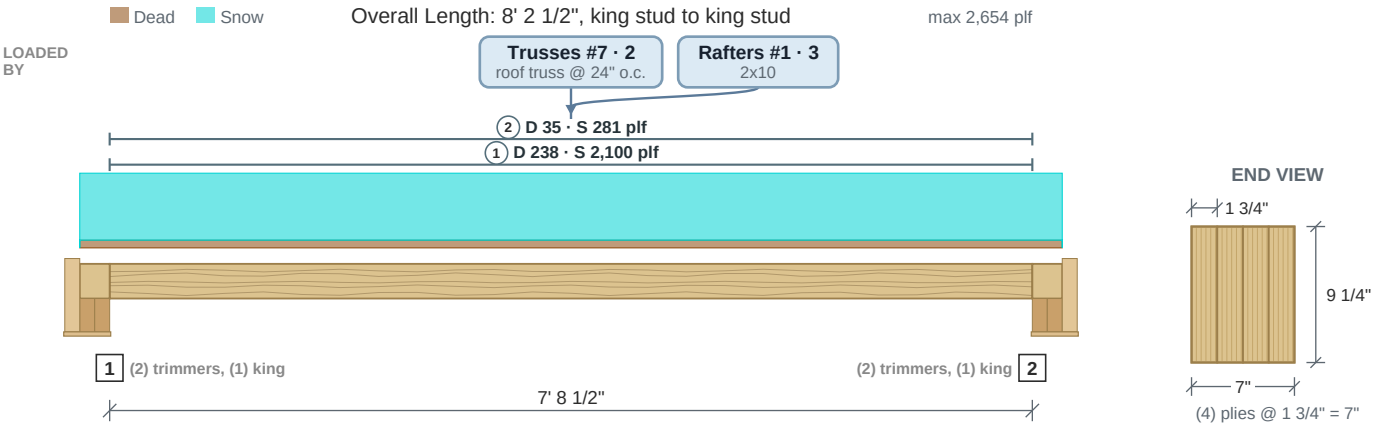

Drawing is conceptual. Locations are measured from the left end of the member; all dimensions are horizontal.

Design Results	Actual @ Location	Allowed	Result	LDF	Load Combination
Member Reaction (lbs)	10,303 @ 0	15,750 (3")	Passed (65% used)	--	
Shear (lbs)	8,243 @ 9 1/4"	14,150	Passed (58% used)	1.15	D+S
Moment (Ft-lbs)	20,754 @ 3' 10 1/4"	25,768	Passed (81% used)	1.15	D+S
Live Load Defl. (in)	0.257 @ 3' 10 1/4"	0.394	Passed (2L/368)	--	S
Total Load Defl. (in)	0.288 @ 3' 10 1/4"	0.526	Passed (2L/328)	--	D+S

- Deflection criteria (IRC Table R301.7): floor live alone L/360; roof live or snow alone L/240; dead plus live L/180.
- Bending adjustment factors: CD = 1.15, CV = 1.036, CL = 1.00 (D+S).
- Beam stability: each moment checked against the bracing of its compression edge (CL = 1.00 where braced).
- Member self weight of 18.9 plf is included.
- Calculations per NDS 2018 and Weyerhaeuser ICC-ES ESR-1387, ASD, every load combination with its own load duration factor.

	Bearing Length		Loads to Supports (lbs)			
Supports	**Provided**	**Required**	**Dead**	**Snow**	**Total**	**Load goes to**
1 @ 0	3"	1 15/16"	1,198	9,774	**10,972**	SpotFtg Hdr #7-1 (on (2) trimmers, (1) king stud)
2 @ 7' 8 1/2"	3"	1 15/16"	1,198	9,774	**10,972**	SpotFtg Hdr #7-2 (on (2) trimmers, (1) king stud)

Total = the governing ASD combination at that support; the category columns are service loads.

Lateral Bracing	Bracing Intervals	Comments
Top Edge (Lu)	continuous	braced by the sheathing
Bottom Edge (Lu)	7' 8 1/2" o/c	used for C_L only where the bottom edge is in compression

Vertical Loads	Location	Trib. Width	Dead (0.90)	Snow (1.15)	Comments
0 - Self Weight (PLF)	0 to 7' 8 1/2"	N/A	18.9	--	
1 - Uniform (PLF)	0 to 7' 8 1/2"	N/A	238	2,100	Linked from: Trusses #7, Support 2
2 - Uniform (PLF)	0 to 7' 8 1/2"	N/A	34.9	281.2	Linked from: Rafters #1, Support 3

Shear, Moment and Deflection

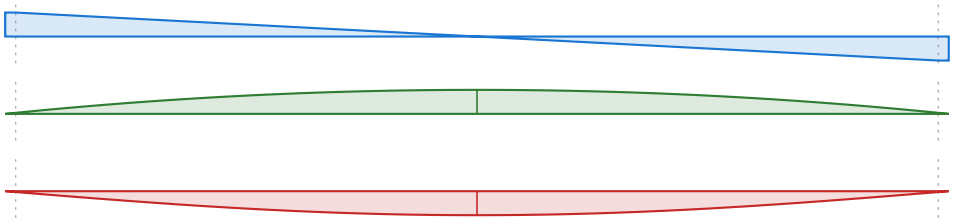

Shear (lbs)
D+S
max 10,303 @ -1 1/16"

Moment (ft-lbs)
D+S
max 20,754 @ 3' 10 1/4"

Deflection (in)
D+S
0.251 in down @ 3' 10 1/4"
limit 0.526 in on 2L (cantilever)

Header #8

PASSED

(1) 6 3/4" x 24" 24F-1.8E 24F-V4 DF/DF Glulam

Controls: Bearing 86% used

Level: Headers - 1st Level | Member type: Header (Roof Beam) | Length: 16' 6" | 2018 IRC | 2018 NDS | ASD

Section adequacy 14.5% (capacity to spare)

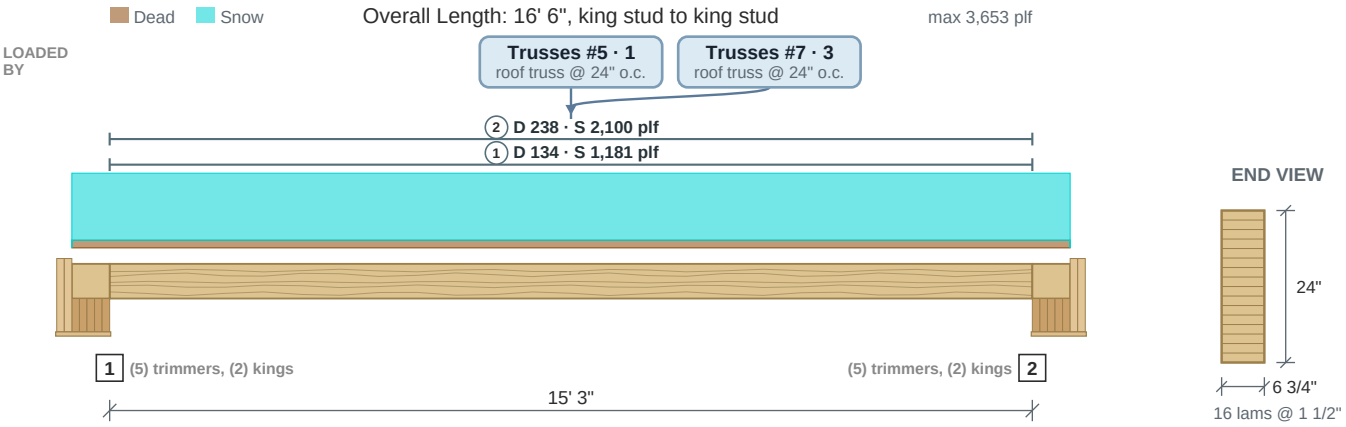

Drawing is conceptual. Locations are measured from the left end of the member; all dimensions are horizontal.

Design Results	Actual @ Location	Allowed	Result	LDF	Load Combination
Member Reaction (lbs)	28,136 @ 0	32,906 (7 1/2")	Passed (86% used)	--	
Shear (lbs)	20,756 @ 13' 3"	32,918	Passed (63% used)	1.15	D+S
Moment (Ft-lbs)	115,403 @ 7' 7 1/2"	139,682	Passed (83% used)	1.15	D+S
Live Load Defl. (in)	0.33 @ 7' 5 1/8"	0.791	Passed (2L/575)	--	S
Total Load Defl. (in)	0.371 @ 7' 5 1/8"	1.055	Passed (2L/511)	--	D+S

- Deflection criteria (IRC Table R301.7): floor live alone L/360; roof live or snow alone L/240; dead plus live L/180.
- Bending adjustment factors: CD = 1.15, CV = 0.937, CL = 1.00 (D+S).
- Beam stability: each moment checked against the bracing of its compression edge (CL = 1.00 where braced).
- Unbalanced glulam layup: install with the tension laminations at the bottom, proper side up as marked by the manufacturer.
- Member self weight of 36.9 plf is included.
- Calculations per NDS 2018, ASD, every load combination with its own load duration factor.

	Bearing Length		Loads to Supports (lbs)			
Supports	**Provided**	**Required**	**Dead**	**Snow**	**Total**	**Load goes to**
1 @ 0	7 1/2"	6 7/16"	3,372	27,070	**30,443**	SpotFtg Hdr #8-1 (on (5) trimmers, (2) king studs)
2 @ 15' 3"	7 1/2"	6 7/16"	3,372	27,070	**30,443**	SpotFtg Hdr #8-2 (on (5) trimmers, (2) king studs)

Total = the governing ASD combination at that support; the category columns are service loads.

Lateral Bracing	Bracing Intervals	Comments
Top Edge (Lu)	continuous	braced by the sheathing
Bottom Edge (Lu)	15' 3" o/c	used for C_L only where the bottom edge is in compression

Vertical Loads	Location	Trib. Width	Dead (0.90)	Snow (1.15)	Comments
0 - Self Weight (PLF)	0 to 15' 3"	N/A	36.9	--	
1 - Uniform (PLF)	0 to 15' 3"	N/A	133.9	1,181	Linked from: Trusses #5, Support 1
2 - Uniform (PLF)	0 to 15' 3"	N/A	238	2,100	Linked from: Trusses #7, Support 3

Shear, Moment and Deflection

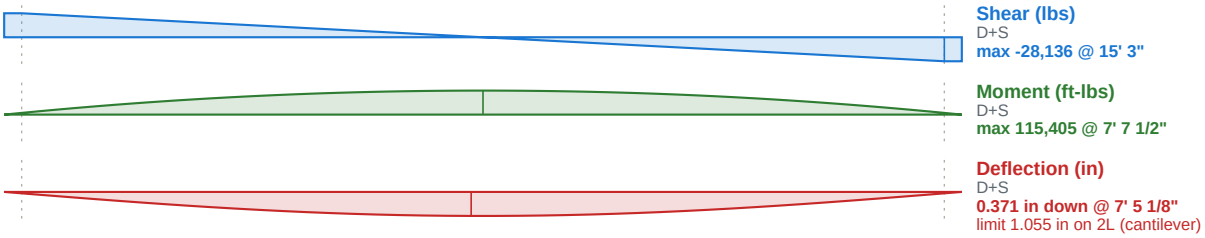

Header #9

PASSED

(1) 6 3/4" x 21" 24F-1.8E 24F-V4 DF/DF Glulam

Level: Headers - 1st Level | Member type: Header (Roof Beam) | Length: 18' 2" | 2018 IRC | 2018 NDS | ASD

Controls: Moment 96% used
Section adequacy 4% (capacity to spare)

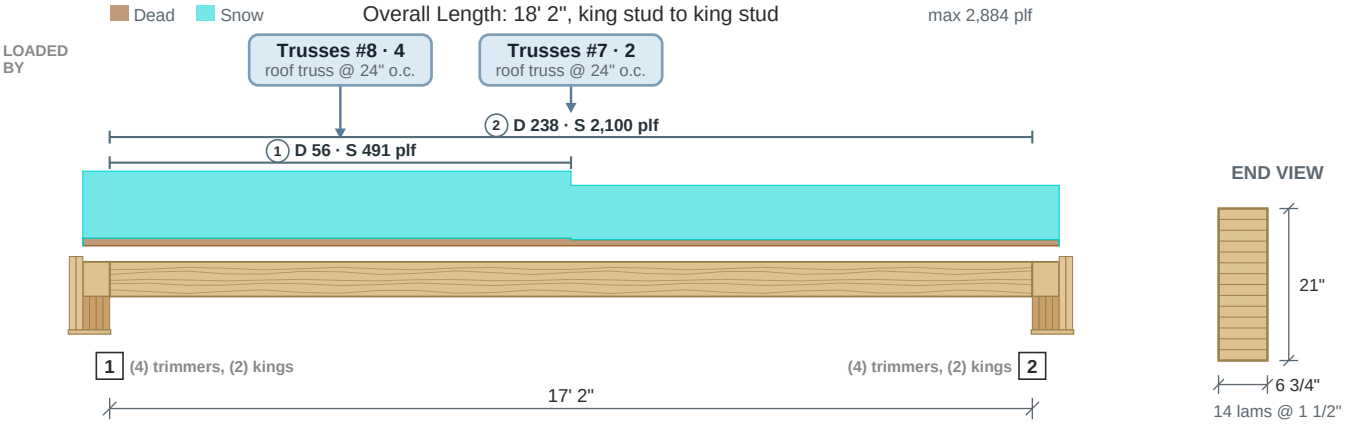

Drawing is conceptual. Locations are measured from the left end of the member; all dimensions are horizontal.

Design Results	Actual @ Location	Allowed	Result	LDF	Load Combination
Member Reaction (lbs)	23,800 @ 0	26,325 (6")	Passed (90% used)	--	
Shear (lbs)	18,696 @ 1' 9"	28,804	Passed (65% used)	1.15	D+S
Moment (Ft-lbs)	102,826 @ 8' 1 9/16"	107,105	Passed (96% used)	1.15	D+S
Live Load Defl. (in)	0.542 @ 8' 7"	0.881	Passed (2L/390)	--	S
Total Load Defl. (in)	0.609 @ 8' 7"	1.175	Passed (2L/347)	--	D+S

- Deflection criteria (IRC Table R301.7): floor live alone L/360; roof live or snow alone L/240; dead plus live L/180.
- Bending adjustment factors: CD = 1.15, CV = 0.939, CL = 1.00 (D+S).
- Beam stability: each moment checked against the bracing of its compression edge (CL = 1.00 where braced).
- Unbalanced glulam layup: install with the tension laminations at the bottom, proper side up as marked by the manufacturer.
- Member self weight of 32.3 plf is included.
- Calculations per NDS 2018, ASD, every load combination with its own load duration factor.

	Bearing Length		Loads to Supports (lbs)			
Supports	**Provided**	**Required**	**Dead**	**Snow**	**Total**	**Load goes to**
1 @ 0	6"	5 7/16"	2,840	22,424	**25,264**	SpotFtg Hdr #9-1 (on (4) trimmers, (2) king studs)
2 @ 17' 2"	6"	4 15/16"	3,052	20,184	**23,236**	SpotFtg Hdr #9-2 (on (4) trimmers, (2) king studs)

Total = the governing ASD combination at that support; the category columns are service loads.

Lateral Bracing	Bracing Intervals	Comments
Top Edge (Lu)	continuous	braced by the sheathing
Bottom Edge (Lu)	17' 2" o/c	used for C_L only where the bottom edge is in compression

Vertical Loads	Location	Trib. Width	Dead (0.90)	Snow (1.15)	Comments
0 - Self Weight (PLF)	0 to 17' 2"	N/A	32.3	--	
1 - Uniform (PLF)	0 to 8' 7"	N/A	55.6	490.7	Linked from: Trusses #8, Support 4
2 - Uniform (PLF)	0 to 17' 2"	N/A	238	2,100	Linked from: Trusses #7, Support 2

Shear, Moment and Deflection

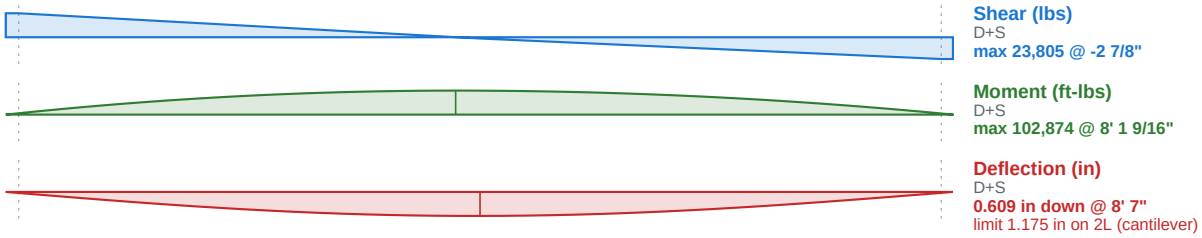

Header #10

PASSED

(1) 4x8 DF-L No. 2 (3 1/2" x 7 1/4")

Level: Headers - 1st Level | Member type: Header (Roof Beam) | Length: 8' 6" | 2018 IRC | 2018 NDS | ASD

Controls: Bearing 64% used
Section adequacy 35.7% (capacity to spare)

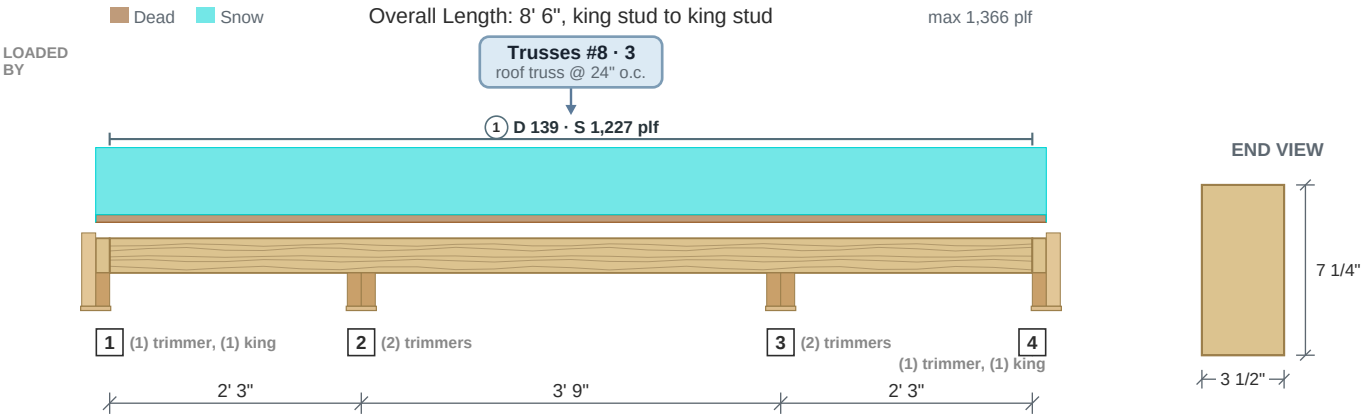

Drawing is conceptual. Locations are measured from the left end of the member; all dimensions are horizontal.

Design Results	Actual @ Location	Allowed	Result	LDF	Load Combination
Member Reaction (lbs)	4,746 @ 2' 3"	7,383 (3")	Passed (64% used)	--	
Shear (lbs)	1,572 @ 5' 3 1/4"	3,502	Passed (45% used)	1.15	D+S
Neg Moment (Ft-lbs)	-1,399 @ 6'	3,418	Passed (41% used)	1.15	D+S
Live Load Defl. (in)	0.009 @ 4' 2 11/16"	0.188	Passed (L/4,851)	--	S
Total Load Defl. (in)	0.01 @ 4' 2 11/16"	0.25	Passed (L/4,339)	--	D+S

- Deflection criteria (IRC Table R301.7): floor live alone L/360; roof live or snow alone L/240; dead plus live L/180.
- Bending adjustment factors: CD = 1.15, CF = 1.30, CL = 0.994 (D+S).
- Beam stability (NDS 3.3.3) governs bending: negative moment 1399 lbf-ft, 2.25-6.00 ft, CL 0.994 (unbraced 3.8 ft).
- Member self weight of 5.8 plf is included.
- Calculations per NDS 2018, ASD, every load combination with its own load duration factor.

	Bearing Length		Loads to Supports (lbs)			
Supports	**Provided**	**Required**	**Dead**	**Snow**	**Total**	**Load goes to**
1 @ 0	1 1/2"	7/16"	114	970	**1,084**	Bearing wall (marked, trimmers) -- on (1) trimmer, (1) king stud
2 @ 2' 3"	3"	1 13/16"	501	4,245	**4,746**	SpotFtg Hdr #10-2 (on (2) trimmers)
3 @ 6'	3"	1 13/16"	501	4,245	**4,746**	SpotFtg Hdr #10-3 (on (2) trimmers)
4 @ 8' 3"	1 1/2"	7/16"	114	970	**1,084**	Bearing wall (marked, trimmers) -- on (1) trimmer, (1) king stud

Total = the governing ASD combination at that support; the category columns are service loads.

Lateral Bracing	Bracing Intervals	Comments
Top Edge (Lu)	continuous	braced by the sheathing
Bottom Edge (Lu)	3' 9" o/c	governs C_L here: the bottom edge is in compression

Vertical Loads	Location	Trib. Width	Dead (0.90)	Snow (1.15)	Comments
0 - Self Weight (PLF)	0 to 8' 3"	N/A	5.8	--	
1 - Uniform (PLF)	0 to 8' 3"	N/A	139.1	1,227	Linked from: Trusses #8, Support 3

Shear, Moment and Deflection

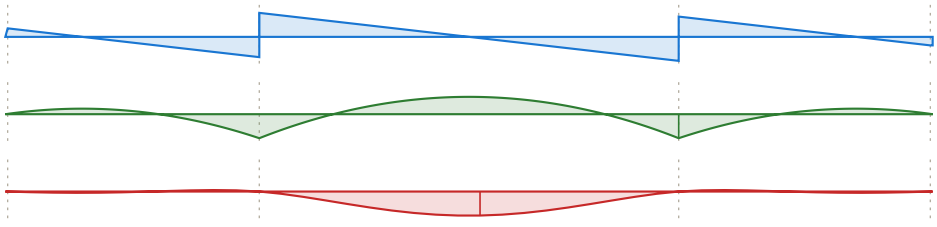

Shear (lbs)
D+S
max 2,572 @ 2' 3"

Moment (ft-lbs)
D+S
max -1,399 @ 6'

Deflection (in)
D+S
0.01 in down @ 4' 2 11/16"
limit 0.25 in on the span

Header #11

(1) 4x8 DF-L No. 2 (3 1/2" x 7 1/4")

Level: Headers - 1st Level | Member type: Header (Roof Beam) | Length: 9' | 2018 IRC | 2018 NDS | ASD

PASSED

Controls: Moment 87% used
Section adequacy 13% (capacity to spare)

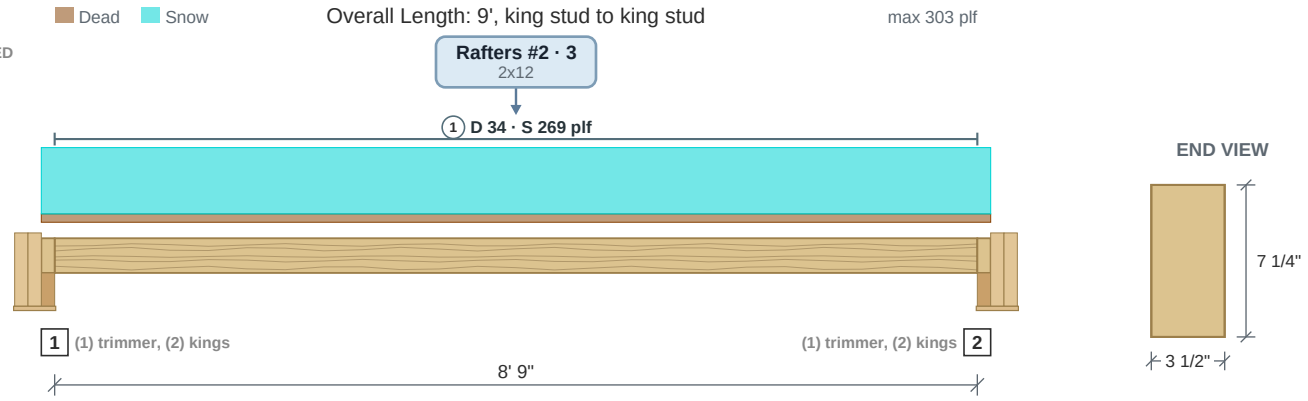

Drawing is conceptual. Locations are measured from the left end of the member; all dimensions are horizontal.

Design Results	Actual @ Location	Allowed	Result	LDF	Load Combination
Member Reaction (lbs)	1,351 @ 0	3,281 (1 1/2")	Passed (41% used)	--	
Shear (lbs)	1,164 @ 7 1/4"	3,502	Passed (33% used)	1.15	D+S
Moment (Ft-lbs)	2,991 @ 4' 4 1/2"	3,438	Passed (87% used)	1.15	D+S
Live Load Defl. (in)	0.204 @ 4' 4 1/2"	0.44	Passed (2L/517)	--	S
Total Load Defl. (in)	0.235 @ 4' 4 1/2"	0.587	Passed (2L/450)	--	D+S

- Deflection criteria (IRC Table R301.7): floor live alone L/360; roof live or snow alone L/240; dead plus live L/180.
- Bending adjustment factors: CD = 1.15, CF = 1.30, CL = 1.00 (D+S).
- Beam stability: each moment checked against the bracing of its compression edge (CL = 1.00 where braced).
- Member self weight of 5.8 plf is included.
- Calculations per NDS 2018, ASD, every load combination with its own load duration factor.

	Bearing Length		Loads to Supports (lbs)			
Supports	**Provided**	**Required**	**Dead**	**Snow**	**Total**	**Load goes to**
1 @ 0	1 1/2"	5/8"	179	1,211	**1,390**	Bearing wall (marked, trimmers) -- on (1) trimmer, (2) king studs
2 @ 8' 9"	1 1/2"	5/8"	179	1,211	**1,390**	Bearing wall (marked, trimmers) -- on (1) trimmer, (2) king studs

Total = the governing ASD combination at that support; the category columns are service loads.

Lateral Bracing	Bracing Intervals	Comments
Top Edge (Lu)	continuous	braced by the sheathing
Bottom Edge (Lu)	8' 9" o/c	used for C_L only where the bottom edge is in compression

Vertical Loads	Location	Trib. Width	Dead (0.90)	Snow (1.15)	Comments
0 - Self Weight (PLF)	0 to 8' 9"	N/A	5.8	--	
1 - Uniform (PLF)	0 to 8' 9"	N/A	33.9	269.1	Linked from: Rafters #2, Support 3

Shear, Moment and Deflection

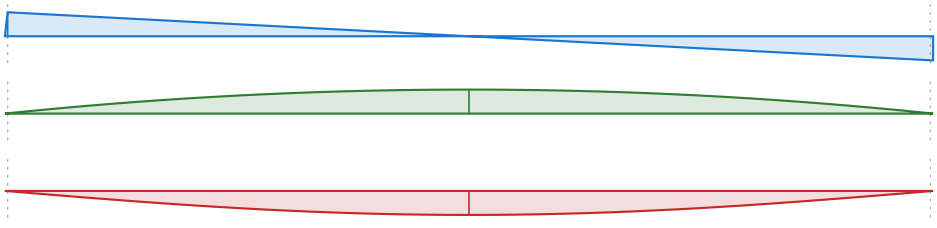

Shear (lbs)
D+S
max 1,351 @ 0

Moment (ft-lbs)
D+S
max 2,991 @ 4' 4 1/2"

Deflection (in)
D+S
0.235 in down @ 4' 4 1/2"
limit 0.587 in on 2L (cantilever)

Header #12

PASSED

(1) 4x10 DF-L No. 2 (3 1/2" x 9 1/4")

Controls: Moment 89% used

Level: Headers - 1st Level | Member type: Header (Roof Beam) | Length: 7' 6" | 2018 IRC | 2018 NDS | ASD

Section adequacy 11.1% (capacity to spare)

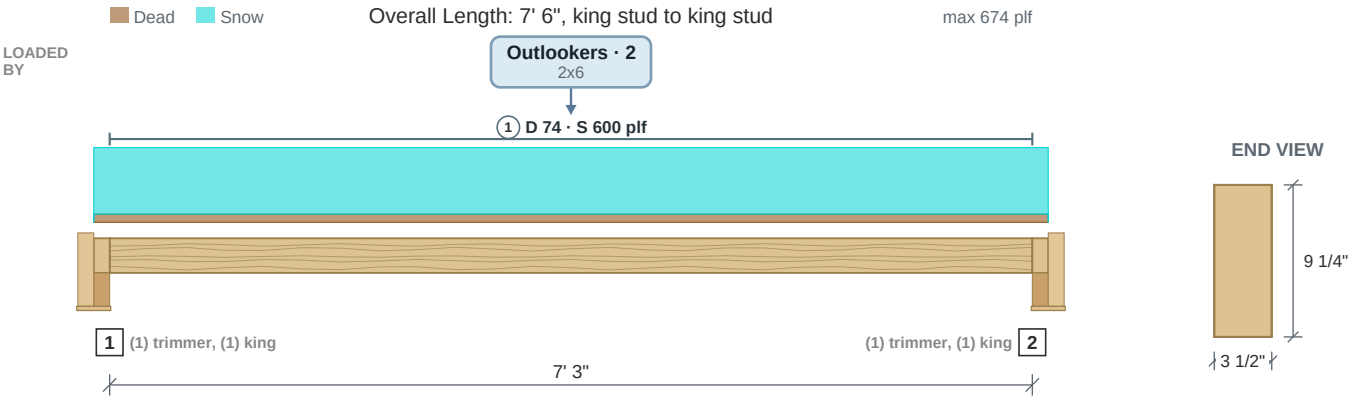

Drawing is conceptual. Locations are measured from the left end of the member; all dimensions are horizontal.

Design Results	Actual @ Location	Allowed	Result	LDF	Load Combination
Member Reaction (lbs)	2,469 @ 0	3,281 (1 1/2")	Passed (75% used)	--	
Shear (lbs)	1,944 @ 9 1/4"	4,468	Passed (44% used)	1.15	D+S
Moment (Ft-lbs)	4,594 @ 3' 7 1/2"	5,166	Passed (89% used)	1.15	D+S
Live Load Defl. (in)	0.106 @ 3' 7 1/2"	0.367	Passed (2L/828)	--	S
Total Load Defl. (in)	0.121 @ 3' 7 1/2"	0.49	Passed (2L/729)	--	D+S

- Deflection criteria (IRC Table R301.7): floor live alone L/360; roof live or snow alone L/240; dead plus live L/180.
- Bending adjustment factors: CD = 1.15, CF = 1.20, CL = 1.00 (D+S).
- Beam stability: each moment checked against the bracing of its compression edge (CL = 1.00 where braced).
- Member self weight of 7.4 plf is included.
- Calculations per NDS 2018, ASD, every load combination with its own load duration factor.

	Bearing Length		Loads to Supports (lbs)			
Supports	**Provided**	**Required**	**Dead**	**Snow**	**Total**	**Load goes to**
1 @ 0	1 1/2"	1 1/8"	304	2,250	**2,554**	Bearing wall (marked, trimmers) -- on (1) trimmer, (1) king stud
2 @ 7' 3"	1 1/2"	1 1/8"	304	2,250	**2,554**	Bearing wall (marked, trimmers) -- on (1) trimmer, (1) king stud

Total = the governing ASD combination at that support; the category columns are service loads.

Lateral Bracing	Bracing Intervals	Comments
Top Edge (Lu)	continuous	braced by the sheathing
Bottom Edge (Lu)	7' 3" o/c	used for C_L only where the bottom edge is in compression

Vertical Loads	Location	Trib. Width	Dead (0.90)	Snow (1.15)	Comments
0 - Self Weight (PLF)	0 to 7' 3"	N/A	7.4	--	
1 - Uniform (PLF)	0 to 7' 3"	N/A	73.6	600	Linked from: Outlookers, Support 2

Shear, Moment and Deflection

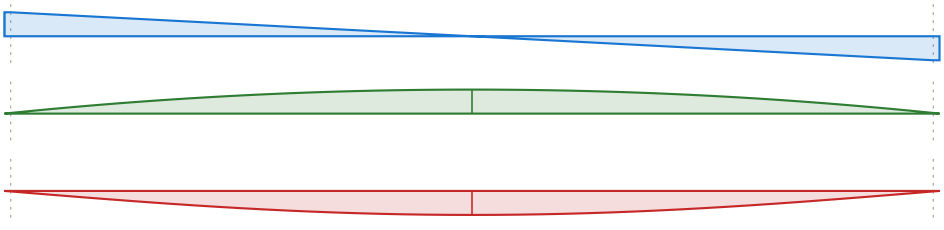

Shear (lbs)
D+S
max 2,469 @ -9/16"

Moment (ft-lbs)
D+S
max 4,595 @ 3' 7 1/2"

Deflection (in)
D+S
0.121 in down @ 3' 7 1/2"
limit 0.49 in on 2L (cantilever)

Header #13

(3) 1 3/4" x 11 1/4" 2.0E Microlam LVL (Weyerhaeuser)

Level: Headers - 1st Level | Member type: Header (Roof Beam) | Length: 9' 11 1/2" | 2018 IRC | 2018 NDS | ASD

PASSED

Controls: Moment 75% used
Section adequacy 24.6% (capacity to spare)

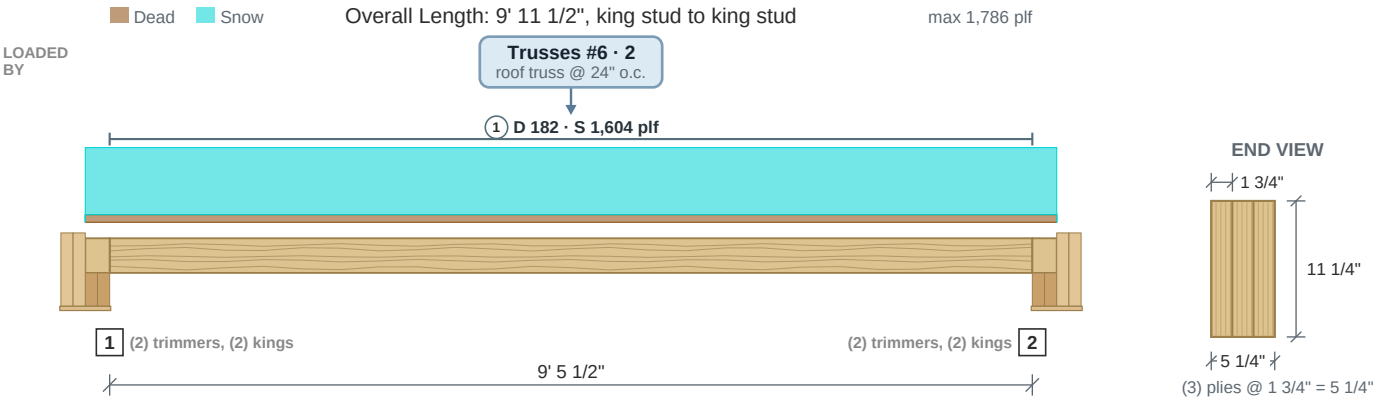

Drawing is conceptual. Locations are measured from the left end of the member; all dimensions are horizontal.

Design Results	Actual @ Location	Allowed	Result	LDF	Load Combination
Member Reaction (lbs)	8,529 @ 0	11,812 (3")	Passed (72% used)	--	
Shear (lbs)	6,838 @ 11 1/4"	12,907	Passed (53% used)	1.15	D+S
Moment (Ft-lbs)	20,979 @ 4' 8 3/4"	27,837	Passed (75% used)	1.15	D+S
Live Load Defl. (in)	0.287 @ 4' 8 3/4"	0.482	Passed (2L/403)	--	S
Total Load Defl. (in)	0.323 @ 4' 8 3/4"	0.643	Passed (2L/358)	--	D+S

- Deflection criteria (IRC Table R301.7): floor live alone L/360; roof live or snow alone L/240; dead plus live L/180.
- Bending adjustment factors: CD = 1.15, CV = 1.009, CL = 1.00 (D+S).
- Beam stability: each moment checked against the bracing of its compression edge (CL = 1.00 where braced).
- Member self weight of 17.2 plf is included.
- Calculations per NDS 2018 and Weyerhaeuser ICC-ES ESR-1387, ASD, every load combination with its own load duration factor.

	Bearing Length		Loads to Supports (lbs)			
Supports	**Provided**	**Required**	**Dead**	**Snow**	**Total**	**Load goes to**
1 @ 0	3"	2 3/16"	991	7,989	**8,980**	SpotFtg Hdr #13-1 (on (2) trimmers, (2) king studs)
2 @ 9' 5 1/2"	3"	2 3/16"	991	7,989	**8,980**	SpotFtg Hdr #13-2 (on (2) trimmers, (2) king studs)

Total = the governing ASD combination at that support; the category columns are service loads.

Lateral Bracing	Bracing Intervals	Comments
Top Edge (Lu)	continuous	braced by the sheathing
Bottom Edge (Lu)	9' 5 1/2" o/c	used for C_L only where the bottom edge is in compression

Vertical Loads	Location	Trib. Width	Dead (0.90)	Snow (1.15)	Comments
0 - Self Weight (PLF)	0 to 9' 5 1/2"	N/A	17.2	--	
1 - Uniform (PLF)	0 to 9' 5 1/2"	N/A	181.8	1,604	Linked from: Trusses #6, Support 2

Shear, Moment and Deflection

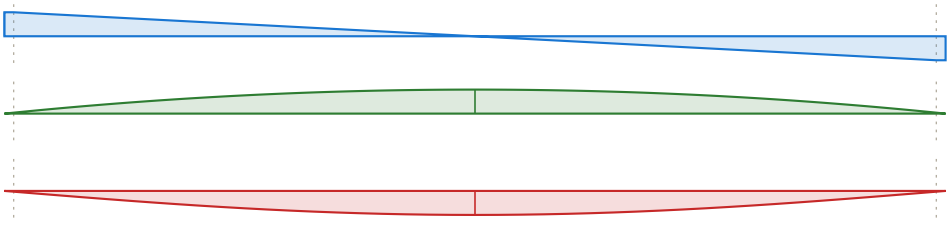

Shear (lbs)
D+S
max 8,529 @ -1 1/8"

Moment (ft-lbs)
D+S
max 20,979 @ 4' 8 3/4"

Deflection (in)
D+S
0.282 in down @ 4' 8 3/4"
limit 0.643 in on 2L (cantilever)

Header #14

PASSED

(1) 4x8 DF-L No. 2 (3 1/2" x 7 1/4")

Level: Headers - 1st Level | Member type: Header (Roof Beam) | Length: 4' | 2018 IRC | 2018 NDS | ASD

Controls: Bearing 39% used
Section adequacy 61.2% (capacity to spare)

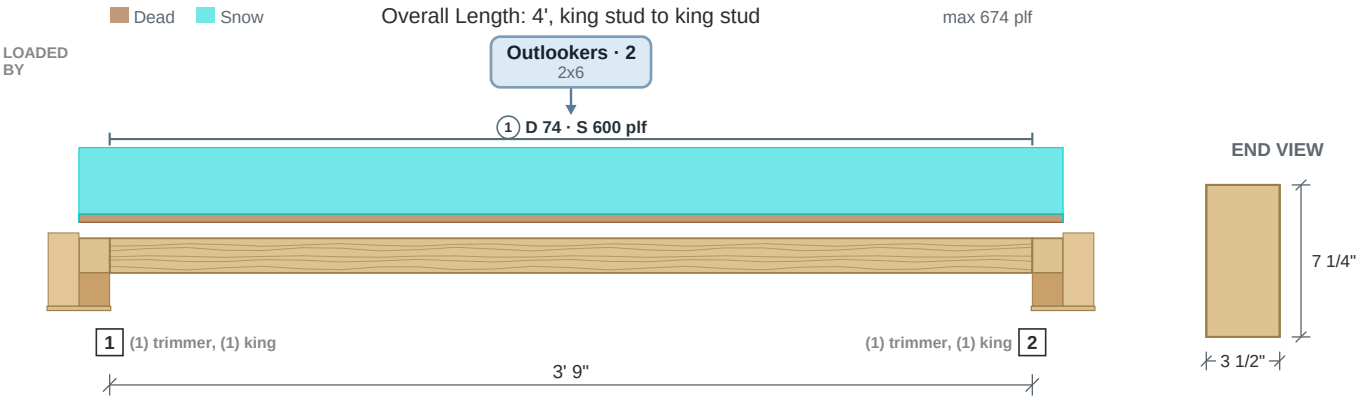

Drawing is conceptual. Locations are measured from the left end of the member; all dimensions are horizontal.

Design Results	Actual @ Location	Allowed	Result	LDF	Load Combination
Member Reaction (lbs)	1,274 @ 0	3,281 (1 1/2")	Passed (39% used)	--	
Shear (lbs)	863 @ 7 1/4"	3,502	Passed (25% used)	1.15	D+S
Moment (Ft-lbs)	1,227 @ 1' 10 1/2"	3,438	Passed (36% used)	1.15	D+S
Live Load Defl. (in)	0.016 @ 1' 10 1/2"	0.19	Passed (2L/2,877)	--	S
Total Load Defl. (in)	0.018 @ 1' 10 1/2"	0.253	Passed (2L/2,541)	--	D+S

- Deflection criteria (IRC Table R301.7): floor live alone L/360; roof live or snow alone L/240; dead plus live L/180.
- Bending adjustment factors: CD = 1.15, CF = 1.30, CL = 1.00 (D+S).
- Beam stability: each moment checked against the bracing of its compression edge (CL = 1.00 where braced).
- Member self weight of 5.8 plf is included.
- Calculations per NDS 2018, ASD, every load combination with its own load duration factor.

	Bearing Length		Loads to Supports (lbs)			
Supports	**Provided**	**Required**	**Dead**	**Snow**	**Total**	**Load goes to**
1 @ 0	1 1/2"	9/16"	159	1,200	**1,359**	Bearing wall (marked, trimmers) -- on (1) trimmer, (1) king stud
2 @ 3' 9"	1 1/2"	9/16"	159	1,200	**1,359**	Bearing wall (marked, trimmers) -- on (1) trimmer, (1) king stud

Total = the governing ASD combination at that support; the category columns are service loads.

Lateral Bracing	Bracing Intervals	Comments
Top Edge (Lu)	continuous	braced by the sheathing
Bottom Edge (Lu)	3' 9" o/c	used for C_L only where the bottom edge is in compression

Vertical Loads	Location	Trib. Width	Dead (0.90)	Snow (1.15)	Comments
0 - Self Weight (PLF)	0 to 3' 9"	N/A	5.8	--	
1 - Uniform (PLF)	0 to 3' 9"	N/A	73.6	600	Linked from: Outlookers, Support 2

Shear, Moment and Deflection

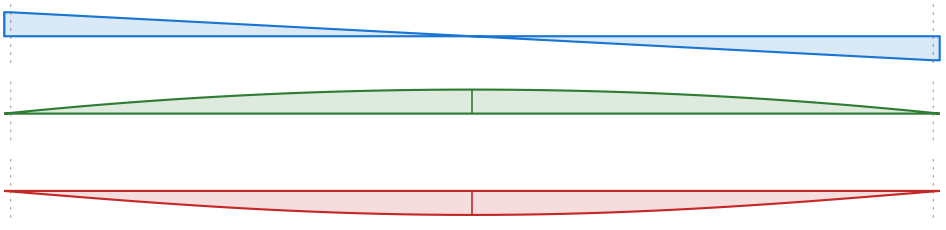

Shear (lbs)
D+S
max 1,274 @ -5/16"

Moment (ft-lbs)
D+S
max 1,227 @ 1' 10 1/2"

Deflection (in)
D+S
0.018 in down @ 1' 10 1/2"
limit 0.253 in on 2L (cantilever)

Header #15

(1) 4x8 DF-L No. 2 (3 1/2" x 7 1/4")

Level: Headers - 1st Level | Member type: Header (Roof Beam) | Length: 4' | 2018 IRC | 2018 NDS | ASD

PASSED

Controls: Bearing 39% used
Section adequacy 61.2% (capacity to spare)

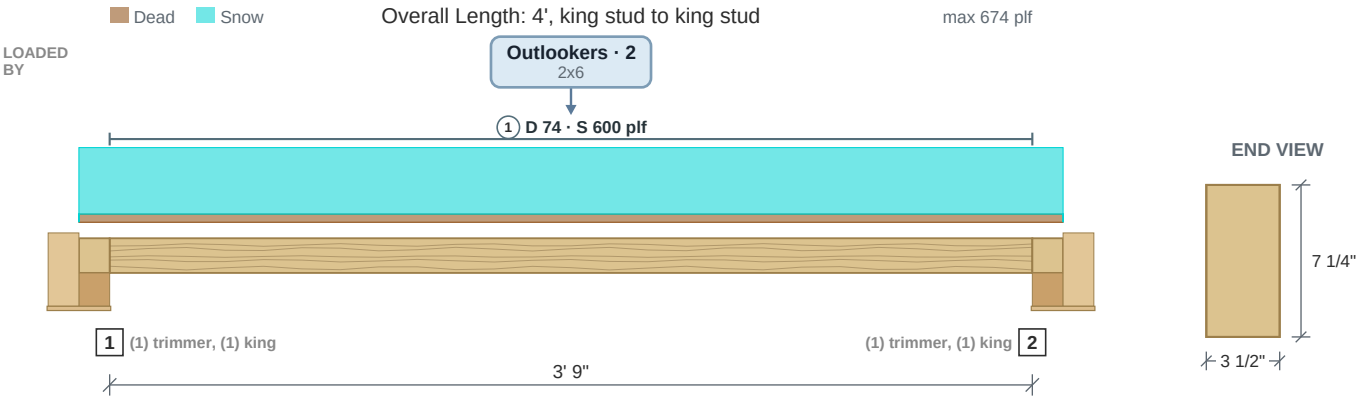

Drawing is conceptual. Locations are measured from the left end of the member; all dimensions are horizontal.

Design Results	Actual @ Location	Allowed	Result	LDF	Load Combination
Member Reaction (lbs)	1,274 @ 0	3,281 (1 1/2")	Passed (39% used)	--	
Shear (lbs)	863 @ 7 1/4"	3,502	Passed (25% used)	1.15	D+S
Moment (Ft-lbs)	1,227 @ 1' 10 1/2"	3,438	Passed (36% used)	1.15	D+S
Live Load Defl. (in)	0.016 @ 1' 10 1/2"	0.19	Passed (2L/2,877)	--	S
Total Load Defl. (in)	0.018 @ 1' 10 1/2"	0.253	Passed (2L/2,541)	--	D+S

- Deflection criteria (IRC Table R301.7): floor live alone L/360; roof live or snow alone L/240; dead plus live L/180.
- Bending adjustment factors: CD = 1.15, CF = 1.30, CL = 1.00 (D+S).
- Beam stability: each moment checked against the bracing of its compression edge (CL = 1.00 where braced).
- Member self weight of 5.8 plf is included.
- Calculations per NDS 2018, ASD, every load combination with its own load duration factor.

	Bearing Length		Loads to Supports (lbs)			
Supports	Provided	Required	Dead	Snow	Total	Load goes to
1 @ 0	1 1/2"	9/16"	159	1,200	**1,359**	Bearing wall (marked, trimmers) -- on (1) trimmer, (1) king stud
2 @ 3' 9"	1 1/2"	9/16"	159	1,200	**1,359**	Bearing wall (marked, trimmers) -- on (1) trimmer, (1) king stud

Total = the governing ASD combination at that support; the category columns are service loads.

Lateral Bracing	Bracing Intervals	Comments
Top Edge (Lu)	continuous	braced by the sheathing
Bottom Edge (Lu)	3' 9" o/c	used for C_L only where the bottom edge is in compression

Vertical Loads	Location	Trib. Width	Dead (0.90)	Snow (1.15)	Comments
0 - Self Weight (PLF)	0 to 3' 9"	N/A	5.8	--	
1 - Uniform (PLF)	0 to 3' 9"	N/A	73.6	600	Linked from: Outlookers, Support 2

Shear, Moment and Deflection

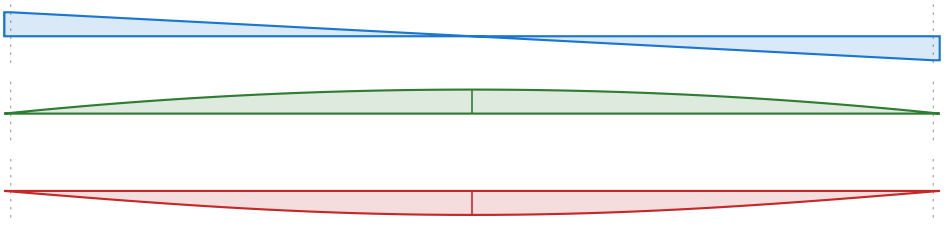

Shear (lbs)
D+S
max 1,274 @ -5/16"

Moment (ft-lbs)
D+S
max 1,227 @ 1' 10 1/2"

Deflection (in)
D+S
0.018 in down @ 1' 10 1/2"
limit 0.253 in on 2L (cantilever)

Header #16

(1) 4x10 DF-L No. 2 (3 1/2" x 9 1/4")

Level: Headers - 1st Level | Member type: Header (Roof Beam) | Length: 6' 6 1/2" | 2018 IRC | 2018 NDS | ASD

PASSED

Controls: Moment 67% used
Section adequacy 33% (capacity to spare)

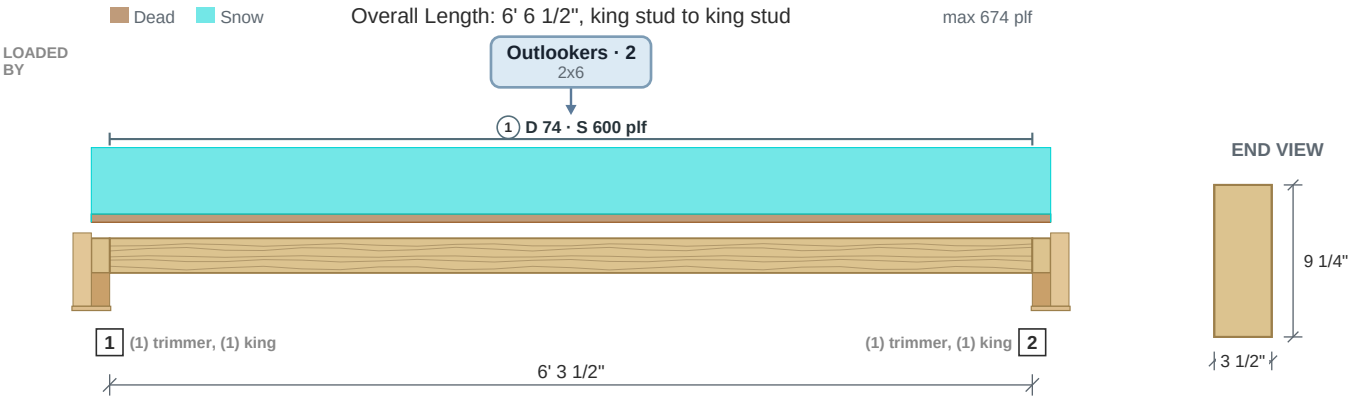

Drawing is conceptual. Locations are measured from the left end of the member; all dimensions are horizontal.

Design Results	Actual @ Location	Allowed	Result	LDF	Load Combination
Member Reaction (lbs)	2,142 @ 0	3,281 (1 1/2")	Passed (65% used)	--	
Shear (lbs)	1,618 @ 5' 6 1/4"	4,468	Passed (36% used)	1.15	D+S
Moment (Ft-lbs)	3,461 @ 3' 1 3/4"	5,166	Passed (67% used)	1.15	D+S
Live Load Defl. (in)	0.06 @ 3' 1 3/4"	0.319	Passed (2L/1,266)	--	S
Total Load Defl. (in)	0.069 @ 3' 1 3/4"	0.425	Passed (2L/1,116)	--	D+S

- Deflection criteria (IRC Table R301.7): floor live alone L/360; roof live or snow alone L/240; dead plus live L/180.
- Bending adjustment factors: CD = 1.15, CF = 1.20, CL = 1.00 (D+S).
- Beam stability: each moment checked against the bracing of its compression edge (CL = 1.00 where braced).
- Member self weight of 7.4 plf is included.
- Calculations per NDS 2018, ASD, every load combination with its own load duration factor.

	Bearing Length		Loads to Supports (lbs)			
Supports	Provided	Required	Dead	Snow	Total	Load goes to
1 @ 0	1 1/2"	1"	265	1,963	**2,228**	Bearing wall (marked, trimmers) -- on (1) trimmer, (1) king stud
2 @ 6' 3 1/2"	1 1/2"	1"	265	1,963	**2,228**	Bearing wall (marked, trimmers) -- on (1) trimmer, (1) king stud

Total = the governing ASD combination at that support; the category columns are service loads.

Lateral Bracing	Bracing Intervals	Comments
Top Edge (Lu)	continuous	braced by the sheathing
Bottom Edge (Lu)	6' 3 1/2" o/c	used for C_L only where the bottom edge is in compression

Vertical Loads	Location	Trib. Width	Dead (0.90)	Snow (1.15)	Comments
0 - Self Weight (PLF)	0 to 6' 3 1/2"	N/A	7.4	--	
1 - Uniform (PLF)	0 to 6' 3 1/2"	N/A	73.6	600	Linked from: Outlookers, Support 2

Shear, Moment and Deflection

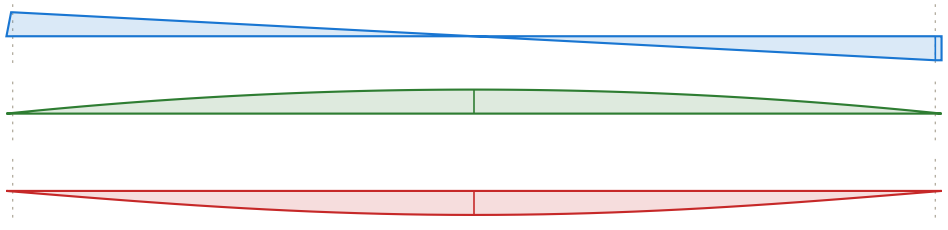

Shear (lbs)
D+S
max -2,142 @ 6' 3 1/2"

Moment (ft-lbs)
D+S
max 3,461 @ 3' 1 3/4"

Deflection (in)
D+S
0.069 in down @ 3' 1 3/4"
limit 0.425 in on 2L (cantilever)

Header #17

PASSED

(1) 4x8 DF-L No. 2 (3 1/2" x 7 1/4")

Level: Headers - 1st Level | Member type: Header (Roof Beam) | Length: 3' 9" | 2018 IRC | 2018 NDS | ASD

Controls: Moment 90% used
Section adequacy 10.3% (capacity to spare)

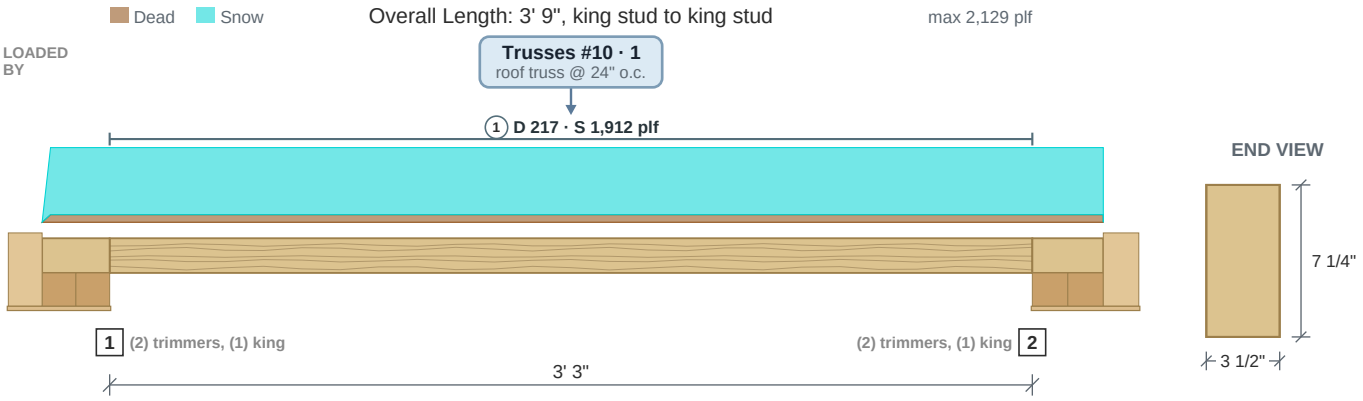

Drawing is conceptual. Locations are measured from the left end of the member; all dimensions are horizontal.

Design Results	Actual @ Location	Allowed	Result	LDF	Load Combination
Member Reaction (lbs)	3,469 @ 0	6,562 (3")	Passed (53% used)	--	
Shear (lbs)	2,180 @ 2' 7 3/4"	3,502	Passed (62% used)	1.15	D+S
Moment (Ft-lbs)	3,084 @ 1' 7 1/2"	3,438	Passed (90% used)	1.15	D+S
Live Load Defl. (in)	0.032 @ 1' 7"	0.17	Passed (2L/1,263)	--	S
Total Load Defl. (in)	0.036 @ 1' 7"	0.227	Passed (2L/1,131)	--	D+S

- Deflection criteria (IRC Table R301.7): floor live alone L/360; roof live or snow alone L/240; dead plus live L/180.
- Bending adjustment factors: CD = 1.15, CF = 1.30, CL = 1.00 (D+S).
- Beam stability: each moment checked against the bracing of its compression edge (CL = 1.00 where braced).
- Member self weight of 5.8 plf is included.
- Calculations per NDS 2018, ASD, every load combination with its own load duration factor.

	Bearing Length		Loads to Supports (lbs)			
Supports	**Provided**	**Required**	**Dead**	**Snow**	**Total**	**Load goes to**
1 @ 0	3"	1 9/16"	417	3,586	**4,003**	SpotFtg Bm #13-2 (on (2) trimmers, (1) king stud)
2 @ 3' 3"	3"	1 9/16"	417	3,586	**4,003**	SpotFtg Hdr #17-2 (on (2) trimmers, (1) king stud)

Total = the governing ASD combination at that support; the category columns are service loads.

Lateral Bracing	Bracing Intervals	Comments
Top Edge (Lu)	continuous	braced by the sheathing
Bottom Edge (Lu)	3' 3" o/c	used for C_L only where the bottom edge is in compression

Vertical Loads	Location	Trib. Width	Dead (0.90)	Snow (1.15)	Comments
0 - Self Weight (PLF)	0 to 3' 3"	N/A	5.8	--	
1 - Uniform (PLF)	0 to 3' 3"	N/A	216.8	1,912	Linked from: Trusses #10, Support 1

Shear, Moment and Deflection

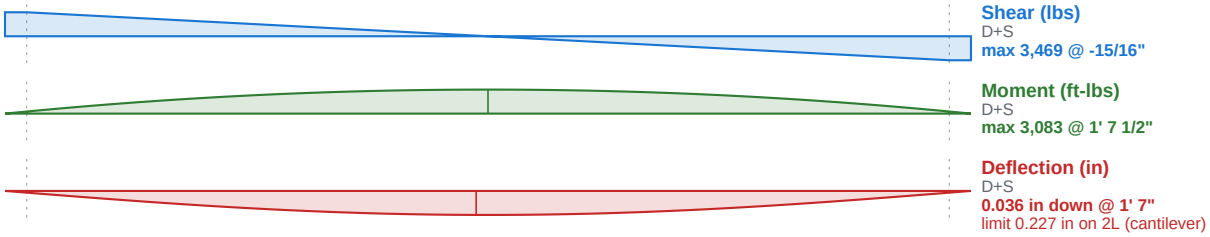

Header #18

(2) 1 3/4" x 7 1/4" 2.0E Microlam LVL (Weyerhaeuser)

Level: Headers - 1st Level | Member type: Header (Roof Beam) | Length: 5' 6" | 2018 IRC | 2018 NDS | ASD

PASSED

Controls: Moment 88% used
Section adequacy 12.3% (capacity to spare)

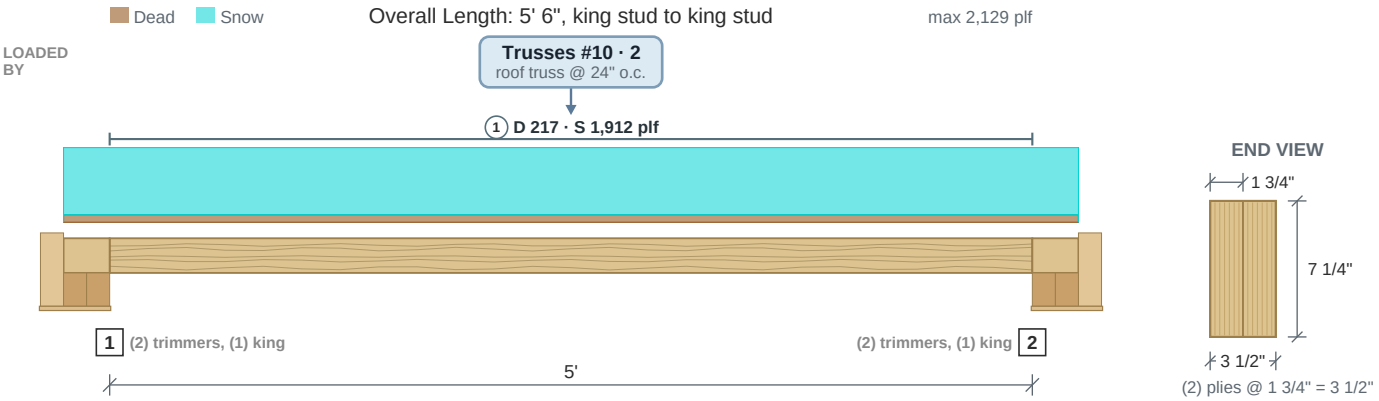

Drawing is conceptual. Locations are measured from the left end of the member; all dimensions are horizontal.

Design Results	Actual @ Location	Allowed	Result	LDF	Load Combination
Member Reaction (lbs)	5,342 @ 0	7,875 (3")	Passed (68% used)	--	
Shear (lbs)	4,051 @ 7 1/4"	5,545	Passed (73% used)	1.15	D+S
Moment (Ft-lbs)	7,175 @ 2' 6"	8,182	Passed (88% used)	1.15	D+S
Live Load Defl. (in)	0.169 @ 2' 6 3/4"	0.259	Passed (2L/368)	--	S
Total Load Defl. (in)	0.189 @ 2' 6 3/4"	0.346	Passed (2L/330)	--	D+S

- Deflection criteria (IRC Table R301.7): floor live alone L/360; roof live or snow alone L/240; dead plus live L/180.
- Bending adjustment factors: CD = 1.15, CV = 1.071, CL = 1.00 (D+S).
- Beam stability: each moment checked against the bracing of its compression edge (CL = 1.00 where braced).
- Member self weight of 7.4 plf is included.
- Calculations per NDS 2018 and Weyerhaeuser ICC-ES ESR-1387, ASD, every load combination with its own load duration factor.

	Bearing Length		Loads to Supports (lbs)			
Supports	**Provided**	**Required**	**Dead**	**Snow**	**Total**	**Load goes to**
1 @ 0	3"	2"	616	5,259	**5,876**	SpotFtg Hdr #18-1 (on (2) trimmers, (1) king stud)
2 @ 5'	3"	2"	616	5,259	**5,876**	SpotFtg Hdr #18-2 (on (2) trimmers, (1) king stud)

Total = the governing ASD combination at that support; the category columns are service loads.

Lateral Bracing	Bracing Intervals	Comments
Top Edge (Lu)	continuous	braced by the sheathing
Bottom Edge (Lu)	5' o/c	used for C_L only where the bottom edge is in compression

Vertical Loads	Location	Trib. Width	Dead (0.90)	Snow (1.15)	Comments
0 - Self Weight (PLF)	0 to 5'	N/A	7.4	--	
1 - Uniform (PLF)	0 to 5'	N/A	216.8	1,912	Linked from: Trusses #10, Support 2

Shear, Moment and Deflection

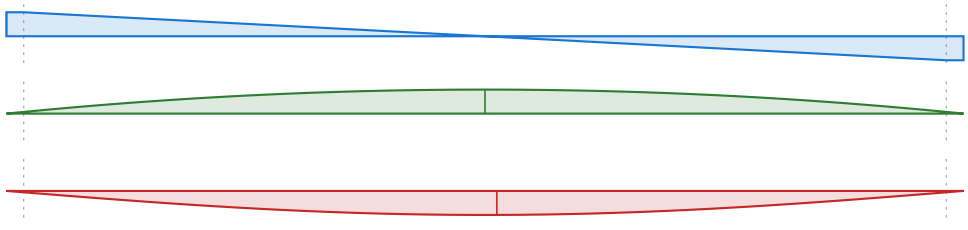

Shear (lbs)
D+S
max 5,342 @ -1 1/8"

Moment (ft-lbs)
D+S
max 7,175 @ 2' 6"

Deflection (in)
D+S
0.156 in down @ 2' 6 3/4"
limit 0.346 in on 2L (cantilever)

Header #19

PASSED

(1) 4x8 DF-L No. 2 (3 1/2" x 7 1/4")

Level: Headers - 1st Level | Member type: Header (Roof Beam) | Length: 3' 9" | 2018 IRC | 2018 NDS | ASD

Controls: Moment 90% used
Section adequacy 10.3% (capacity to spare)

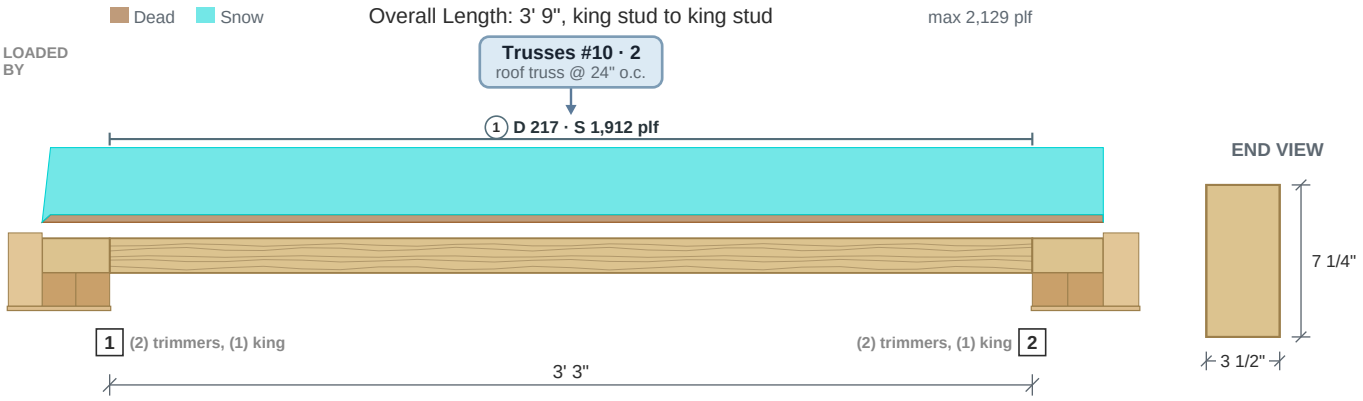

Drawing is conceptual. Locations are measured from the left end of the member; all dimensions are horizontal.

Design Results	Actual @ Location	Allowed	Result	LDF	Load Combination
Member Reaction (lbs)	3,469 @ 0	6,562 (3")	Passed (53% used)	--	
Shear (lbs)	2,180 @ 2' 7 3/4"	3,502	Passed (62% used)	1.15	D+S
Moment (Ft-lbs)	3,084 @ 1' 7 1/2"	3,438	Passed (90% used)	1.15	D+S
Live Load Defl. (in)	0.032 @ 1' 7"	0.17	Passed (2L/1,263)	--	S
Total Load Defl. (in)	0.036 @ 1' 7"	0.227	Passed (2L/1,131)	--	D+S

- Deflection criteria (IRC Table R301.7): floor live alone L/360; roof live or snow alone L/240; dead plus live L/180.
- Bending adjustment factors: CD = 1.15, CF = 1.30, CL = 1.00 (D+S).
- Beam stability: each moment checked against the bracing of its compression edge (CL = 1.00 where braced).
- Member self weight of 5.8 plf is included.
- Calculations per NDS 2018, ASD, every load combination with its own load duration factor.

	Bearing Length		Loads to Supports (lbs)			
Supports	**Provided**	**Required**	**Dead**	**Snow**	**Total**	**Load goes to**
1 @ 0	3"	1 9/16"	417	3,586	**4,003**	SpotFtg Hdr #19-1 (on (2) trimmers, (1) king stud)
2 @ 3' 3"	3"	1 9/16"	417	3,586	**4,003**	SpotFtg Hdr #19-2 (on (2) trimmers, (1) king stud)

Total = the governing ASD combination at that support; the category columns are service loads.

Lateral Bracing	Bracing Intervals	Comments
Top Edge (Lu)	continuous	braced by the sheathing
Bottom Edge (Lu)	3' 3" o/c	used for C_L only where the bottom edge is in compression

Vertical Loads	Location	Trib. Width	Dead (0.90)	Snow (1.15)	Comments
0 - Self Weight (PLF)	0 to 3' 3"	N/A	5.8	--	
1 - Uniform (PLF)	0 to 3' 3"	N/A	216.8	1,912	Linked from: Trusses #10, Support 2

Shear, Moment and Deflection

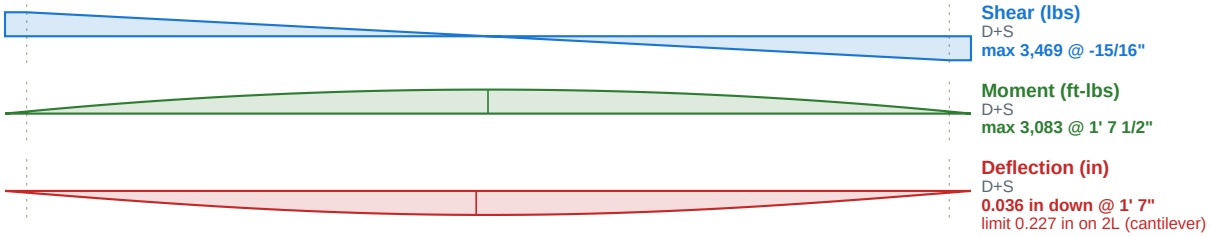

Header #20

PASSED

(2) 1 3/4" x 9 1/4" 2.0E Microlam LVL (Weyerhaeuser)

Level: Headers - 1st Level | Member type: Header (Roof Beam) | Length: 6' 9 1/2" | 2018 IRC | 2018 NDS | ASD

Controls: Moment 70% used
Section adequacy 30% (capacity to spare)

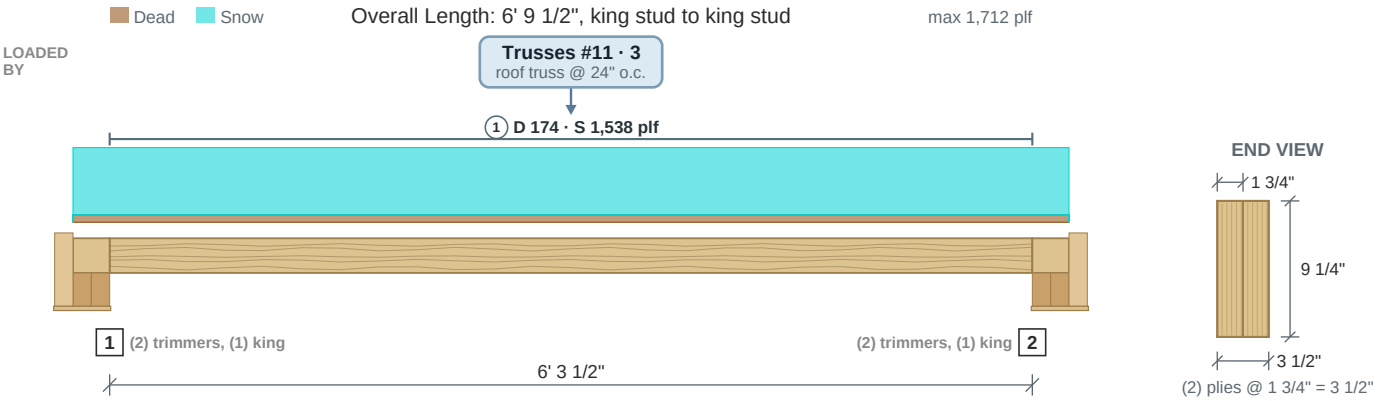

Drawing is conceptual. Locations are measured from the left end of the member; all dimensions are horizontal.

Design Results	Actual @ Location	Allowed	Result	LDF	Load Combination
Member Reaction (lbs)	5,415 @ 0	7,875 (3")	Passed (69% used)	--	
Shear (lbs)	4,088 @ 5' 6 1/4"	7,075	Passed (58% used)	1.15	D+S
Moment (Ft-lbs)	9,020 @ 3' 1 3/4"	12,884	Passed (70% used)	1.15	D+S
Live Load Defl. (in)	0.16 @ 3' 2 3/4"	0.324	Passed (2L/485)	--	S
Total Load Defl. (in)	0.18 @ 3' 2 3/4"	0.432	Passed (2L/433)	--	D+S

- Deflection criteria (IRC Table R301.7): floor live alone L/360; roof live or snow alone L/240; dead plus live L/180.
- Bending adjustment factors: CD = 1.15, CV = 1.036, CL = 1.00 (D+S).
- Beam stability: each moment checked against the bracing of its compression edge (CL = 1.00 where braced).
- Member self weight of 9.4 plf is included.
- Calculations per NDS 2018 and Weyerhaeuser ICC-ES ESR-1387, ASD, every load combination with its own load duration factor.

	Bearing Length		Loads to Supports (lbs)				
Supports	**Provided**	**Required**	**Dead**	**Floor Live**	**Snow**	**Total**	**Load goes to**
1 @ 0	3"	2 1/16"	624	--	5,221	**5,845**	Bearing wall (marked, trimmers) -- on (2) trimmers, (1) king stud
2 @ 6' 3 1/2"	3"	2 1/16"	624	--	5,221	**5,845**	Bearing wall (marked, trimmers) -- on (2) trimmers, (1) king stud

Total = the governing ASD combination at that support; the category columns are service loads.

Lateral Bracing	Bracing Intervals	Comments
Top Edge (Lu)	continuous	braced by the sheathing
Bottom Edge (Lu)	6' 3 1/2" o/c	used for C_L only where the bottom edge is in compression

Vertical Loads	Location	Trib. Width	Dead (0.90)	Floor Live (1.00)	Snow (1.15)	Comments
0 - Self Weight (PLF)	0 to 6' 3 1/2"	N/A	9.4	--	--	
1 - Uniform (PLF)	0 to 6' 3 1/2"	N/A	174.2	0	1,538	Linked from: Trusses #11, Support 3

Shear, Moment and Deflection

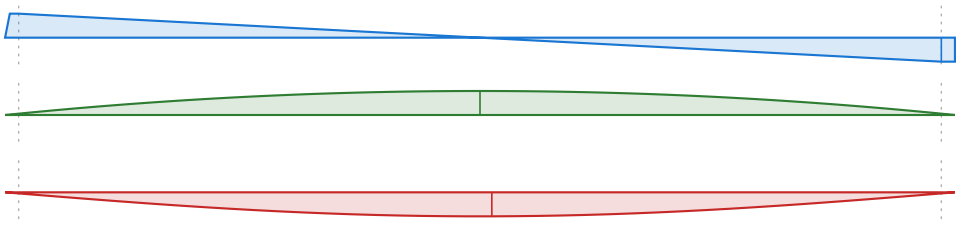

Shear (lbs)
D+S
max -5,415 @ 6' 3 1/2"

Moment (ft-lbs)
D+S
max 9,020 @ 3' 1 3/4"

Deflection (in)
D+S
0.147 in down @ 3' 2 3/4"
limit 0.432 in on 2L (cantilever)

Header #21

(1) 4x8 DF-L No. 2 (3 1/2" x 7 1/4")

Level: Headers - 1st Level | Member type: Header (Roof Beam) | Length: 2' 10" | 2018 IRC | 2018 NDS | ASD

PASSED

Controls: Bearing 27% used
Section adequacy 73.2% (capacity to spare)

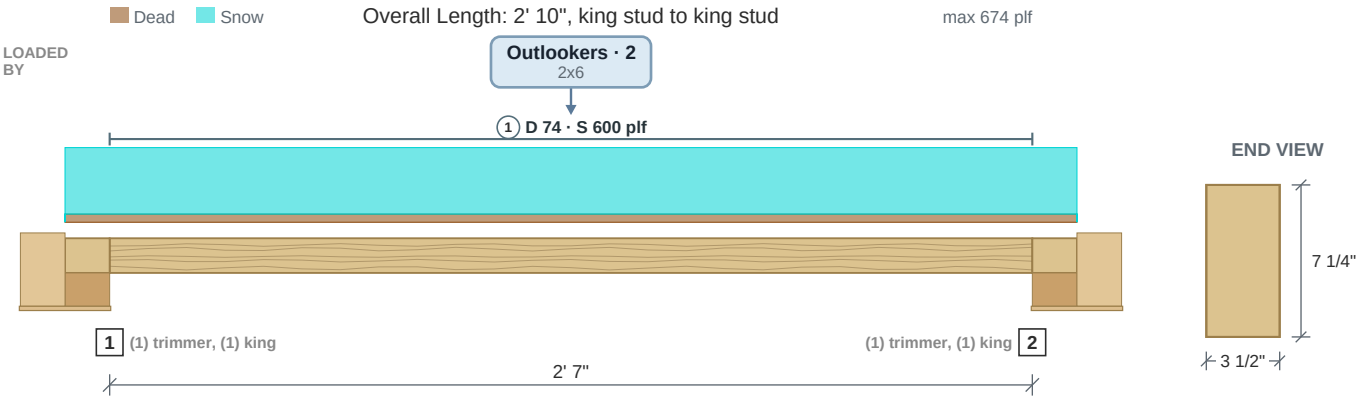

Drawing is conceptual. Locations are measured from the left end of the member; all dimensions are horizontal.

Design Results	Actual @ Location	Allowed	Result	LDF	Load Combination
Member Reaction (lbs)	878 @ 0	3,281 (1 1/2")	Passed (27% used)	--	
Shear (lbs)	467 @ 1' 11 3/4"	3,502	Passed (13% used)	1.15	D+S
Moment (Ft-lbs)	583 @ 1' 3 1/2"	3,438	Passed (17% used)	1.15	D+S
Live Load Defl. (in)	0.004 @ 1' 3 1/2"	0.131	Passed (2L/8,785)	--	S
Total Load Defl. (in)	0.004 @ 1' 3 1/2"	0.175	Passed (2L/7,758)	--	D+S

- Deflection criteria (IRC Table R301.7): floor live alone L/360; roof live or snow alone L/240; dead plus live L/180.
- Bending adjustment factors: CD = 1.15, CF = 1.30, CL = 1.00 (D+S).
- Beam stability: each moment checked against the bracing of its compression edge (CL = 1.00 where braced).
- Member self weight of 5.8 plf is included.
- Calculations per NDS 2018, ASD, every load combination with its own load duration factor.

	Bearing Length		Loads to Supports (lbs)			
Supports	**Provided**	**Required**	**Dead**	**Snow**	**Total**	**Load goes to**
1 @ 0	1 1/2"	3/8"	113	850	**963**	Bearing wall (marked, trimmers) -- on (1) trimmer, (1) king stud
2 @ 2' 7"	1 1/2"	3/8"	113	850	**963**	Bearing wall (marked, trimmers) -- on (1) trimmer, (1) king stud

Total = the governing ASD combination at that support; the category columns are service loads.

Lateral Bracing	Bracing Intervals	Comments
Top Edge (Lu)	continuous	braced by the sheathing
Bottom Edge (Lu)	2' 7" o/c	used for C_L only where the bottom edge is in compression

Vertical Loads	Location	Trib. Width	Dead (0.90)	Snow (1.15)	Comments
0 - Self Weight (PLF)	0 to 2' 7"	N/A	5.8	--	
1 - Uniform (PLF)	0 to 2' 7"	N/A	73.6	600	Linked from: Outlookers, Support 2

Shear, Moment and Deflection

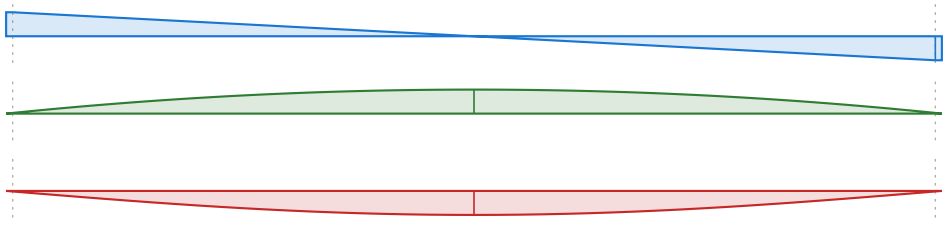

Shear (lbs)
D+S
max -878 @ 2' 7"

Moment (ft-lbs)
D+S
max 583 @ 1' 3 1/2"

Deflection (in)
D+S
0.004 in down @ 1' 3 1/2"
limit 0.175 in on 2L (cantilever)

Header #22

(1) 4x8 DF-L No. 2 (3 1/2" x 7 1/4")

Level: Headers - 1st Level | Member type: Header (Roof Beam) | Length: 2' 10" | 2018 IRC | 2018 NDS | ASD

PASSED

Controls: Bearing 27% used
Section adequacy 73.2% (capacity to spare)

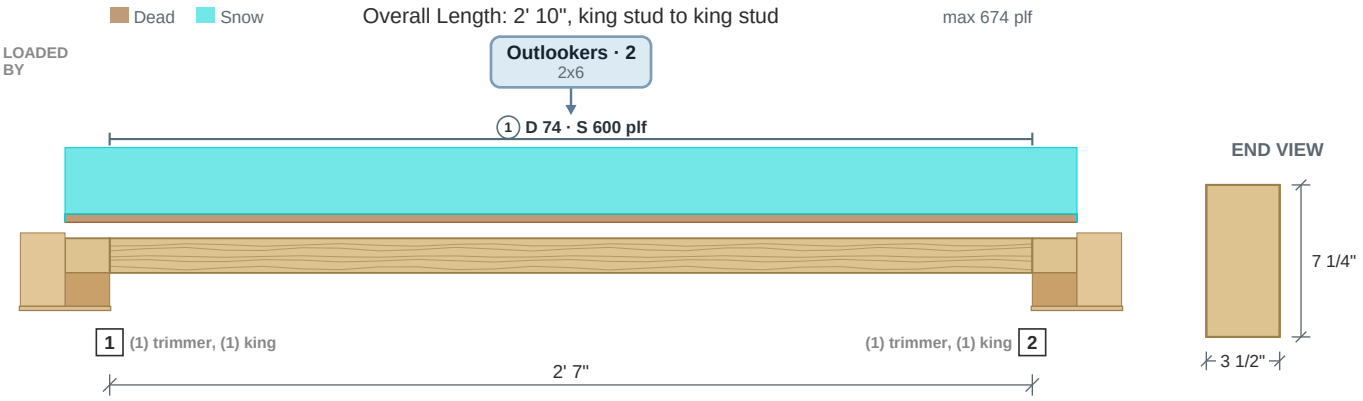

Drawing is conceptual. Locations are measured from the left end of the member; all dimensions are horizontal.

Design Results	Actual @ Location	Allowed	Result	LDF	Load Combination
Member Reaction (lbs)	878 @ 0	3,281 (1 1/2")	Passed (27% used)	--	
Shear (lbs)	467 @ 1' 11 3/4"	3,502	Passed (13% used)	1.15	D+S
Moment (Ft-lbs)	583 @ 1' 3 1/2"	3,438	Passed (17% used)	1.15	D+S
Live Load Defl. (in)	0.004 @ 1' 3 1/2"	0.131	Passed (2L/8,785)	--	S
Total Load Defl. (in)	0.004 @ 1' 3 1/2"	0.175	Passed (2L/7,758)	--	D+S

- Deflection criteria (IRC Table R301.7): floor live alone L/360; roof live or snow alone L/240; dead plus live L/180.
- Bending adjustment factors: CD = 1.15, CF = 1.30, CL = 1.00 (D+S).
- Beam stability: each moment checked against the bracing of its compression edge (CL = 1.00 where braced).
- Member self weight of 5.8 plf is included.
- Calculations per NDS 2018, ASD, every load combination with its own load duration factor.

	Bearing Length		Loads to Supports (lbs)			
Supports	**Provided**	**Required**	**Dead**	**Snow**	**Total**	**Load goes to**
1 @ 0	1 1/2"	3/8"	113	850	**963**	Bearing wall (marked, trimmers) -- on (1) trimmer, (1) king stud
2 @ 2' 7"	1 1/2"	3/8"	113	850	**963**	Bearing wall (marked, trimmers) -- on (1) trimmer, (1) king stud

Total = the governing ASD combination at that support; the category columns are service loads.

Lateral Bracing	Bracing Intervals	Comments
Top Edge (Lu)	continuous	braced by the sheathing
Bottom Edge (Lu)	2' 7" o/c	used for C_L only where the bottom edge is in compression

Vertical Loads	Location	Trib. Width	Dead (0.90)	Snow (1.15)	Comments
0 - Self Weight (PLF)	0 to 2' 7"	N/A	5.8	--	
1 - Uniform (PLF)	0 to 2' 7"	N/A	73.6	600	Linked from: Outlookers, Support 2

Shear, Moment and Deflection

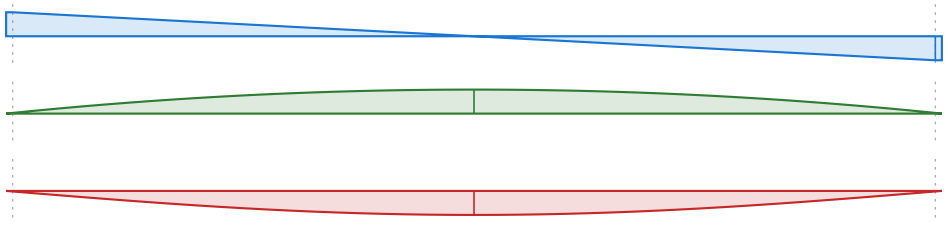

Shear (lbs)
D+S
max -878 @ 2' 7"

Moment (ft-lbs)
D+S
max 583 @ 1' 3 1/2"

Deflection (in)
D+S
0.004 in down @ 1' 3 1/2"
limit 0.175 in on 2L (cantilever)

Header #23

(1) 4x8 DF-L No. 2 (3 1/2" x 7 1/4")

Level: Headers - 1st Level | Member type: Header (Roof Beam) | Length: 3' 6" | 2018 IRC | 2018 NDS | ASD

PASSED

Controls: Bearing 55% used
Section adequacy 45% (capacity to spare)

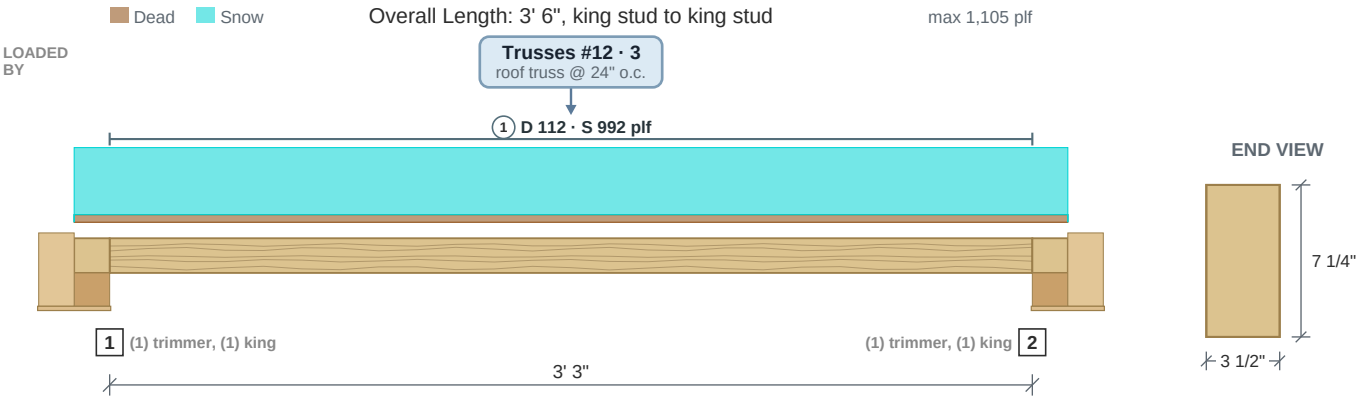

Drawing is conceptual. Locations are measured from the left end of the member; all dimensions are horizontal.

Design Results	Actual @ Location	Allowed	Result	LDF	Load Combination
Member Reaction (lbs)	1,804 @ 0	3,281 (1 1/2")	Passed (55% used)	--	
Shear (lbs)	1,134 @ 7 1/4"	3,502	Passed (32% used)	1.15	D+S
Moment (Ft-lbs)	1,533 @ 1' 7 1/2"	3,438	Passed (45% used)	1.15	D+S
Live Load Defl. (in)	0.015 @ 1' 7 1/2"	0.166	Passed (2L/2,604)	--	S
Total Load Defl. (in)	0.017 @ 1' 7 1/2"	0.222	Passed (2L/2,327)	--	D+S

- Deflection criteria (IRC Table R301.7): floor live alone L/360; roof live or snow alone L/240; dead plus live L/180.
- Bending adjustment factors: CD = 1.15, CF = 1.30, CL = 1.00 (D+S).
- Beam stability: each moment checked against the bracing of its compression edge (CL = 1.00 where braced).
- Member self weight of 5.8 plf is included.
- Calculations per NDS 2018, ASD, every load combination with its own load duration factor.

	Bearing Length		Loads to Supports (lbs)			
Supports	**Provided**	**Required**	**Dead**	**Snow**	**Total**	**Load goes to**
1 @ 0	1 1/2"	13/16"	207	1,736	**1,943**	Bearing wall (marked, trimmers) -- on (1) trimmer, (1) king stud
2 @ 3' 3"	1 1/2"	13/16"	207	1,736	**1,943**	Bearing wall (marked, trimmers) -- on (1) trimmer, (1) king stud

Total = the governing ASD combination at that support; the category columns are service loads.

Lateral Bracing	Bracing Intervals	Comments
Top Edge (Lu)	continuous	braced by the sheathing
Bottom Edge (Lu)	3' 3" o/c	used for C_L only where the bottom edge is in compression

Vertical Loads	Location	Trib. Width	Dead (0.90)	Snow (1.15)	Comments
0 - Self Weight (PLF)	0 to 3' 3"	N/A	5.8	--	
1 - Uniform (PLF)	0 to 3' 3"	N/A	112.4	992.2	Linked from: Trusses #12, Support 3

Shear, Moment and Deflection

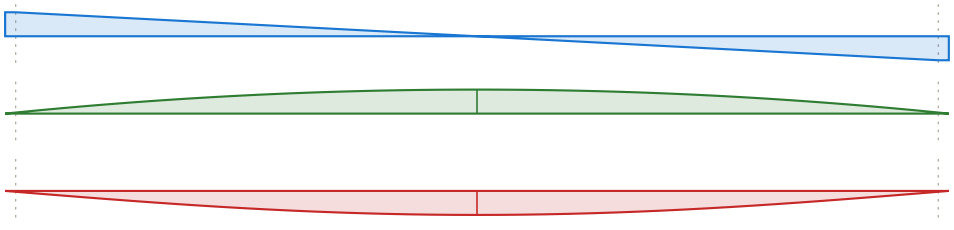

Shear (lbs)
D+S
max 1,804 @ -7/16"

Moment (ft-lbs)
D+S
max 1,533 @ 1' 7 1/2"

Deflection (in)
D+S
0.017 in down @ 1' 7 1/2"
limit 0.222 in on 2L (cantilever)

Header #24

(1) 4x8 DF-L No. 2 (3 1/2" x 7 1/4")

Level: Headers - 1st Level | Member type: Header (Roof Beam) | Length: 3' 6" | 2018 IRC | 2018 NDS | ASD

PASSED

Controls: Bearing 55% used
Section adequacy 45% (capacity to spare)

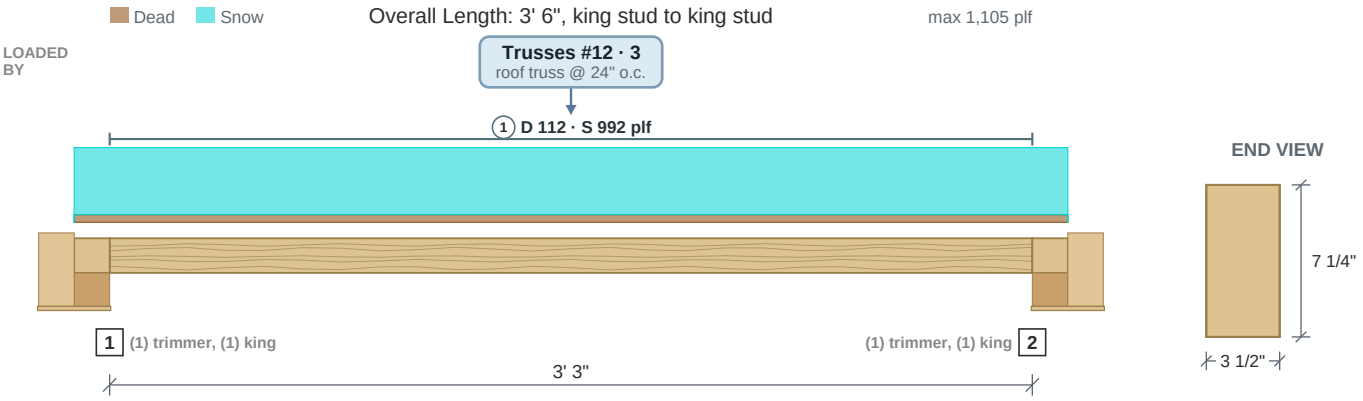

Drawing is conceptual. Locations are measured from the left end of the member; all dimensions are horizontal.

Design Results	Actual @ Location	Allowed	Result	LDF	Load Combination
Member Reaction (lbs)	1,804 @ 0	3,281 (1 1/2")	Passed (55% used)	--	
Shear (lbs)	1,134 @ 7 1/4"	3,502	Passed (32% used)	1.15	D+S
Moment (Ft-lbs)	1,533 @ 1' 7 1/2"	3,438	Passed (45% used)	1.15	D+S
Live Load Defl. (in)	0.015 @ 1' 7 1/2"	0.166	Passed (2L/2,604)	--	S
Total Load Defl. (in)	0.017 @ 1' 7 1/2"	0.222	Passed (2L/2,327)	--	D+S

- Deflection criteria (IRC Table R301.7): floor live alone L/360; roof live or snow alone L/240; dead plus live L/180.
- Bending adjustment factors: CD = 1.15, CF = 1.30, CL = 1.00 (D+S).
- Beam stability: each moment checked against the bracing of its compression edge (CL = 1.00 where braced).
- Member self weight of 5.8 plf is included.
- Calculations per NDS 2018, ASD, every load combination with its own load duration factor.

	Bearing Length		Loads to Supports (lbs)			
Supports	**Provided**	**Required**	**Dead**	**Snow**	**Total**	**Load goes to**
1 @ 0	1 1/2"	13/16"	207	1,736	**1,943**	Bearing wall (marked, trimmers) -- on (1) trimmer, (1) king stud
2 @ 3' 3"	1 1/2"	13/16"	207	1,736	**1,943**	Bearing wall (marked, trimmers) -- on (1) trimmer, (1) king stud

Total = the governing ASD combination at that support; the category columns are service loads.

Lateral Bracing	Bracing Intervals	Comments
Top Edge (Lu)	continuous	braced by the sheathing
Bottom Edge (Lu)	3' 3" o/c	used for C_L only where the bottom edge is in compression

Vertical Loads	Location	Trib. Width	Dead (0.90)	Snow (1.15)	Comments
0 - Self Weight (PLF)	0 to 3' 3"	N/A	5.8	--	
1 - Uniform (PLF)	0 to 3' 3"	N/A	112.4	992.2	Linked from: Trusses #12, Support 3

Shear, Moment and Deflection

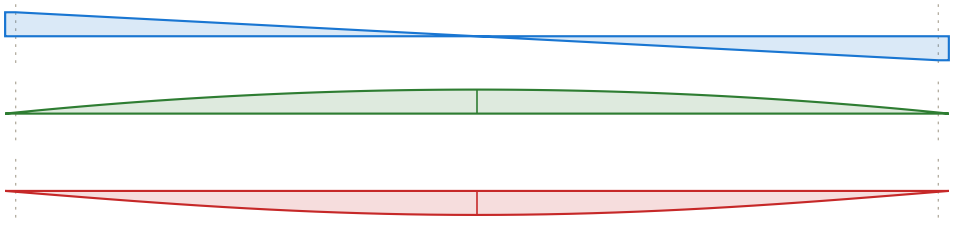

Shear (lbs)
D+S
max 1,804 @ -7/16"

Moment (ft-lbs)
D+S
max 1,533 @ 1' 7 1/2"

Deflection (in)
D+S
0.017 in down @ 1' 7 1/2"
limit 0.222 in on 2L (cantilever)

Header #25

(1) 4x8 DF-L No. 2 (3 1/2" x 7 1/4")

Level: Headers - 1st Level | Member type: Header (Roof Beam) | Length: 3' 6" | 2018 IRC | 2018 NDS | ASD

PASSED

Controls: Bearing 94% used
Section adequacy 5.7% (capacity to spare)

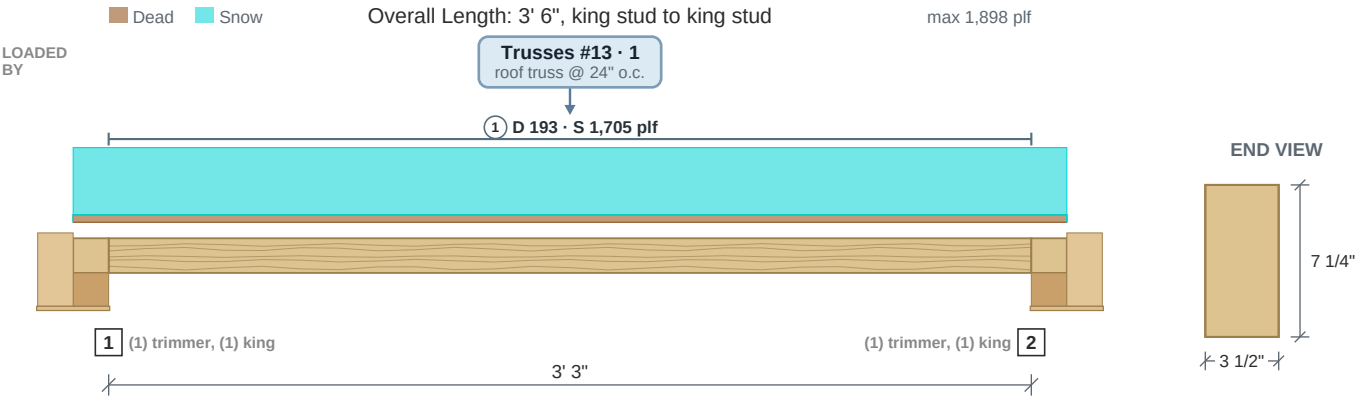

Drawing is conceptual. Locations are measured from the left end of the member; all dimensions are horizontal.

Design Results	Actual @ Location	Allowed	Result	LDF	Load Combination
Member Reaction (lbs)	3,093 @ 0	3,281 (1 1/2")	Passed (94% used)	--	
Shear (lbs)	1,943 @ 2' 7 3/4"	3,502	Passed (56% used)	1.15	D+S
Moment (Ft-lbs)	2,707 @ 1' 7 1/2"	3,438	Passed (79% used)	1.15	D+S
Live Load Defl. (in)	0.028 @ 1' 7"	0.169	Passed (2L/1,451)	--	S
Total Load Defl. (in)	0.031 @ 1' 7"	0.225	Passed (2L/1,299)	--	D+S

- Deflection criteria (IRC Table R301.7): floor live alone L/360; roof live or snow alone L/240; dead plus live L/180.
- Bending adjustment factors: CD = 1.15, CF = 1.30, CL = 1.00 (D+S).
- Beam stability: each moment checked against the bracing of its compression edge (CL = 1.00 where braced).
- Member self weight of 5.8 plf is included.
- Calculations per NDS 2018, ASD, every load combination with its own load duration factor.

	Bearing Length		Loads to Supports (lbs)			
Supports	Provided	Required	Dead	Snow	Total	Load goes to
1 @ 0	1 1/2"	1 7/16"	348	2,983	**3,331**	SpotFtg Bm #2-2 (on (1) trimmer, (1) king stud)
2 @ 3' 3"	1 1/2"	1 7/16"	348	2,983	**3,331**	SpotFtg Hdr #25-2 (on (1) trimmer, (1) king stud)

Total = the governing ASD combination at that support; the category columns are service loads.

Lateral Bracing	Bracing Intervals	Comments
Top Edge (Lu)	continuous	braced by the sheathing
Bottom Edge (Lu)	3' 3" o/c	used for C_L only where the bottom edge is in compression

Vertical Loads	Location	Trib. Width	Dead (0.90)	Snow (1.15)	Comments
0 - Self Weight (PLF)	0 to 3' 3"	N/A	5.8	--	
1 - Uniform (PLF)	0 to 3' 3"	N/A	193.2	1,705	Linked from: Trusses #13, Support 1

Shear, Moment and Deflection

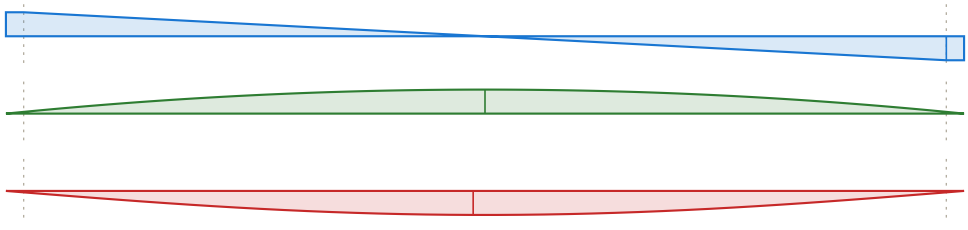

Shear (lbs)
D+S
max -3,093 @ 3' 3"

Moment (ft-lbs)
D+S
max 2,707 @ 1' 7 1/2"

Deflection (in)
D+S
0.031 in down @ 1' 7"
limit 0.225 in on 2L (cantilever)

Header #26

PASSED

(1) 6x8 DF-L No. 2 (5 1/2" x 7 1/2")

Level: Headers - 1st Level | Member type: Header (Roof Beam) | Length: 3' 6" | 2018 IRC | 2018 NDS | ASD

Controls: Moment 90% used
Section adequacy 10.3% (capacity to spare)

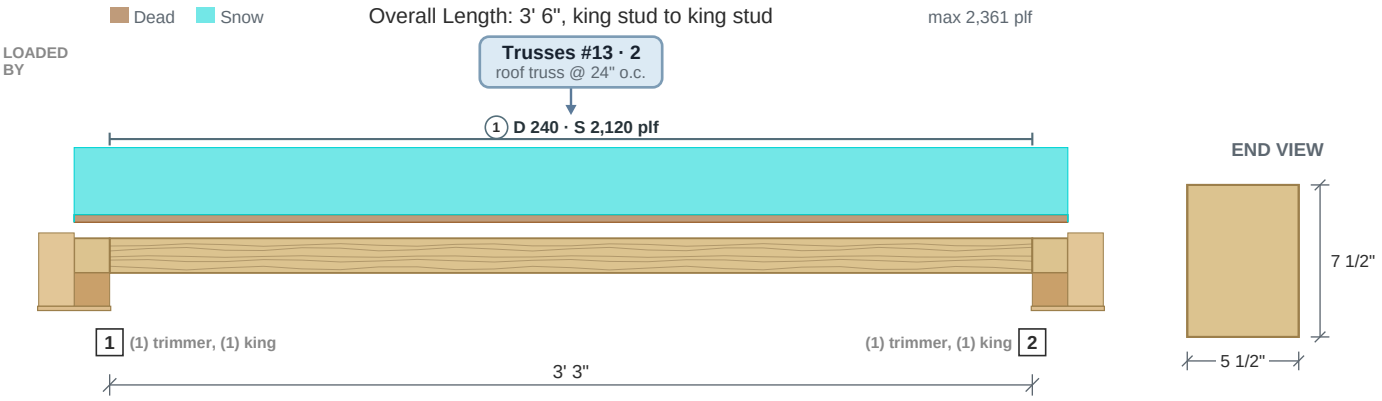

Drawing is conceptual. Locations are measured from the left end of the member; all dimensions are horizontal.

Design Results	Actual @ Location	Allowed	Result	LDF	Load Combination
Member Reaction (lbs)	3,851 @ 0	5,156 (1 1/2")	Passed (75% used)	--	
Shear (lbs)	2,370 @ 2' 7 1/2"	5,376	Passed (44% used)	1.15	D+S
Moment (Ft-lbs)	3,323 @ 1' 7 1/2"	3,706	Passed (90% used)	1.15	D+S
Live Load Defl. (in)	0.024 @ 1' 7"	0.168	Passed (2L/1,684)	--	S
Total Load Defl. (in)	0.027 @ 1' 7"	0.223	Passed (2L/1,507)	--	D+S

- Deflection criteria (IRC Table R301.7): floor live alone L/360; roof live or snow alone L/240; dead plus live L/180.
- Bending adjustment factors: CD = 1.15, CL = 1.00 (D+S).
- Beam stability: each moment checked against the bracing of its compression edge (CL = 1.00 where braced).
- Member self weight of 9.4 plf is included.
- Calculations per NDS 2018, ASD, every load combination with its own load duration factor.

	Bearing Length		Loads to Supports (lbs)			
Supports	**Provided**	**Required**	**Dead**	**Snow**	**Total**	**Load goes to**
1 @ 0	1 1/2"	1 1/8"	437	3,711	**4,148**	SpotFtg Hdr #26-1 (on (1) trimmer, (1) king stud)
2 @ 3' 3"	1 1/2"	1 1/8"	437	3,711	**4,148**	SpotFtg Hdr #26-2 (on (1) trimmer, (1) king stud)

Total = the governing ASD combination at that support; the category columns are service loads.

Lateral Bracing	Bracing Intervals	Comments
Top Edge (Lu)	continuous	braced by the sheathing
Bottom Edge (Lu)	3' 3" o/c	used for C_L only where the bottom edge is in compression

Vertical Loads	Location	Trib. Width	Dead (0.90)	Snow (1.15)	Comments
0 - Self Weight (PLF)	0 to 3' 3"	N/A	9.4	--	
1 - Uniform (PLF)	0 to 3' 3"	N/A	240.3	2,120	Linked from: Trusses #13, Support 2

Shear, Moment and Deflection

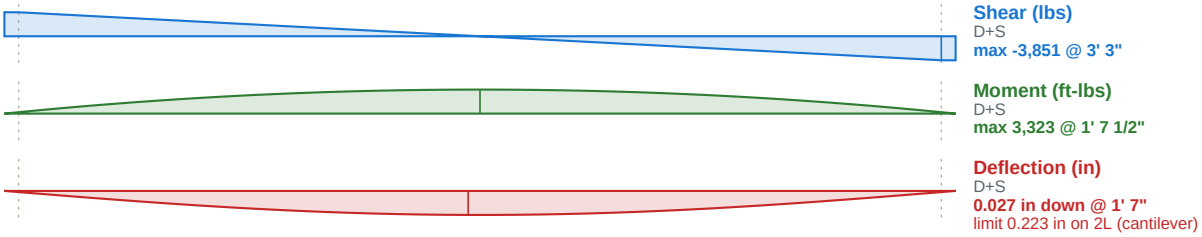

Header #27

(1) 6x10 DF-L No. 2 (5 1/2" x 9 1/2")

Level: Headers - 1st Level | Member type: Header (Roof Beam) | Length: 5' 6 1/2" | 2018 IRC | 2018 NDS | ASD

PASSED

Controls: Moment 77% used
Section adequacy 22.8% (capacity to spare)

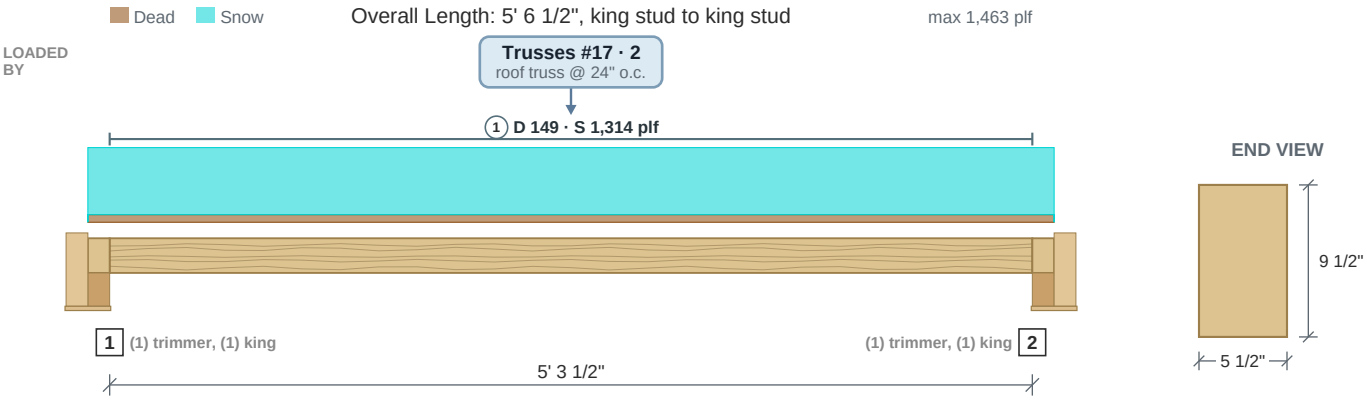

Drawing is conceptual. Locations are measured from the left end of the member; all dimensions are horizontal.

Design Results	Actual @ Location	Allowed	Result	LDF	Load Combination
Member Reaction (lbs)	3,903 @ 0	5,156 (1 1/2")	Passed (76% used)	--	
Shear (lbs)	2,735 @ 4' 6"	6,810	Passed (40% used)	1.15	D+S
Moment (Ft-lbs)	5,357 @ 2' 7 3/4"	6,937	Passed (77% used)	1.15	D+S
Live Load Defl. (in)	0.049 @ 2' 7 3/4"	0.27	Passed (2L/1,324)	--	S
Total Load Defl. (in)	0.055 @ 2' 7 3/4"	0.359	Passed (2L/1,179)	--	D+S

- Deflection criteria (IRC Table R301.7): floor live alone L/360; roof live or snow alone L/240; dead plus live L/180.
- Bending adjustment factors: CD = 1.15, CL = 1.00 (D+S).
- Beam stability: each moment checked against the bracing of its compression edge (CL = 1.00 where braced).
- Member self weight of 11.9 plf is included.
- Calculations per NDS 2018, ASD, every load combination with its own load duration factor.

	Bearing Length		Loads to Supports (lbs)			
Supports	Provided	Required	Dead	Snow	Total	Load goes to
1 @ 0	1 1/2"	1 1/8"	446	3,641	**4,087**	Bearing wall (marked, trimmers) -- on (1) trimmer, (1) king stud
2 @ 5' 3 1/2"	1 1/2"	1 1/8"	446	3,641	**4,087**	Bearing wall (marked, trimmers) -- on (1) trimmer, (1) king stud

Total = the governing ASD combination at that support; the category columns are service loads.

Lateral Bracing	Bracing Intervals	Comments
Top Edge (Lu)	continuous	braced by the sheathing
Bottom Edge (Lu)	5' 3 1/2" o/c	used for C_L only where the bottom edge is in compression

Vertical Loads	Location	Trib. Width	Dead (0.90)	Snow (1.15)	Comments
0 - Self Weight (PLF)	0 to 5' 3 1/2"	N/A	11.9	--	
1 - Uniform (PLF)	0 to 5' 3 1/2"	N/A	148.9	1,314	Linked from: Trusses #17, Support 2

Shear, Moment and Deflection

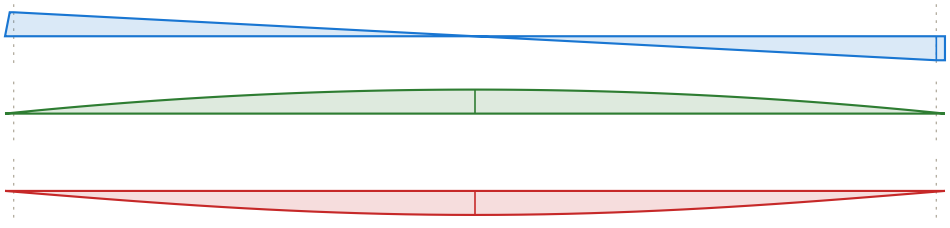

Shear (lbs)
D+S
max -3,903 @ 5' 3 1/2"

Moment (ft-lbs)
D+S
max 5,356 @ 2' 7 3/4"

Deflection (in)
D+S
0.055 in down @ 2' 7 3/4"
limit 0.359 in on 2L (cantilever)

Header #28

(3) 1 3/4" x 9 1/4" 2.0E Microlam LVL (Weyerhaeuser)

Level: Headers - 1st Level | Member type: Header (Roof Beam) | Length: 4' 3" | 2018 IRC | 2018 NDS | ASD

PASSED

Controls: Shear 76% used

Section adequacy 23.7% (capacity to spare)

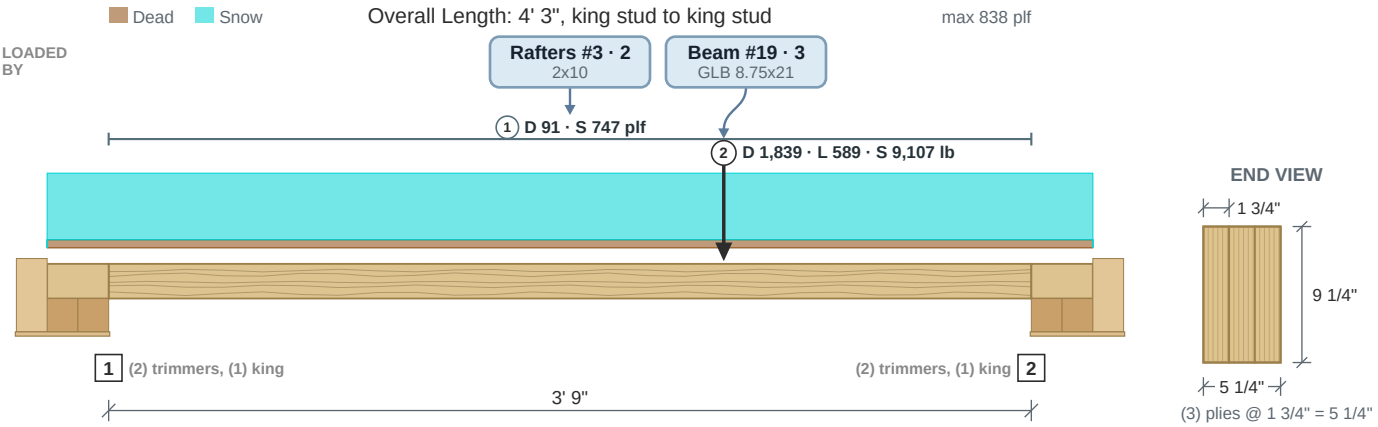

Drawing is conceptual. Locations are measured from the left end of the member; all dimensions are horizontal.

Design Results	Actual @ Location	Allowed	Result	LDF	Load Combination
Member Reaction (lbs)	8,753 @ 3' 9"	11,812 (3")	Passed (74% used)	--	
Shear (lbs)	8,096 @ 2' 11 3/4"	10,613	Passed (76% used)	1.15	D+S
Moment (Ft-lbs)	11,119 @ 2' 6"	19,326	Passed (58% used)	1.15	D+S
Live Load Defl. (in)	0.052 @ 2' 1/4"	0.195	Passed (2L/894)	--	S
Total Load Defl. (in)	0.062 @ 2' 1/4"	0.26	Passed (2L/750)	--	D+S

- Deflection criteria (IRC Table R301.7): floor live alone L/360; roof live or snow alone L/240; dead plus live L/180.
- Bending adjustment factors: CD = 1.15, CV = 1.036, CL = 1.00 (D+S).
- Beam stability: each moment checked against the bracing of its compression edge (CL = 1.00 where braced).
- Member self weight of 14.2 plf is included.
- Calculations per NDS 2018 and Weyerhaeuser ICC-ES ESR-1387, ASD, every load combination with its own load duration factor.

	Bearing Length		Loads to Supports (lbs)				
Supports	**Provided**	**Required**	**Dead**	**Floor Live**	**Snow**	**Total**	**Load goes to**
1 @ 0	3"	1 3/8"	859	203	4,743	**5,602**	SpotFtg Hdr #28-1 (on (2) trimmers, (1) king stud)
2 @ 3' 9"	3"	2 1/4"	1,426	386	7,541	**8,966**	SpotFtg Hdr #28-2 (on (2) trimmers, (1) king stud)

Total = the governing ASD combination at that support; the category columns are service loads.

Lateral Bracing	Bracing Intervals	Comments
Top Edge (Lu)	continuous	braced by the sheathing
Bottom Edge (Lu)	3' 9" o/c	used for C_L only where the bottom edge is in compression

Vertical Loads	Location	Trib. Width	Dead (0.90)	Floor Live (1.00)	Snow (1.15)	Comments
0 - Self Weight (PLF)	0 to 3' 9"	N/A	14.2	--	--	
1 - Uniform (PLF)	0 to 3' 9"	N/A	90.8	--	747.5	Linked from: Rafters #3, Support 2
2 - Point (lb)	2' 6"	N/A	1,839	589.5	9,107	Linked from: Beam #19, Support 3

Shear, Moment and Deflection

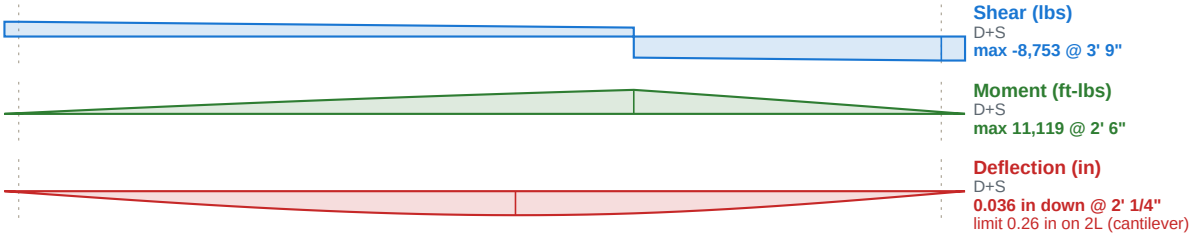

Header #29

PASSED

(4) 1 3/4" x 9 1/4" 2.0E Microlam LVL (Weyerhaeuser)

Level: Headers - 1st Level | Member type: Header (Roof Beam) | Length: 4' 9" | 2018 IRC | 2018 NDS | ASD

Controls: Moment 90% used
Section adequacy 9.9% (capacity to spare)

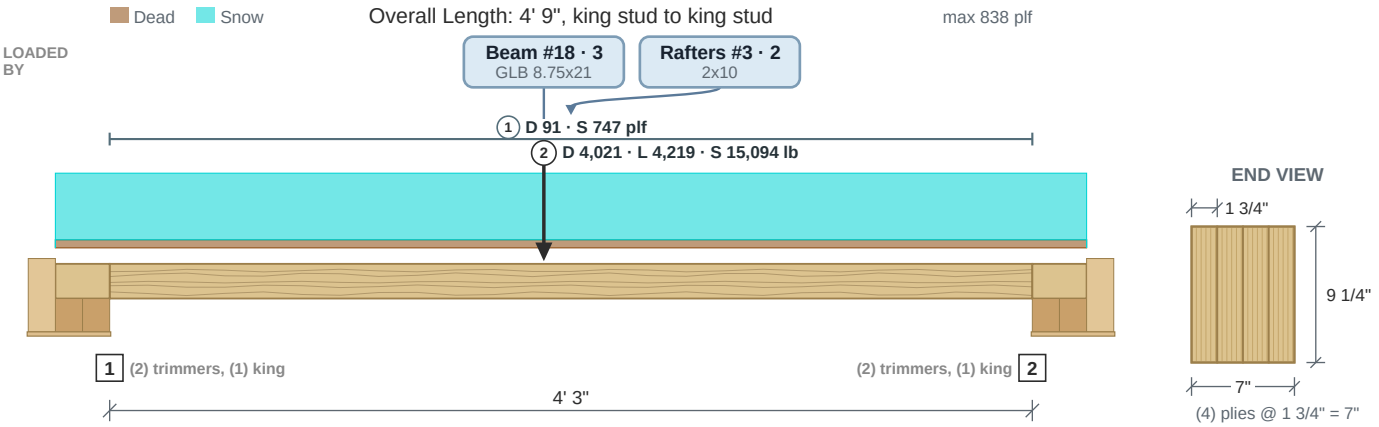

Drawing is conceptual. Locations are measured from the left end of the member; all dimensions are horizontal.

Design Results	Actual @ Location	Allowed	Result	LDF	Load Combination
Member Reaction (lbs)	11,895 @ 0	15,750 (3")	Passed (76% used)	--	
Shear (lbs)	11,234 @ 9 1/4"	14,150	Passed (79% used)	1.15	D+S
Moment (Ft-lbs)	23,224 @ 2'	25,768	Passed (90% used)	1.15	D+S
Live Load Defl. (in)	0.091 @ 2' 1 5/16"	0.222	Passed (2L/584)	--	S
Total Load Defl. (in)	0.114 @ 2' 1 5/16"	0.296	Passed (2L/466)	--	D+S

- Deflection criteria (IRC Table R301.7): floor live alone L/360; roof live or snow alone L/240; dead plus live L/180.
- Bending adjustment factors: CD = 1.15, CV = 1.036, CL = 1.00 (D+S).
- Beam stability: each moment checked against the bracing of its compression edge (CL = 1.00 where braced).
- Member self weight of 18.9 plf is included.
- Calculations per NDS 2018 and Weyerhaeuser ICC-ES ESR-1387, ASD, every load combination with its own load duration factor.

	Bearing Length		Loads to Supports (lbs)				
Supports	**Provided**	**Required**	**Dead**	**Floor Live**	**Snow**	**Total**	**Load goes to**
1 @ 0	3"	2 1/4"	2,380	2,224	9,730	**12,109**	SpotFtg Hdr #29-1 (on (2) trimmers, (1) king stud)
2 @ 4' 3"	3"	2 1/16"	2,162	1,995	8,915	**11,078**	SpotFtg Hdr #29-2 (on (2) trimmers, (1) king stud)

Total = the governing ASD combination at that support; the category columns are service loads.

Lateral Bracing	Bracing Intervals	Comments
Top Edge (Lu)	continuous	braced by the sheathing
Bottom Edge (Lu)	4' 3" o/c	used for C_L only where the bottom edge is in compression

Vertical Loads	Location	Trib. Width	Dead (0.90)	Floor Live (1.00)	Snow (1.15)	Comments
0 - Self Weight (PLF)	0 to 4' 3"	N/A	18.9	--	--	
1 - Uniform (PLF)	0 to 4' 3"	N/A	90.8	--	747.5	Linked from: Rafters #3, Support 2
2 - Point (lb)	2'	N/A	4,021	4,219	15,094	Linked from: Beam #18, Support 3

Shear, Moment and Deflection

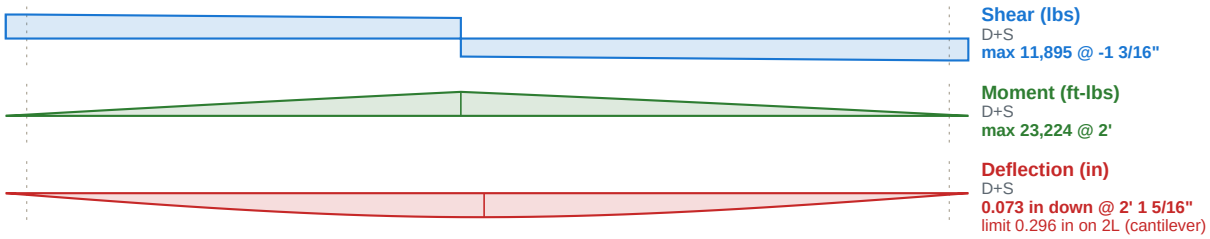

Header #30

PASSED

(4) 1 3/4" x 11 1/4" 2.0E Microlam LVL (Weyerhaeuser)

Level: Headers - 1st Level | Member type: Header (Roof Beam) | Length: 4' 9" | 2018 IRC | 2018 NDS | ASD

Controls: Bearing 82% used
Section adequacy 18.1% (capacity to spare)

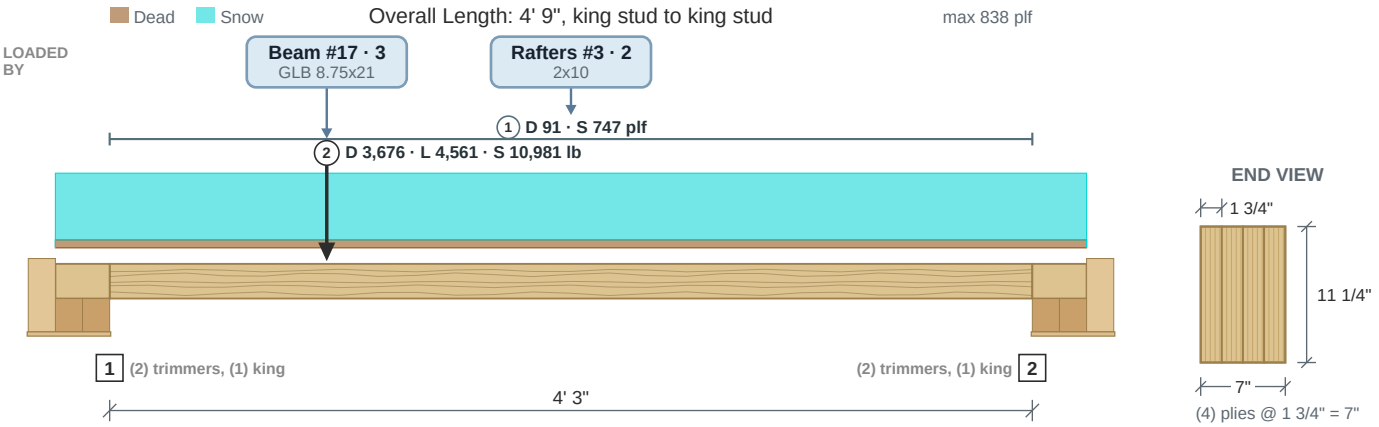

Drawing is conceptual. Locations are measured from the left end of the member; all dimensions are horizontal.

Design Results	Actual @ Location	Allowed	Result	LDF	Load Combination
Member Reaction (lbs)	12,891 @ 0	15,750 (3")	Passed (82% used)	--	
Shear (lbs)	12,259 @ 11 1/4"	17,210	Passed (71% used)	1.15	D+0.75L+0.75S
Moment (Ft-lbs)	13,918 @ 1'	37,116	Passed (37% used)	1.15	D+0.75L+0.75S
Live Load Defl. (in)	0.033 @ 1' 10 3/8"	0.22	Passed (2L/1,588)	--	S
Total Load Defl. (in)	0.044 @ 1' 10 3/8"	0.293	Passed (2L/1,211)	--	D+0.75L+0.75S

- Deflection criteria (IRC Table R301.7): floor live alone L/360; roof live or snow alone L/240; dead plus live L/180.
- Bending adjustment factors: CD = 1.15, CV = 1.009, CL = 1.00 (D+0.75L+0.75S).
- Beam stability: each moment checked against the bracing of its compression edge (CL = 1.00 where braced).
- Member self weight of 23 plf is included.
- Calculations per NDS 2018 and Weyerhaeuser ICC-ES ESR-1387, ASD, every load combination with its own load duration factor.

	Bearing Length		Loads to Supports (lbs)				
Supports	**Provided**	**Required**	**Dead**	**Floor Live**	**Snow**	**Total**	**Load goes to**
1 @ 0	3"	2 7/16"	3,019	3,414	9,974	**13,060**	SpotFtg Hdr #30-1 (on (2) trimmers, (1) king stud)
2 @ 4' 3"	3"	1 1/16"	1,197	1,146	4,558	**5,755**	SpotFtg Hdr #30-2 (on (2) trimmers, (1) king stud)

Total = the governing ASD combination at that support; the category columns are service loads.

Lateral Bracing	Bracing Intervals	Comments
Top Edge (Lu)	continuous	braced by the sheathing
Bottom Edge (Lu)	4' 3" o/c	used for C_L only where the bottom edge is in compression

Vertical Loads	Location	Trib. Width	Dead (0.90)	Floor Live (1.00)	Snow (1.15)	Comments
0 - Self Weight (PLF)	0 to 4' 3"	N/A	23	--	--	
1 - Uniform (PLF)	0 to 4' 3"	N/A	90.8	--	747.5	Linked from: Rafters #3, Support 2
2 - Point (lb)	1'	N/A	3,676	4,561	10,981	Linked from: Beam #17, Support 3

Shear, Moment and Deflection

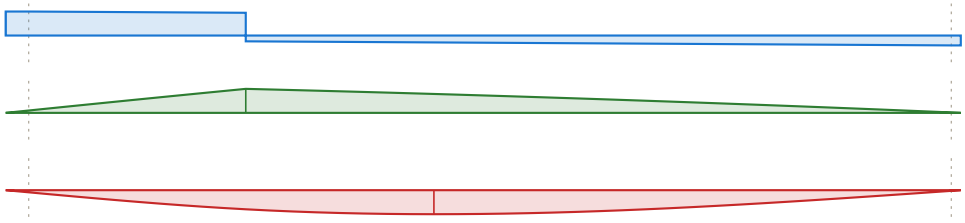

Shear (lbs)
D+0.75L+0.75S
max 12,891 @ -1 1/4"

Moment (ft-lbs)
D+0.75L+0.75S
max 13,917 @ 1'

Deflection (in)
D+0.75L+0.75S
0.023 in down @ 1' 10 3/8"
limit 0.293 in on 2L (cantilever)

Header #31

W10x22 (ASTM A992, Fy 50 ksi)

Level: Headers - 1st Level | Member type: Header (Roof Beam) | Length: 11' | 2018 IRC | 2018 NDS | ASD

PASSED

Controls: Moment 94% used
Section adequacy 6% (capacity to spare)

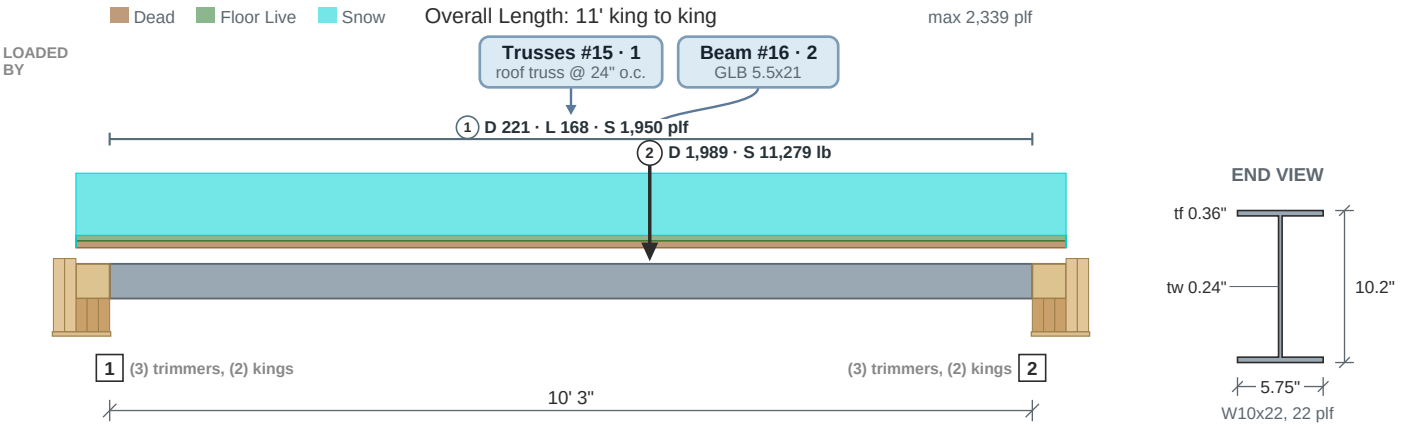

Drawing is conceptual. Locations are measured from the left end of the member; all dimensions are horizontal.

Design Results	Actual @ Location	Allowed	Result	LDF	Load Combination
Shear (lbs)	19,006 @ 10' 3"	48,960	Passed (39% used)	--	D+S
Moment (Ft-lbs)	60,968 @ 6'	64,870	Passed (94% used)	--	D+S
Live Load Defl. (in)	0.264 @ 5' 3"	0.512	Passed (L/465)	--	S
Total Load Defl. (in)	0.304 @ 5' 3"	0.683	Passed (L/405)	--	D+S

- Deflection criteria (IRC Table R301.7): floor live alone L/360; roof live or snow alone L/240; dead plus live L/180.
- Member self weight of 22 plf is included.
- Calculations per AISC 360-16, ASD, every load combination with its own allowables.

	Bearing Length		Loads to Supports (lbs)				
Supports	Provided	Required	Dead	Floor Live	Snow	Total	Load goes to
1 @ 0	4 1/2"	--	2,161	925	15,402	**17,563**	SpotFtg Hdr #31-1 (on (3) trimmers, (2) king studs)
2 @ 10' 3"	4 1/2"	--	2,501	925	17,327	**19,828**	SpotFtg Hdr #31-2 (on (3) trimmers, (2) king studs)

Total = the governing ASD combination at that support; the category columns are service loads.

Lateral Bracing	Bracing Intervals	Comments
Top Edge (Lu)	continuous	braced by the sheathing
Bottom Edge (Lu)	10' 3" o/c	used for C_L only where the bottom edge is in compression

Vertical Loads	Location	Trib. Width	Dead (0.90)	Floor Live (1.00)	Snow (1.15)	Comments
0 - Self Weight (PLF)	0 to 10' 3"	N/A	22	--	--	
1 - Uniform (PLF)	0 to 10' 3"	N/A	221	168.3	1,950	Linked from: Trusses #15, Support 1
2 - Point (lb)	6'	N/A	1,989	--	11,279	Linked from: Beam #16, Support 2

Shear, Moment and Deflection

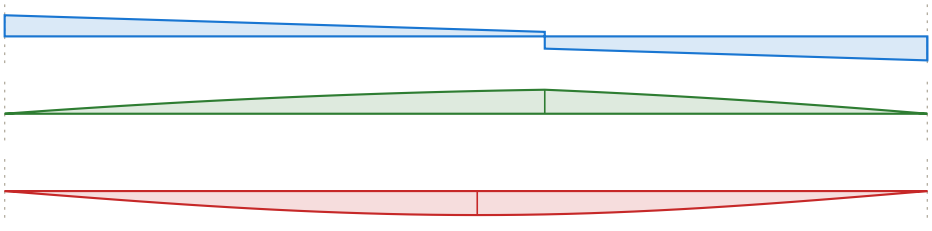

Shear (lbs)
D+S
max -19,005 @ 10' 3"

Moment (ft-lbs)
D+S
max 60,968 @ 6'

Deflection (in)
D+S
0.304 in down @ 5' 3"
limit 0.683 in on the span

Header #32

PASSED

(1) 4x8 DF-L No. 2 (3 1/2" x 7 1/4")

Controls: Moment 80% used

Level: Headers - 1st Level | Member type: Header (Roof Beam) | Length: 4' 6" | 2018 IRC | 2018 NDS | ASD

Section adequacy 20.1% (capacity to spare)

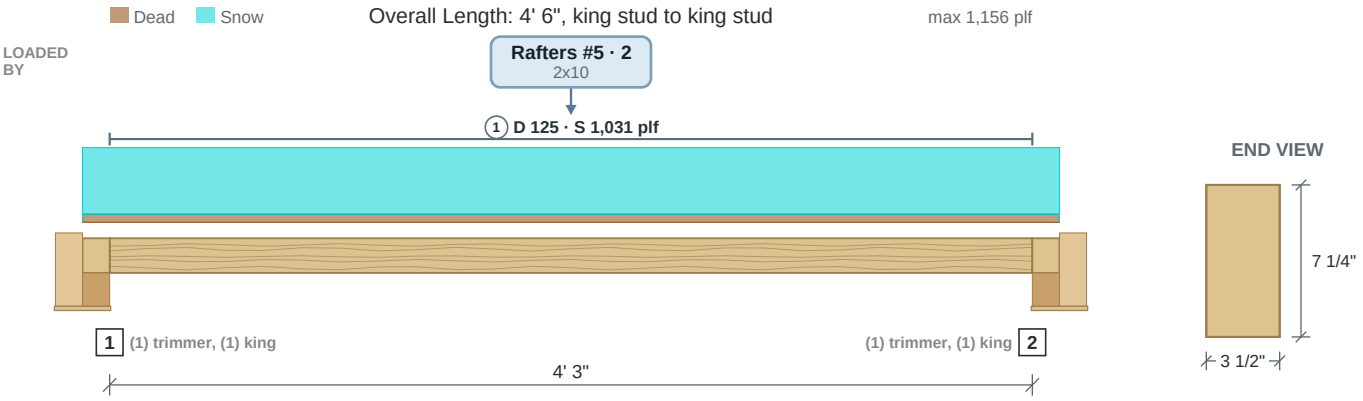

Drawing is conceptual. Locations are measured from the left end of the member; all dimensions are horizontal.

Design Results	Actual @ Location	Allowed	Result	LDF	Load Combination
Member Reaction (lbs)	2,470 @ 0	3,281 (1 1/2")	Passed (75% used)	--	
Shear (lbs)	1,768 @ 3' 7 3/4"	3,502	Passed (50% used)	1.15	D+S
Moment (Ft-lbs)	2,747 @ 2' 1 1/2"	3,438	Passed (80% used)	1.15	D+S
Live Load Defl. (in)	0.047 @ 2' 1 1/2"	0.217	Passed (2L/1,118)	--	S
Total Load Defl. (in)	0.053 @ 2' 1 1/2"	0.29	Passed (2L/992)	--	D+S

- Deflection criteria (IRC Table R301.7): floor live alone L/360; roof live or snow alone L/240; dead plus live L/180.
- Bending adjustment factors: CD = 1.15, CF = 1.30, CL = 1.00 (D+S).
- Beam stability: each moment checked against the bracing of its compression edge (CL = 1.00 where braced).
- Member self weight of 5.8 plf is included.
- Calculations per NDS 2018, ASD, every load combination with its own load duration factor.

	Bearing Length		Loads to Supports (lbs)			
Supports	**Provided**	**Required**	**Dead**	**Snow**	**Total**	**Load goes to**
1 @ 0	1 1/2"	1 1/8"	295	2,320	**2,615**	Bearing wall (marked, trimmers) -- on (1) trimmer, (1) king stud
2 @ 4' 3"	1 1/2"	1 1/8"	295	2,320	**2,615**	Bearing wall (marked, trimmers) -- on (1) trimmer, (1) king stud

Total = the governing ASD combination at that support; the category columns are service loads.

Lateral Bracing	Bracing Intervals	Comments
Top Edge (Lu)	continuous	braced by the sheathing
Bottom Edge (Lu)	4' 3" o/c	used for C_L only where the bottom edge is in compression

Vertical Loads	Location	Trib. Width	Dead (0.90)	Snow (1.15)	Comments
0 - Self Weight (PLF)	0 to 4' 3"	N/A	5.8	--	
1 - Uniform (PLF)	0 to 4' 3"	N/A	125.2	1,031	Linked from: Rafters #5, Support 2

Shear, Moment and Deflection

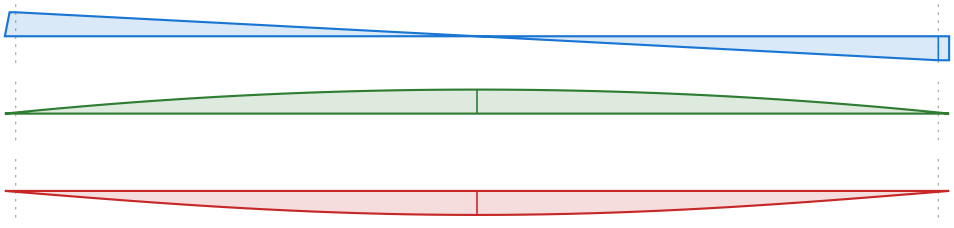

Shear (lbs)
D+S
max -2,470 @ 4' 3"

Moment (ft-lbs)
D+S
max 2,747 @ 2' 1 1/2"

Deflection (in)
D+S
0.053 in down @ 2' 1 1/2"
limit 0.29 in on 2L (cantilever)

Header #33

(2) 1 3/4" x 9 1/4" 2.0E Microlam LVL (Weyerhaeuser)

Level: Headers - 1st Level | Member type: Header (Roof Beam) | Length: 8' 9" | 2018 IRC | 2018 NDS | ASD

PASSED

Controls: Moment 91% used
Section adequacy 9.4% (capacity to spare)

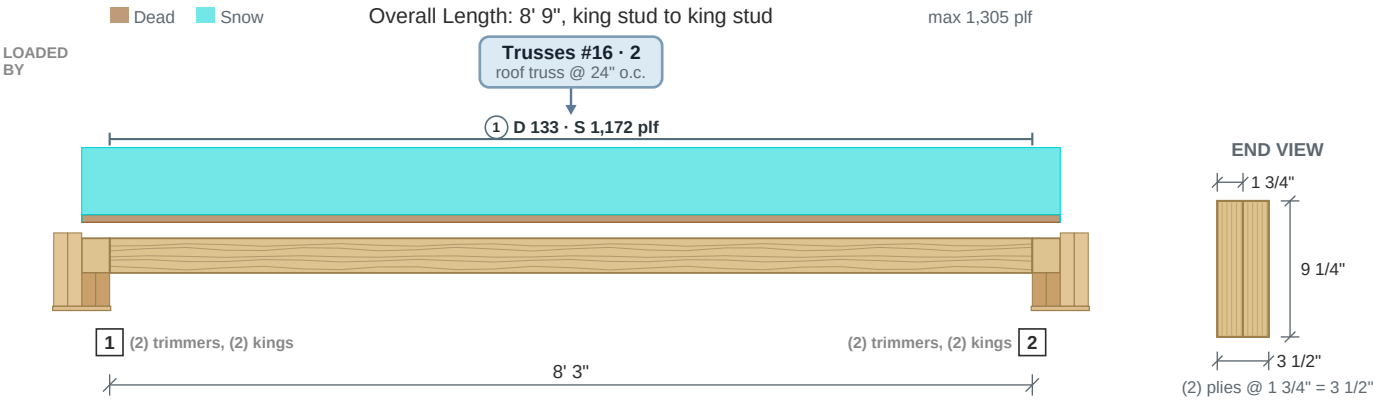

Drawing is conceptual. Locations are measured from the left end of the member; all dimensions are horizontal.

Design Results	Actual @ Location	Allowed	Result	LDF	Load Combination
Member Reaction (lbs)	5,421 @ 0	7,875 (3")	Passed (69% used)	--	
Shear (lbs)	4,408 @ 7' 5 3/4"	7,075	Passed (62% used)	1.15	D+S
Moment (Ft-lbs)	11,675 @ 4' 1 1/2"	12,884	Passed (91% used)	1.15	D+S
Live Load Defl. (in)	0.326 @ 4' 1 1/2"	0.422	Passed (2L/311)	--	S
Total Load Defl. (in)	0.365 @ 4' 1 1/2"	0.562	Passed (2L/277)	--	D+S

- Deflection criteria (IRC Table R301.7): floor live alone L/360; roof live or snow alone L/240; dead plus live L/180.
- Bending adjustment factors: CD = 1.15, CV = 1.036, CL = 1.00 (D+S).
- Beam stability: each moment checked against the bracing of its compression edge (CL = 1.00 where braced).
- Member self weight of 9.4 plf is included.
- Calculations per NDS 2018 and Weyerhaeuser ICC-ES ESR-1387, ASD, every load combination with its own load duration factor.

	Bearing Length		Loads to Supports (lbs)			
Supports	Provided	Required	Dead	Snow	Total	Load goes to
1 @ 0	3"	2 1/16"	622	5,127	**5,749**	Bearing wall (marked, trimmers) -- on (2) trimmers, (2) king studs
2 @ 8' 3"	3"	2 1/16"	622	5,127	**5,749**	Bearing wall (marked, trimmers) -- on (2) trimmers, (2) king studs

Total = the governing ASD combination at that support; the category columns are service loads.

Lateral Bracing	Bracing Intervals	Comments
Top Edge (Lu)	continuous	braced by the sheathing
Bottom Edge (Lu)	8' 3" o/c	used for C_L only where the bottom edge is in compression

Vertical Loads	Location	Trib. Width	Dead (0.90)	Snow (1.15)	Comments
0 - Self Weight (PLF)	0 to 8' 3"	N/A	9.4	--	
1 - Uniform (PLF)	0 to 8' 3"	N/A	132.8	1,172	Linked from: Trusses #16, Support 2

Shear, Moment and Deflection

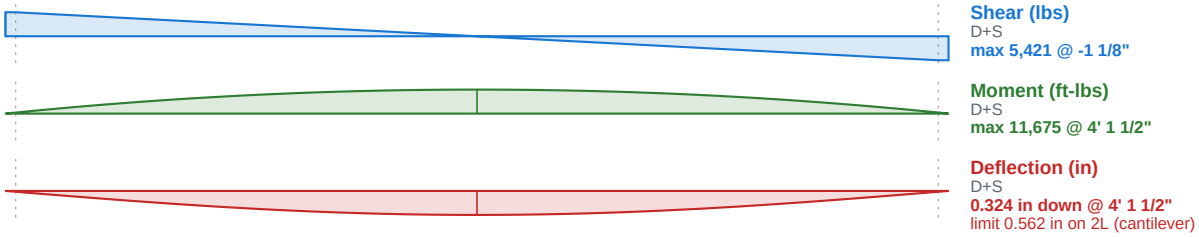

Shear (lbs)
D+S
max 5,421 @ -1 1/8"

Moment (ft-lbs)
D+S
max 11,675 @ 4' 1 1/2"

Deflection (in)
D+S
0.324 in down @ 4' 1 1/2"
limit 0.562 in on 2L (cantilever)

Header #34

(1) 6x8 DF-L No. 2 (5 1/2" x 7 1/2")

Level: Headers - 1st Level | Member type: Header (Roof Beam) | Length: 3' 3" | 2018 IRC | 2018 NDS | ASD

PASSED

Controls: Moment 85% used
Section adequacy 14.9% (capacity to spare)

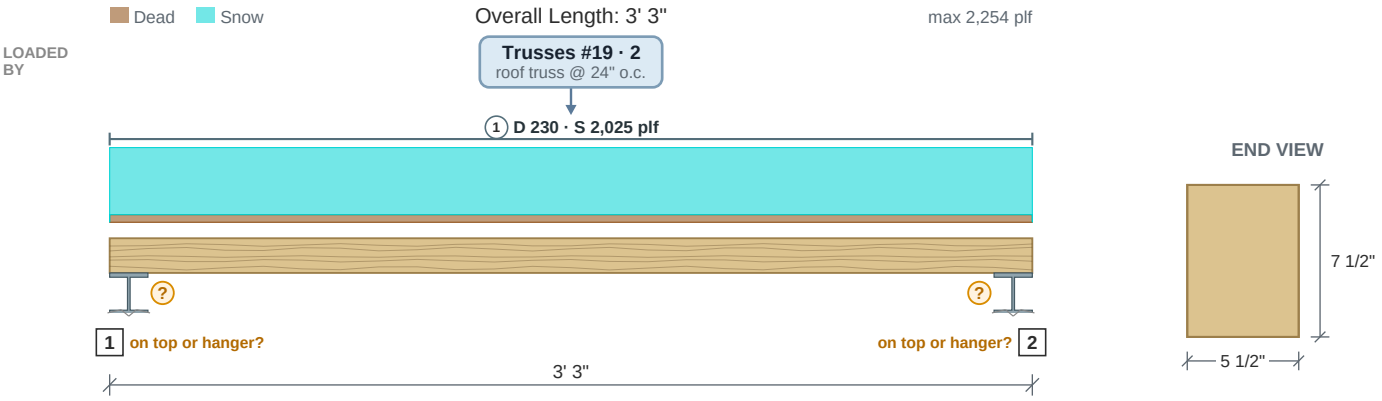

Drawing is conceptual. Locations are measured from the left end of the member; all dimensions are horizontal.

Design Results	Actual @ Location	Allowed	Result	LDF	Load Combination
Member Reaction (lbs)	3,679 @ 0	28,462 (8 1/4")	Passed (13% used)	--	
Shear (lbs)	3,679 @ 3' 3"	5,376	Passed (68% used)	1.15	D+S
Moment (Ft-lbs)	3,153 @ 1' 7 1/2"	3,706	Passed (85% used)	1.15	D+S
Live Load Defl. (in)	0.022 @ 1' 7"	0.167	Passed (2L/1,781)	--	S
Total Load Defl. (in)	0.025 @ 1' 7"	0.223	Passed (2L/1,593)	--	D+S

- Deflection criteria (IRC Table R301.7): floor live alone L/360; roof live or snow alone L/240; dead plus live L/180.
- Bending adjustment factors: CD = 1.15, CL = 1.00 (D+S).
- Beam stability: each moment checked against the bracing of its compression edge (CL = 1.00 where braced).
- Member self weight of 9.4 plf is included.
- Calculations per NDS 2018, ASD, every load combination with its own load duration factor.

	Bearing Length		Loads to Supports (lbs)			
Supports	**Provided**	**Required**	**Dead**	**Snow**	**Total**	**Load goes to**
1 @ 0	8 1/4"	1 1/16"	388	3,291	**3,679**	Header #36 (on top or in a hanger? not set)
2 @ 3' 3"	8 1/4"	1 1/16"	388	3,291	**3,679**	Header #36 (on top or in a hanger? not set)

Total = the governing ASD combination at that support; the category columns are service loads.

Lateral Bracing	Bracing Intervals	Comments
Top Edge (Lu)	continuous	braced by the sheathing
Bottom Edge (Lu)	3' 3" o/c	used for C_L only where the bottom edge is in compression

Vertical Loads	Location	Trib. Width	Dead (0.90)	Snow (1.15)	Comments
0 - Self Weight (PLF)	0 to 3' 3"	N/A	9.4	--	
1 - Uniform (PLF)	0 to 3' 3"	N/A	229.5	2,025	Linked from: Trusses #19, Support 2

Shear, Moment and Deflection

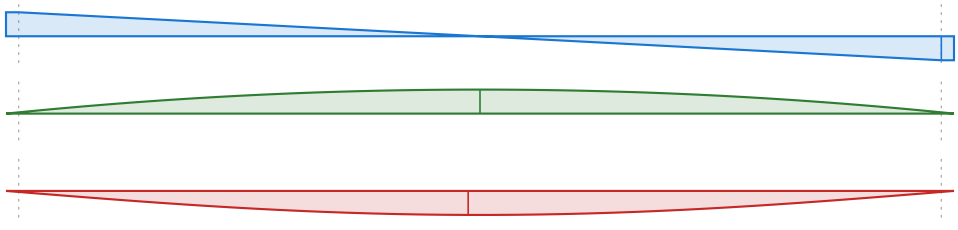

Shear (lbs)
D+S
max -3,679 @ 3' 3"

Moment (ft-lbs)
D+S
max 3,153 @ 1' 7 1/2"

Deflection (in)
D+S
0.025 in down @ 1' 7"
limit 0.223 in on 2L (cantilever)

Header #35

(1) 6x8 DF-L No. 2 (5 1/2" x 7 1/2")

Level: Headers - 1st Level | Member type: Header (Roof Beam) | Length: 3' 3" | 2018 IRC | 2018 NDS | ASD

PASSED

Controls: Moment 85% used
Section adequacy 14.9% (capacity to spare)

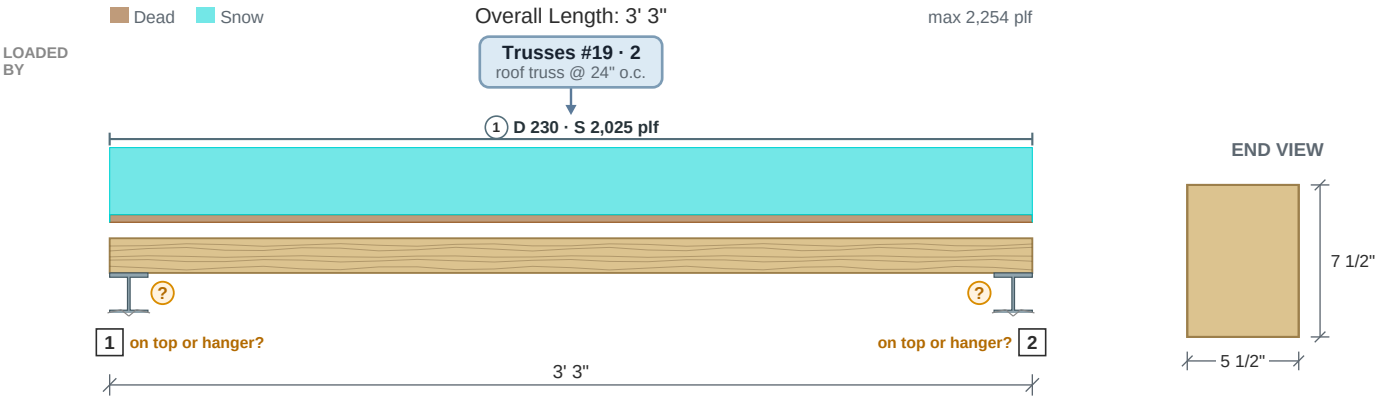

Drawing is conceptual. Locations are measured from the left end of the member; all dimensions are horizontal.

Design Results	Actual @ Location	Allowed	Result	LDF	Load Combination
Member Reaction (lbs)	3,679 @ 0	28,462 (8 1/4")	Passed (13% used)	--	
Shear (lbs)	3,679 @ 3' 3"	5,376	Passed (68% used)	1.15	D+S
Moment (Ft-lbs)	3,153 @ 1' 7 1/2"	3,706	Passed (85% used)	1.15	D+S
Live Load Defl. (in)	0.022 @ 1' 7"	0.167	Passed (2L/1,781)	--	S
Total Load Defl. (in)	0.025 @ 1' 7"	0.223	Passed (2L/1,593)	--	D+S

- Deflection criteria (IRC Table R301.7): floor live alone L/360; roof live or snow alone L/240; dead plus live L/180.
- Bending adjustment factors: CD = 1.15, CL = 1.00 (D+S).
- Beam stability: each moment checked against the bracing of its compression edge (CL = 1.00 where braced).
- Member self weight of 9.4 plf is included.
- Calculations per NDS 2018, ASD, every load combination with its own load duration factor.

	Bearing Length		Loads to Supports (lbs)			
Supports	**Provided**	**Required**	**Dead**	**Snow**	**Total**	**Load goes to**
1 @ 0	8 1/4"	1 1/16"	388	3,291	**3,679**	Header #36 (on top or in a hanger? not set)
2 @ 3' 3"	8 1/4"	1 1/16"	388	3,291	**3,679**	Header #36 (on top or in a hanger? not set)

Total = the governing ASD combination at that support; the category columns are service loads.

Lateral Bracing	Bracing Intervals	Comments
Top Edge (Lu)	continuous	braced by the sheathing
Bottom Edge (Lu)	3' 3" o/c	used for C_L only where the bottom edge is in compression

Vertical Loads	Location	Trib. Width	Dead (0.90)	Snow (1.15)	Comments
0 - Self Weight (PLF)	0 to 3' 3"	N/A	9.4	--	
1 - Uniform (PLF)	0 to 3' 3"	N/A	229.5	2,025	Linked from: Trusses #19, Support 2

Shear, Moment and Deflection

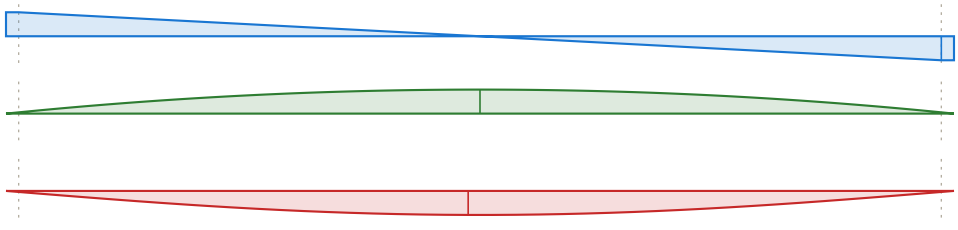

Shear (lbs)
D+S
max -3,679 @ 3' 3"

Moment (ft-lbs)
D+S
max 3,153 @ 1' 7 1/2"

Deflection (in)
D+S
0.025 in down @ 1' 7"
limit 0.223 in on 2L (cantilever)

Header #36

PASSED

W8x67 (ASTM A992, Fy 50 ksi)

Controls: Moment 87% used

Level: Headers - 1st Level | Member type: Header (Roof Beam) | Length: 18' | 2018 IRC | 2018 NDS | ASD

Section adequacy 12.6% (capacity to spare)

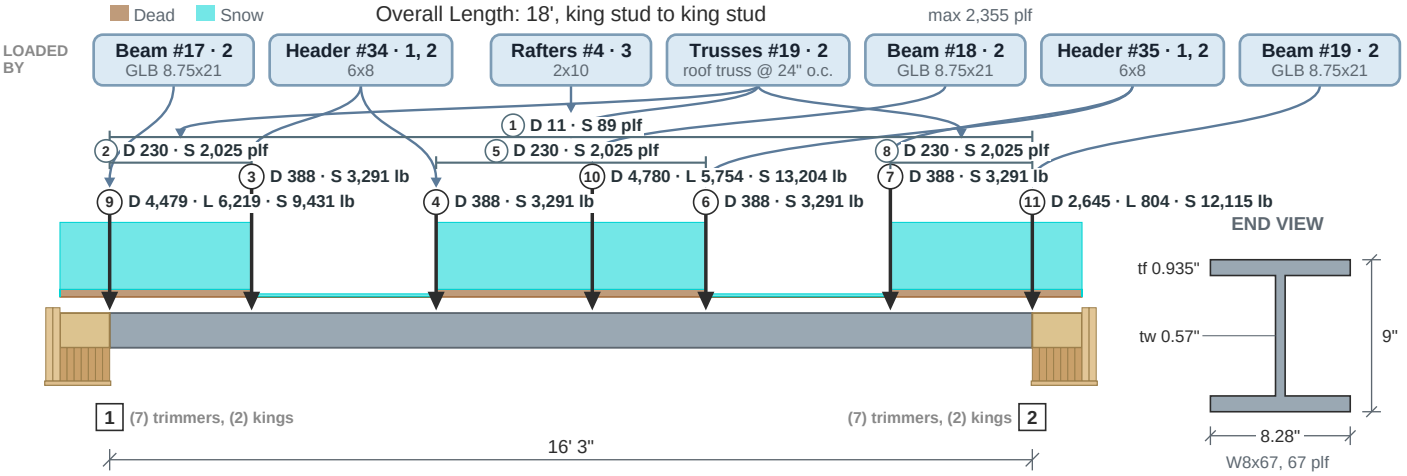

Drawing is conceptual. Locations are measured from the left end of the member; all dimensions are horizontal.

Design Results	Actual @ Location	Allowed	Result	LDF	Load Combination
Shear (lbs)	29,115 @ 16' 3"	102,600	Passed (28% used)	--	D+S
Moment (Ft-lbs)	152,799 @ 8' 6"	174,900	Passed (87% used)	--	D+S
Live Load Defl. (in)	0.673 @ 8' 1 5/16"	0.812	Passed (L/290)	--	S
Total Load Defl. (in)	0.828 @ 8' 1 5/16"	1.083	Passed (L/236)	--	D+S

- Deflection criteria (IRC Table R301.7): floor live alone L/360; roof live or snow alone L/240; dead plus live L/180.
- Member self weight of 67 plf is included.
- Point loads within 2 in of a bearing go straight into that support: they are in its reaction and bearing check, not in shear or moment.
- Calculations per AISC 360-16, ASD, every load combination with its own allowables.

	Bearing Length		Loads to Supports (lbs)				
Supports	**Provided**	**Required**	**Dead**	**Floor Live**	**Snow**	**Total**	**Load goes to**
1 @ 0	10 1/2"	--	9,556	8,963	34,759	**44,315**	SpotFtg Hdr #36-1 (on (7) trimmers, (2) king studs)
2 @ 16' 3"	10 1/2"	--	7,942	3,814	38,052	**45,995**	SpotFtg Hdr #36-2 (on (7) trimmers, (2) king studs)

Total = the governing ASD combination at that support; the category columns are service loads.

Lateral Bracing	Bracing Intervals	Comments
Top Edge (Lu)	continuous	braced by the sheathing
Bottom Edge (Lu)	16' 3" o/c	used for C_L only where the bottom edge is in compression

Vertical Loads	Location	Trib. Width	Dead (0.90)	Floor Live (1.00)	Snow (1.15)	Comments
0 - Self Weight (PLF)	0 to 16' 3"	N/A	67	--	--	
1 - Uniform (PLF)	0 to 16' 3"	N/A	10.9	--	89.5	Linked from: Rafters #4, Support 3
2 - Uniform (PLF)	0 to 2' 6"	N/A	229.5	--	2,025	Linked from: Trusses #19, Support 2
3 - Point (lb)	2' 6"	N/A	388.2	--	3,291	Linked from: Header #34, Support 1
4 - Point (lb)	5' 9"	N/A	388.2	--	3,291	Linked from: Header #34, Support 2
5 - Uniform (PLF)	5' 9" to 10' 6"	N/A	229.5	--	2,025	Linked from: Trusses #19, Support 2
6 - Point (lb)	10' 6"	N/A	388.2	--	3,291	Linked from: Header #35, Support 1
7 - Point (lb)	13' 9"	N/A	388.2	--	3,291	Linked from: Header #35, Support 2
8 - Uniform (PLF)	13' 9" to 16' 3"	N/A	229.5	--	2,025	Linked from: Trusses #19, Support 2
9 - Point (lb)	0	N/A	4,479	6,219	9,431	Linked from: Beam #17, Support 2
10 - Point (lb)	8' 6"	N/A	4,780	5,754	13,204	Linked from: Beam #18, Support 2
11 - Point (lb)	16' 3"	N/A	2,645	803.8	12,115	Linked from: Beam #19, Support 2

Header #36 (continued)

Roof Beam | W8x67 (ASTM A992, Fy 50 ksi)

Shear, Moment and Deflection

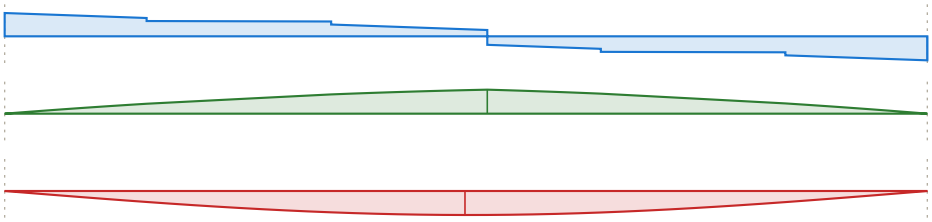

Shear (lbs)
D+S
max -29,115 @ 16' 3"

Moment (ft-lbs)
D+S
max 152,799 @ 8' 6"

Deflection (in)
D+S
0.828 in down @ 8' 1 5/16"
limit 1.083 in on the span

Header #37

(1) 4x10 DF-L No. 2 (3 1/2" x 9 1/4")

Level: Headers - 1st Level | Member type: Header (Roof Beam) | Length: 3' 9" | 2018 IRC | 2018 NDS | ASD

PASSED

Controls: Moment 92% used
Section adequacy 8.2% (capacity to spare)

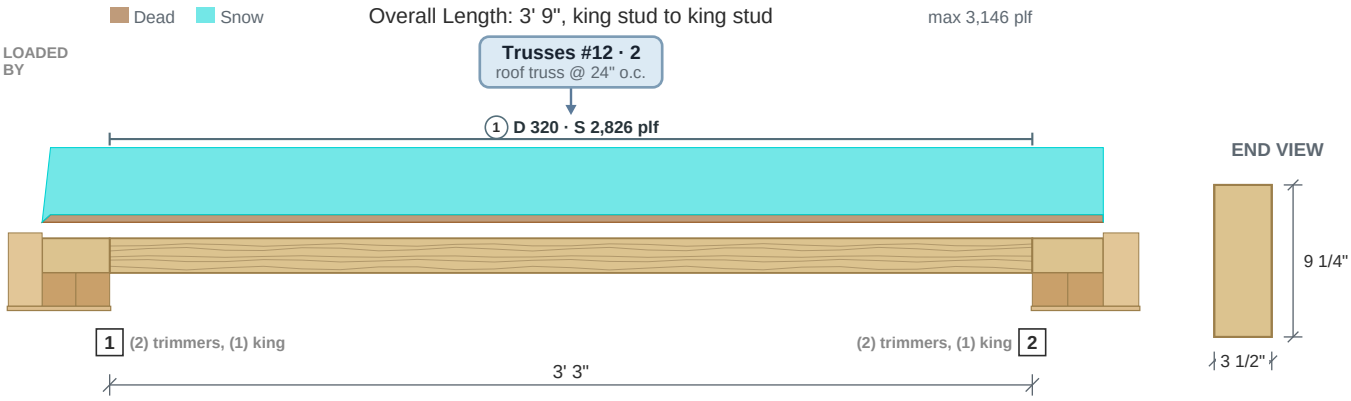

Drawing is conceptual. Locations are measured from the left end of the member; all dimensions are horizontal.

Design Results	Actual @ Location	Allowed	Result	LDF	Load Combination
Member Reaction (lbs)	5,124 @ 0	6,562 (3")	Passed (78% used)	--	
Shear (lbs)	2,694 @ 9 1/4"	4,468	Passed (60% used)	1.15	D+S
Moment (Ft-lbs)	4,741 @ 1' 7 1/2"	5,166	Passed (92% used)	1.15	D+S
Live Load Defl. (in)	0.025 @ 1' 7 1/2"	0.174	Passed (2L/1,669)	--	S
Total Load Defl. (in)	0.028 @ 1' 7 1/2"	0.232	Passed (2L/1,496)	--	D+S

- Deflection criteria (IRC Table R301.7): floor live alone L/360; roof live or snow alone L/240; dead plus live L/180.
- Bending adjustment factors: CD = 1.15, CF = 1.20, CL = 1.00 (D+S).
- Beam stability: each moment checked against the bracing of its compression edge (CL = 1.00 where braced).
- Member self weight of 7.4 plf is included.
- Calculations per NDS 2018, ASD, every load combination with its own load duration factor.

	Bearing Length		Loads to Supports (lbs)			
Supports	**Provided**	**Required**	**Dead**	**Snow**	**Total**	**Load goes to**
1 @ 0	3"	2 5/16"	614	5,299	**5,913**	SpotFtg Hdr #37-1 (on (2) trimmers, (1) king stud)
2 @ 3' 3"	3"	2 5/16"	614	5,299	**5,913**	SpotFtg Hdr #37-2 (on (2) trimmers, (1) king stud)

Total = the governing ASD combination at that support; the category columns are service loads.

Lateral Bracing	Bracing Intervals	Comments
Top Edge (Lu)	continuous	braced by the sheathing
Bottom Edge (Lu)	3' 3" o/c	used for C_L only where the bottom edge is in compression

Vertical Loads	Location	Trib. Width	Dead (0.90)	Snow (1.15)	Comments
0 - Self Weight (PLF)	0 to 3' 3"	N/A	7.4	--	
1 - Uniform (PLF)	0 to 3' 3"	N/A	320.3	2,826	Linked from: Trusses #12, Support 2

Shear, Moment and Deflection

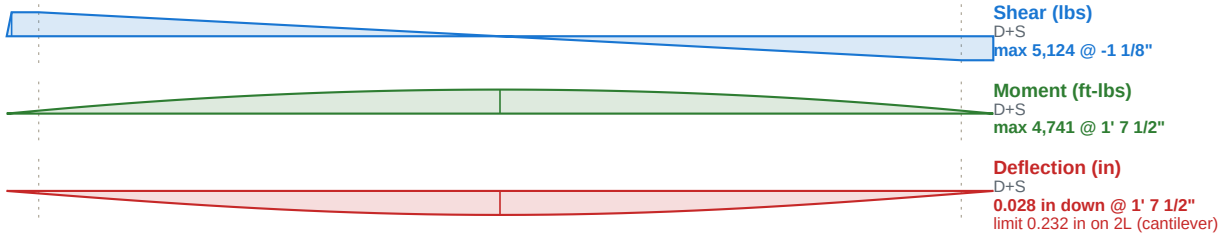

Header #39

PASSED

(1) 4x8 DF-L No. 2 (3 1/2" x 7 1/4")

Level: Headers - 1st Level | Member type: Header (Roof Beam) | Length: 3' 6" | 2018 IRC | 2018 NDS | ASD

Controls: Bearing 34% used
Section adequacy 66.4% (capacity to spare)

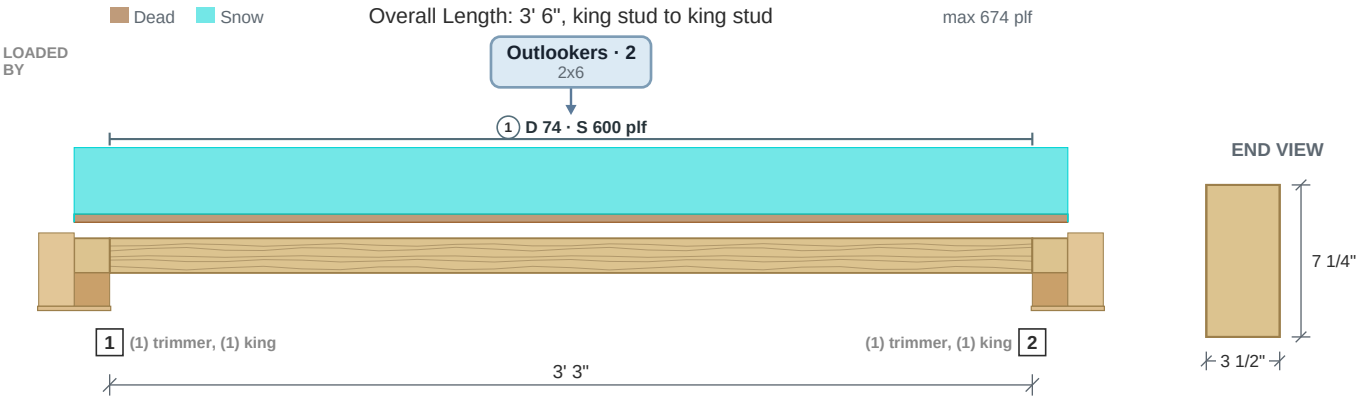

Drawing is conceptual. Locations are measured from the left end of the member; all dimensions are horizontal.

Design Results	Actual @ Location	Allowed	Result	LDF	Load Combination
Member Reaction (lbs)	1,104 @ 0	3,281 (1 1/2")	Passed (34% used)	--	
Shear (lbs)	694 @ 7 1/4"	3,502	Passed (20% used)	1.15	D+S
Moment (Ft-lbs)	922 @ 1' 7 1/2"	3,438	Passed (27% used)	1.15	D+S
Live Load Defl. (in)	0.009 @ 1' 7 1/2"	0.165	Passed (2L/4,419)	--	S
Total Load Defl. (in)	0.01 @ 1' 7 1/2"	0.22	Passed (2L/3,902)	--	D+S

- Deflection criteria (IRC Table R301.7): floor live alone L/360; roof live or snow alone L/240; dead plus live L/180.
- Bending adjustment factors: CD = 1.15, CF = 1.30, CL = 1.00 (D+S).
- Beam stability: each moment checked against the bracing of its compression edge (CL = 1.00 where braced).
- Member self weight of 5.8 plf is included.
- Calculations per NDS 2018, ASD, every load combination with its own load duration factor.

	Bearing Length		Loads to Supports (lbs)			
Supports	**Provided**	**Required**	**Dead**	**Snow**	**Total**	**Load goes to**
1 @ 0	1 1/2"	1/2"	139	1,050	**1,189**	Bearing wall (marked, trimmers) -- on (1) trimmer, (1) king stud
2 @ 3' 3"	1 1/2"	1/2"	139	1,050	**1,189**	Bearing wall (marked, trimmers) -- on (1) trimmer, (1) king stud

Total = the governing ASD combination at that support; the category columns are service loads.

Lateral Bracing	Bracing Intervals	Comments
Top Edge (Lu)	continuous	braced by the sheathing
Bottom Edge (Lu)	3' 3" o/c	used for C_L only where the bottom edge is in compression

Vertical Loads	Location	Trib. Width	Dead (0.90)	Snow (1.15)	Comments
0 - Self Weight (PLF)	0 to 3' 3"	N/A	5.8	--	
1 - Uniform (PLF)	0 to 3' 3"	N/A	73.6	600	Linked from: Outlookers, Support 2

Shear, Moment and Deflection

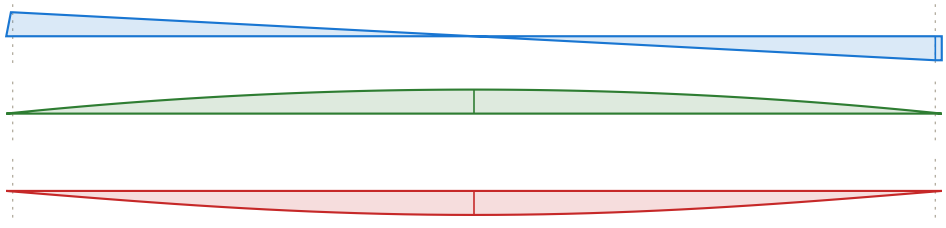

Shear (lbs)
D+S
max -1,104 @ 3' 3"

Moment (ft-lbs)
D+S
max 922 @ 1' 7 1/2"

Deflection (in)
D+S
0.01 in down @ 1' 7 1/2"
limit 0.22 in on 2L (cantilever)

Rafters #1

PASSED

(1) 2x10 SP No. 2 (1 1/2" x 9 1/4") @ 24" o.c.

Controls: Moment 65% used

Level: Roof | Member type: Rafter (Roof Rafter) | Length: 7' 6" | 2018 IRC | 2018 NDS | ASD

Section adequacy 35.1% (capacity to spare)

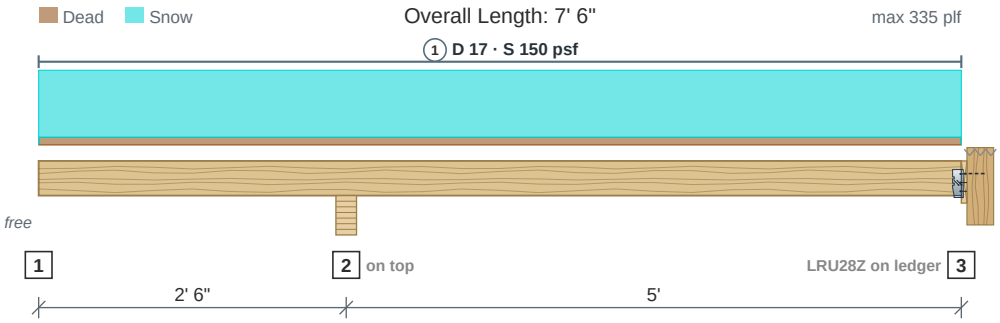

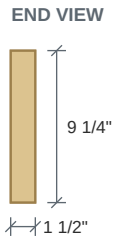

Drawing is conceptual. Locations are measured from the left end of the member; all dimensions are horizontal.

Design Results	Actual @ Location	Allowed	Result	LDF	Load Combination
Member Reaction (lbs)	634 @ 7' 6"	1,642 (1 15/16")	Passed (39% used)	--	
Shear (lbs)	719 @ 3' 6"	1,861	Passed (39% used)	1.15	D+S
Neg Moment (Ft-lbs)	-1,057 @ 2' 6"	1,629	Passed (65% used)	1.15	D+S
Live Load Defl. (in)	0.018 @ 0	0.25	Passed (2L/3,272)	--	S
Total Load Defl. (in)	0.021 @ 0	0.333	Passed (2L/2,911)	--	D+S

- Deflection criteria (IRC Table R301.7): floor live alone L/360; roof live or snow alone L/240; dead plus live L/180.
- Overhang deflection criteria: LL (2L/360) and TL (2L/180) -- a cantilever is limited on twice its length.
- Bending adjustment factors: CD = 1.15, Cr = 1.15, CL = 0.864 (D+S).
- Beam stability (NDS 3.3.3) governs bending: negative moment 1057 lbf-ft, 2.50-7.50 ft, CL 0.864 (unbraced 5.0 ft).
- Member self weight of 3.2 plf is included.
- Calculations per NDS 2018, ASD, every load combination with its own load duration factor.

	Bearing Length		Loads to Supports (lbs)			
Supports	**Provided**	**Required**	**Dead**	**Snow**	**Total**	**Load goes to**
1 @ 0	--	--	--	--	--	free end (cantilever tip)
2 @ 2' 6"	5 1/2"	1 7/8"	210	1,693	**1,903**	Beam #3 (bears on top)
3 @ 7' 6"	1 15/16" seat	3/4"	70	564	**634**	Header #7, Footing #12 (hung on the 2x12 DF-L No. 2 ledger, in an LRU28Z SLD5 rafter hanger, sloped 4.8° down in the field, 25%)

Total = the governing ASD combination at that support; the category columns are service loads.
Ledger at support 3 (LEDGER Rafters #1-3): the 2x12 DF-L No. 2 ledger on 2x6 DF-L studs at 16 in., 1/2" sheathing between: (3) 1/2 x 4-1/2 lags at each stud (16 in. o.c.), from 2" below the ledger's top; 25% to spare at D+S (NDS 12.3, across the gap per AWC TR12; 11.3).

Lateral Bracing	Bracing Intervals	Comments
Top Edge (Lu)	continuous	braced by the sheathing
Bottom Edge (Lu)	5' o/c	governs C_L here: the bottom edge is in compression

Vertical Loads	Location	Trib. Width	Dead (0.90)	Snow (1.15)	Comments
0 - Self Weight (PLF)	0 to 7' 6"	N/A	3.2	--	
1 - Uniform (PSF)	0 to 7' 6"	24"	17	150	

Shear, Moment and Deflection

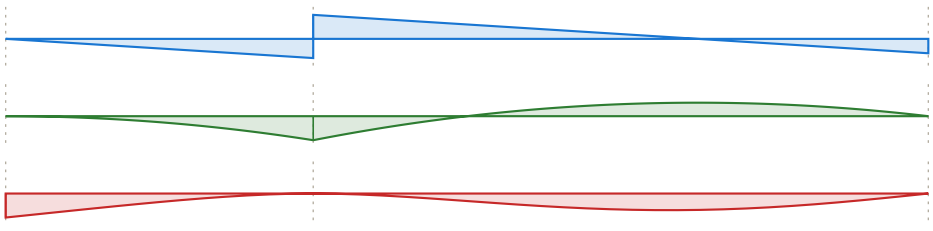

Shear (lbs)
D+S
max 1,057 @ 2' 6"

Moment (ft-lbs)
D+S
max -1,057 @ 2' 6"

Deflection (in)
D+S
0.021 in down @ 0
limit 0.333 in on 2L (cantilever)

Rafters #2

PASSED

(1) 2x12 SP No. 2 (1 1/2" x 11 1/4") @ 24" o.c.

Level: Roof | Member type: Rafter (Roof Rafter) | Length: 8' | 2018 IRC | 2018 NDS | ASD

Controls: Moment 43% used
Section adequacy 56.9% (capacity to spare)

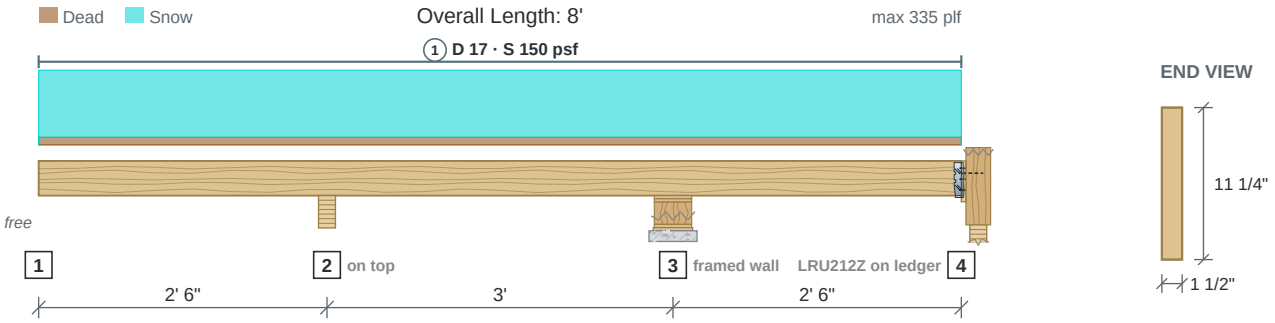

Drawing is conceptual. Locations are measured from the left end of the member; all dimensions are horizontal.

Design Results	Actual @ Location	Allowed	Result	LDF	Load Combination
Member Reaction (lbs)	1,696 @ 2' 6"	4,979 (5 1/2")	Passed (34% used)	--	
Shear (lbs)	453 @ 3' 8"	2,264	Passed (20% used)	1.15	D+S
Neg Moment (Ft-lbs)	-1,059 @ 2' 6"	2,456	Passed (43% used)	1.15	D+S
Live Load Defl. (in)	0.021 @ 0	0.25	Passed (2L/2,866)	--	S
Total Load Defl. (in)	0.024 @ 0	0.333	Passed (2L/2,545)	--	D+S

- Deflection criteria (IRC Table R301.7): floor live alone L/360; roof live or snow alone L/240; dead plus live L/180.
- Overhang deflection criteria: LL (2L/360) and TL (2L/180) -- a cantilever is limited on twice its length.
- Bending adjustment factors: CD = 1.15, Cr = 1.15, CL = 0.939 (D+S).
- Beam stability (NDS 3.3.3) governs bending: negative moment 1059 lbf-ft, 2.50-5.50 ft, CL 0.939 (unbraced 3.0 ft).
- Member self weight of 3.8 plf is included.
- Calculations per NDS 2018, ASD, every load combination with its own load duration factor.

	Bearing Length		Loads to Supports (lbs)			
Supports	**Provided**	**Required**	**Dead**	**Snow**	**Total**	**Load goes to**
1 @ 0	--	--	--	--	--	free end (cantilever tip)
2 @ 2' 6"	5 1/2"	1 5/8"	190	1,506	**1,696**	Beam #4 (bears on top)
3 @ 5' 6"	5 1/2"	5/16"	68	540	**608**	Header #11, Footing #18 (a framed wall down to the foundation)
4 @ 8'	1 15/16" seat	1/2"	46	362	**408**	Beam #2 (hung on the 2x14 HF No. 2 ledger on a stud wall standing on it, in an LRU212Z SLD5 rafter hanger, sloped 4.8° down in the field, 59%)

Total = the governing ASD combination at that support; the category columns are service loads.
Ledger at support 4 (LEDGER Rafters #2-4): the 2x14 HF No. 2 ledger on 2x6 DF-L studs at 16 in., 1/2" sheathing between: (2) 1/2 x 4-1/2 lags at each stud (16 in. o.c.), from 2" below the ledger's top; 19% to spare at D+S (NDS 12.3, across the gap per AWC TR12; 11.3).

Lateral Bracing	Bracing Intervals	Comments
Top Edge (Lu)	continuous	braced by the sheathing
Bottom Edge (Lu)	3' o/c	governs C_L here: the bottom edge is in compression

Vertical Loads	Location	Trib. Width	Dead (0.90)	Snow (1.15)	Comments
0 - Self Weight (PLF)	0 to 8'	N/A	3.8	--	
1 - Uniform (PSF)	0 to 8'	24"	17	150	

Shear, Moment and Deflection

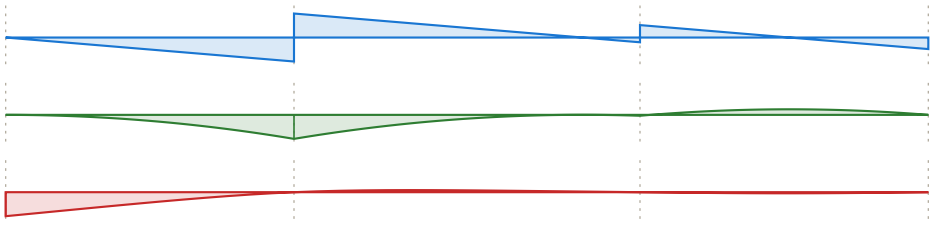

Shear (lbs)
D+S
max 848 @ 2' 6"

Moment (ft-lbs)
D+S
max -1,059 @ 2' 6"

Deflection (in)
D+S
0.024 in down @ 0
limit 0.333 in on 2L (cantilever)

Rafters #3

PASSED

(1) 2x10 DF-L No. 2 (1 1/2" x 9 1/4") @ 24" o.c.

Controls: Moment 65% used

Level: Roof | Member type: Rafter (Roof Rafter) | Length: 10' 6" | 2018 IRC | 2018 NDS | ASD

Section adequacy 34.9% (capacity to spare)

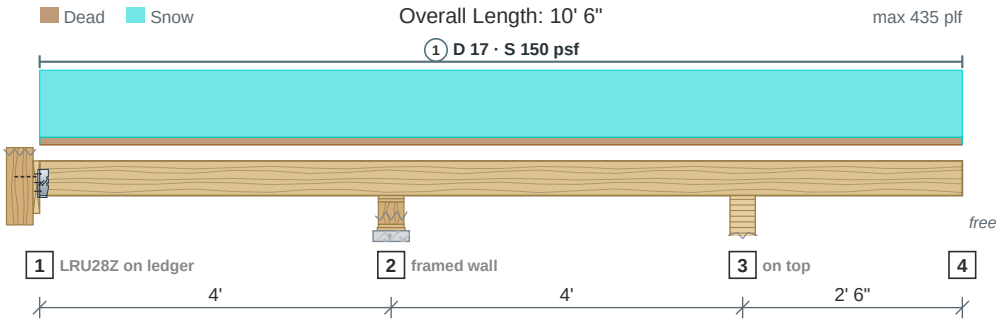

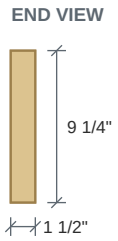

Drawing is conceptual. Locations are measured from the left end of the member; all dimensions are horizontal.

Design Results	Actual @ Location	Allowed	Result	LDF	Load Combination
Member Reaction (lbs)	1,676 @ 4'	3,633 (3 1/2")	Passed (46% used)	--	
Shear (lbs)	742 @ 0	1,915	Passed (39% used)	1.15	D+S
Neg Moment (Ft-lbs)	-1,368 @ 8'	2,101	Passed (65% used)	1.15	D+S
Live Load Defl. (in)	0.045 @ 10' 6"	0.25	Passed (2L/1,320)	--	S
Total Load Defl. (in)	0.051 @ 10' 6"	0.333	Passed (2L/1,177)	--	D+S

- Deflection criteria (IRC Table R301.7): floor live alone L/360; roof live or snow alone L/240; dead plus live L/180.
- Overhang deflection criteria: LL (2L/360) and TL (2L/180) -- a cantilever is limited on twice its length.
- Bending adjustment factors: CD = 1.15, CF = 1.10, Cr = 1.15, CL = 0.9 (D+S).
- Beam stability (NDS 3.3.3) governs bending: negative moment 1369 lbf-ft, 4.00-8.00 ft, CL 0.900 (unbraced 4.0 ft).
- Member self weight of 3.2 plf is included.
- Calculations per NDS 2018, ASD, every load combination with its own load duration factor.

	Bearing Length		Loads to Supports (lbs)			
Supports	**Provided**	**Required**	**Dead**	**Snow**	**Total**	**Load goes to**
1 @ 0	1 15/16" seat	13/16"	80	662	**742**	not linked (hung on the 1 3/4 x 14 1.55E LSL ledger, in an LRU28Z SLD40 rafter hanger, sloped 39.8° down in the field, 13%)
2 @ 4'	3 1/2"	1 7/16"	182	1,495	**1,676**	Header #28, Header #29, Header #30, Footing #49 (a framed wall down to the foundation)
3 @ 8'	6 3/4"	1 15/16"	236	1,943	**2,179**	Beam #9 (bears on top)
4 @ 10' 6"	--	--	--	--	--	free end (cantilever tip)

Total = the governing ASD combination at that support; the category columns are service loads.
Ledger at support 1 (LEDGER Rafters #3-1): the 1 3/4 x 14 1.55E LSL ledger on 2x6 DF-L studs at 16 in., 1/2" sheathing between: (3) 1/2 x 5 lags at each stud (16 in. o.c.), from 2" below the ledger's top; 25% to spare at D+S (NDS 12.3, across the gap per AWC TR12; 11.3).

Lateral Bracing	Bracing Intervals	Comments
Top Edge (Lu)	continuous	braced by the sheathing
Bottom Edge (Lu)	4' o/c	governs C_L here: the bottom edge is in compression

Vertical Loads	Location	Trib. Width	Dead (0.90)	Snow (1.15)	Comments
0 - Self Weight (PLF)	0 to 10' 6"	N/A	3.2	--	
1 - Uniform (PSF)	0 to 10' 6"	24"	17	150	

Shear, Moment and Deflection

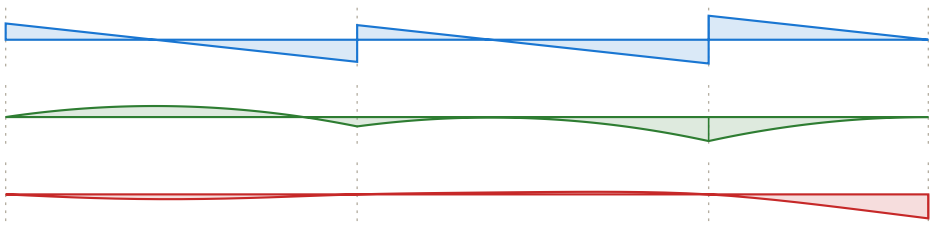

Shear (lbs)
D+S
max 1,095 @ 8'

Moment (ft-lbs)
D+S
max -1,369 @ 8'

Deflection (in)
D+S
0.051 in down @ 10' 6"
limit 0.333 in on 2L (cantilever)

Rafters #4

PASSED

(1) 2x10 SP No. 2 (1 1/2" x 9 1/4") @ 24" o.c.

Controls: Moment 76% used

Level: Roof | Member type: Rafter (Roof Rafter) | Length: 5' 6" | 2018 IRC | 2018 NDS | ASD

Section adequacy 23.8% (capacity to spare)

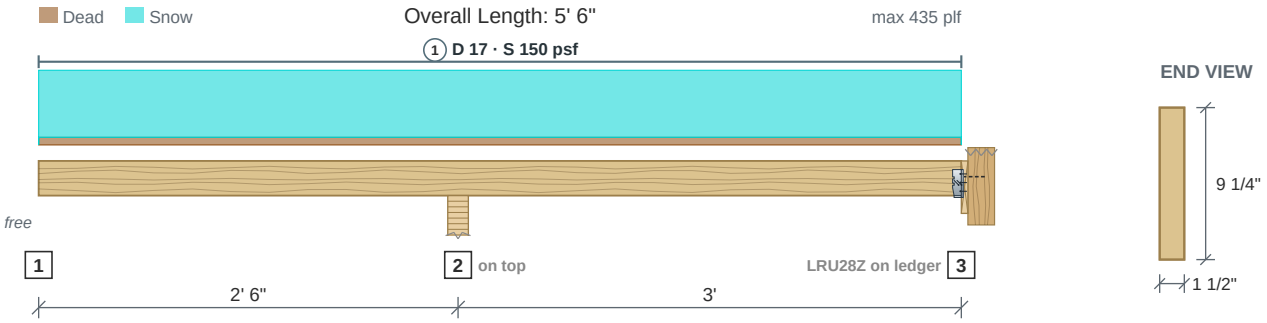

Drawing is conceptual. Locations are measured from the left end of the member; all dimensions are horizontal.

Design Results	Actual @ Location	Allowed	Result	LDF	Load Combination
Member Reaction (lbs)	2,208 @ 2' 6"	3,284 (3 1/2")	Passed (67% used)	--	
Shear (lbs)	712 @ 3' 5"	1,861	Passed (38% used)	1.15	D+S
Neg Moment (Ft-lbs)	-1,368 @ 2' 6"	1,796	Passed (76% used)	1.15	D+S
Live Load Defl. (in)	0.048 @ 0	0.25	Passed (2L/1,246)	--	S
Total Load Defl. (in)	0.054 @ 0	0.333	Passed (2L/1,111)	--	D+S

- Deflection criteria (IRC Table R301.7): floor live alone L/360; roof live or snow alone L/240; dead plus live L/180.
- Overhang deflection criteria: LL (2L/360) and TL (2L/180) -- a cantilever is limited on twice its length.
- Bending adjustment factors: CD = 1.15, Cr = 1.15, CL = 0.952 (D+S).
- Beam stability (NDS 3.3.3) governs bending: negative moment 1369 lbf-ft, 2.50-5.50 ft, CL 0.952 (unbraced 3.0 ft).
- Member self weight of 3.2 plf is included.
- Calculations per NDS 2018, ASD, every load combination with its own load duration factor.

	Bearing Length		Loads to Supports (lbs)			
Supports	**Provided**	**Required**	**Dead**	**Snow**	**Total**	**Load goes to**
1 @ 0	--	--	--	--	--	free end (cantilever tip)
2 @ 2' 6"	3 1/2"	2 1/4"	239	1,969	**2,208**	Beam #12, Beam #14 (bears on top)
3 @ 5' 6"	1 15/16" seat	1/4"	22	179	**201**	Header #36, Footing #48, Footing #50 (hung on the 1 3/4 x 14 1.55E LSL ledger, in an LRU28Z SLD40 rafter hanger, sloped 39.8° down in the field, 76%)

Total = the governing ASD combination at that support; the category columns are service loads.
Ledger at support 3 (LEDGER Rafters #4-3): the 1 3/4 x 14 1.55E LSL ledger on 2x6 DF-L studs at 16 in., 1/2" sheathing between: (2) 1/2 x 5 lags at each stud (16 in. o.c.), from 2" below the ledger's top; 70% to spare at D+S (NDS 12.3, across the gap per AWC TR12; 11.3).

Lateral Bracing	Bracing Intervals	Comments
Top Edge (Lu)	continuous	braced by the sheathing
Bottom Edge (Lu)	3' o/c	governs C_L here: the bottom edge is in compression

Vertical Loads	Location	Trib. Width	Dead (0.90)	Snow (1.15)	Comments
0 - Self Weight (PLF)	0 to 5' 6"	N/A	3.2	--	
1 - Uniform (PSF)	0 to 5' 6"	24"	17	150	

Shear, Moment and Deflection

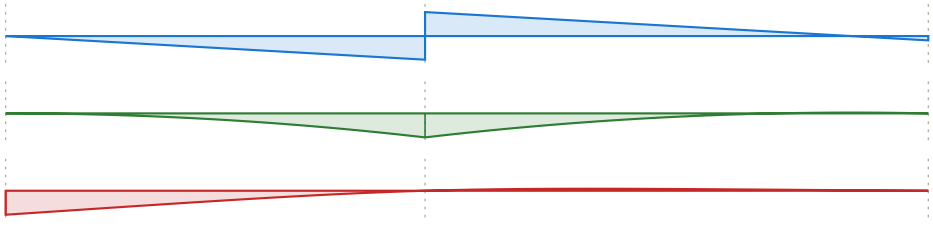

Shear (lbs)
D+S
max 1,113 @ 2' 6"

Moment (ft-lbs)
D+S
max -1,369 @ 2' 6"

Deflection (in)
D+S
0.054 in down @ 0
limit 0.333 in on 2L (cantilever)

Rafters #5

PASSED

(1) 2x10 DF-L No. 2 (1 1/2" x 9 1/4") @ 24" o.c.

Controls: Moment 65% used

Level: Roof | Member type: Rafter (Roof Rafter) | Length: 6' 6" | 2018 IRC | 2018 NDS | ASD

Section adequacy 34.9% (capacity to spare)

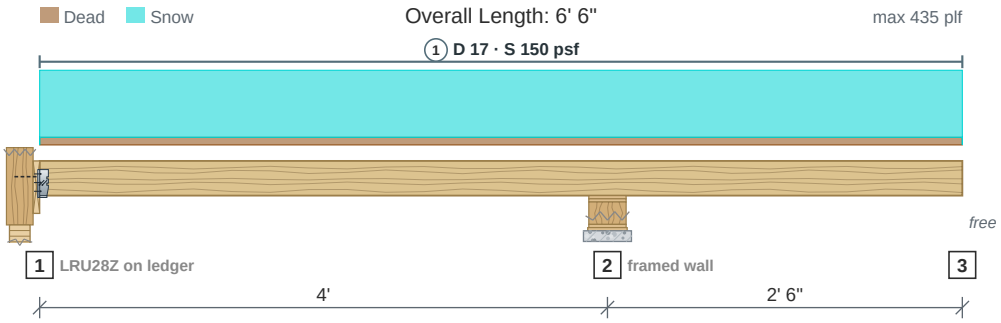

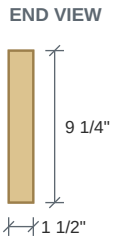

Drawing is conceptual. Locations are measured from the left end of the member; all dimensions are horizontal.

Design Results	Actual @ Location	Allowed	Result	LDF	Load Combination
Member Reaction (lbs)	2,313 @ 4'	3,633 (3 1/2")	Passed (64% used)	--	
Shear (lbs)	817 @ 3' 1"	1,915	Passed (43% used)	1.15	D+S
Neg Moment (Ft-lbs)	-1,368 @ 4'	2,101	Passed (65% used)	1.15	D+S
Live Load Defl. (in)	0.037 @ 6' 6"	0.25	Passed (2L/1,630)	--	S
Total Load Defl. (in)	0.041 @ 6' 6"	0.333	Passed (2L/1,454)	--	D+S

- Deflection criteria (IRC Table R301.7): floor live alone L/360; roof live or snow alone L/240; dead plus live L/180.
- Overhang deflection criteria: LL (2L/360) and TL (2L/180) -- a cantilever is limited on twice its length.
- Bending adjustment factors: CD = 1.15, CF = 1.10, Cr = 1.15, CL = 0.9 (D+S).
- Beam stability (NDS 3.3.3) governs bending: negative moment 1369 lbf-ft, 0.00-4.00 ft, CL 0.900 (unbraced 4.0 ft).
- Member self weight of 3.2 plf is included.
- Calculations per NDS 2018, ASD, every load combination with its own load duration factor.

	Bearing Length		Loads to Supports (lbs)			
Supports	**Provided**	**Required**	**Dead**	**Snow**	**Total**	**Load goes to**
1 @ 0	1 15/16" seat	9/16"	58	476	**534**	Beam #10 (hung on the 1 3/4 x 14 1.55E LSL ledger on a stud wall standing on it, in an LRU28Z SLD40 rafter hanger, sloped 39.8° down in the field, 37%)
2 @ 4'	3 1/2"	2 1/16"	250	2,062	**2,313**	Header #32, Footing #51 (a framed wall down to the foundation)
3 @ 6' 6"	--	--	--	--	--	free end (cantilever tip)

Total = the governing ASD combination at that support; the category columns are service loads.
Ledger at support 1 (LEDGER Rafters #5-1): the 1 3/4 x 14 1.55E LSL ledger on 2x6 DF-L studs at 16 in., 1/2" sheathing between: (2) 1/2 x 5 lags at each stud (16 in. o.c.), from 2" below the ledger's top; 20% to spare at D+S (NDS 12.3, across the gap per AWC TR12; 11.3).

Lateral Bracing	Bracing Intervals	Comments
Top Edge (Lu)	continuous	braced by the sheathing
Bottom Edge (Lu)	4' o/c	governs C_L here: the bottom edge is in compression

Vertical Loads	Location	Trib. Width	Dead (0.90)	Snow (1.15)	Comments
0 - Self Weight (PLF)	0 to 6' 6"	N/A	3.2	--	
1 - Uniform (PSF)	0 to 6' 6"	24"	17	150	

Shear, Moment and Deflection

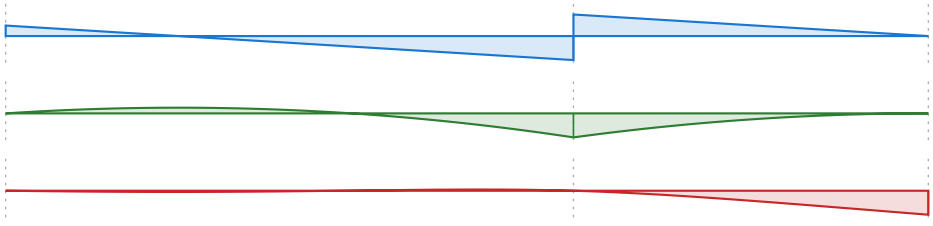

Shear (lbs)
D+S
max -1,218 @ 4'

Moment (ft-lbs)
D+S
max -1,369 @ 4'

Deflection (in)
D+S
0.041 in down @ 6' 6"
limit 0.333 in on 2L (cantilever)

Trusses #1

Roof truss (generic) @ 24" o.c.

Level: Roof | Length: 16' | 2018 IRC | 2018 NDS | ASD

LOADS ONLY

Generic member for linked loads
no member size or design check

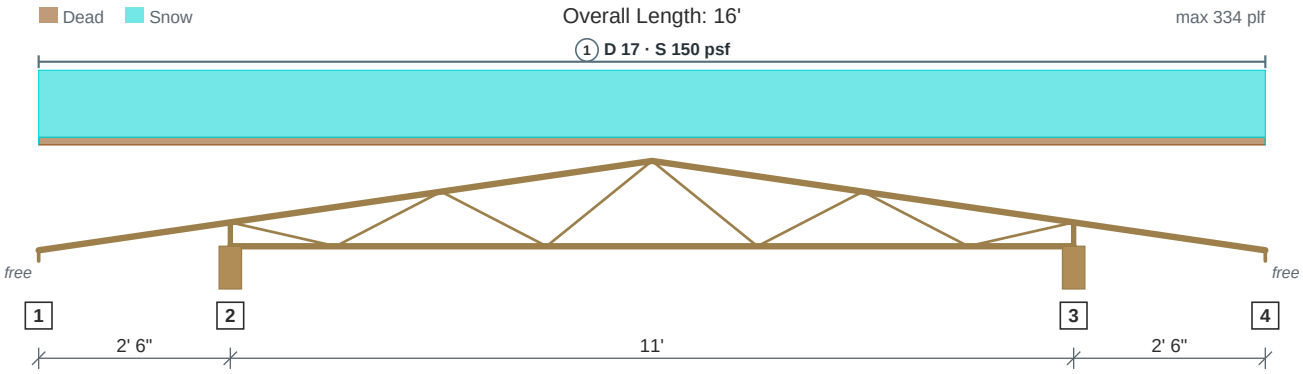

Drawing is conceptual. Locations are measured from the left end of the member; all dimensions are horizontal.

- Generic roof trusses @ 24" o.c., modeled so the loads they carry reach the members and walls that support them as linked loads. The size in the model is a placeholder, so no size or design check is shown; the trusses themselves are designed by the truss manufacturer.

	Loads to Supports (lbs)			
Supports	**Dead**	**Snow**	**Total**	**Load goes to**
1 @ 0	--	--	--	free end (cantilever tip)
2 @ 2' 6"	272	2,400	**2,672**	Header #1, Footing #1 (a framed wall down to the foundation)
3 @ 13' 6"	272	2,400	**2,672**	Footing #2 (a framed wall down to the foundation)
4 @ 16'	--	--	--	free end (cantilever tip)

Total = the governing ASD combination at that support; the category columns are service loads.

Vertical Loads	Location	Trib. Width	Dead (0.90)	Snow (1.15)	Comments
1 - Uniform (PSF)	0 to 16'	24"	17	150	

Trusses #2

Roof truss (generic) @ 24" o.c.

Level: Roof | Length: 22' | 2018 IRC | 2018 NDS | ASD

LOADS ONLY

Generic member for linked loads
no member size or design check

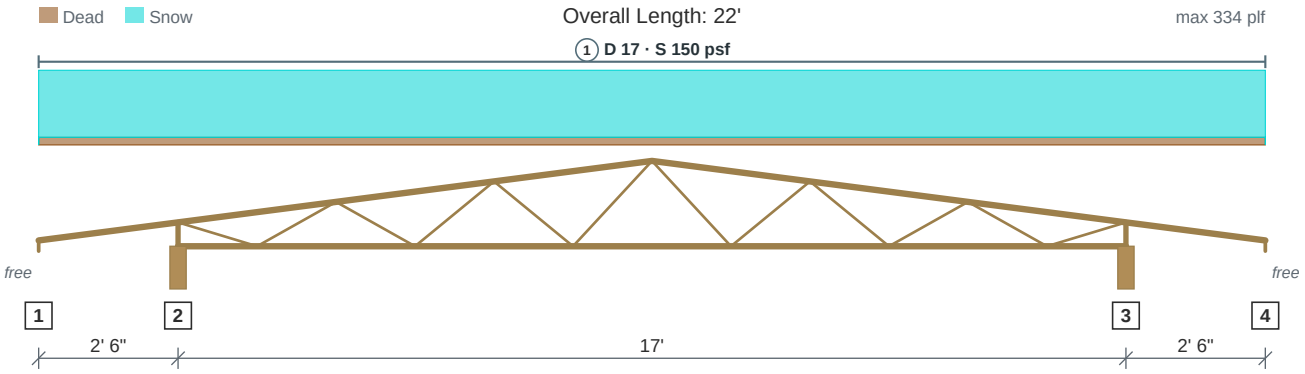

Drawing is conceptual. Locations are measured from the left end of the member; all dimensions are horizontal.

- Generic roof trusses @ 24" o.c., modeled so the loads they carry reach the members and walls that support them as linked loads. The size in the model is a placeholder, so no size or design check is shown; the trusses themselves are designed by the truss manufacturer.

	Loads to Supports (lbs)			
Supports	**Dead**	**Snow**	**Total**	**Load goes to**
1 @ 0	--	--	--	free end (cantilever tip)
2 @ 2' 6"	374	3,300	**3,674**	Header #3, Header #4, Footing #4 (a framed wall down to the foundation)
3 @ 19' 6"	374	3,300	**3,674**	Footing #5 (a framed wall down to the foundation)
4 @ 22'	--	--	--	free end (cantilever tip)

Total = the governing ASD combination at that support; the category columns are service loads.

Vertical Loads	Location	Trib. Width	Dead (0.90)	Snow (1.15)	Comments
1 - Uniform (PSF)	0 to 22'	24"	17	150	

Trusses #3

Roof truss (generic) @ 24" o.c.

Level: Roof | Length: 17' | 2018 IRC | 2018 NDS | ASD

LOADS ONLY

Generic member for linked loads
no member size or design check

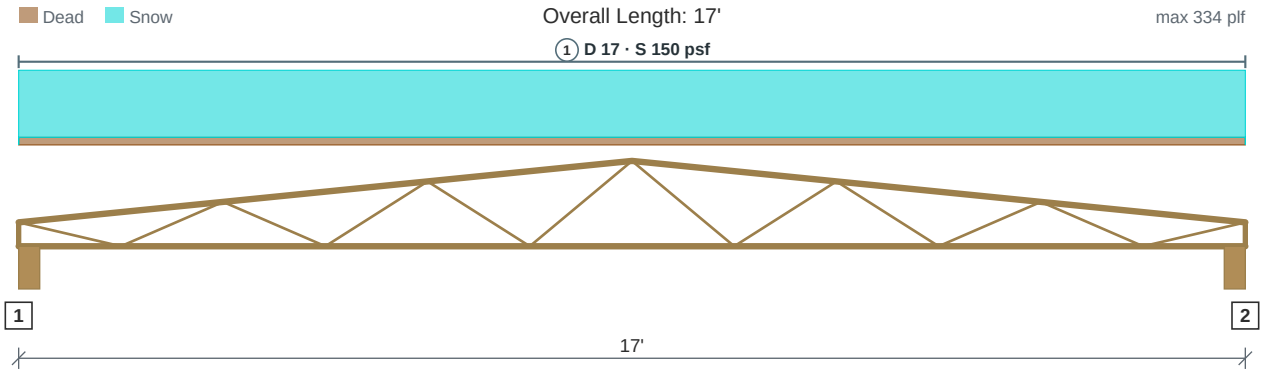

Drawing is conceptual. Locations are measured from the left end of the member; all dimensions are horizontal.

- Generic roof trusses @ 24" o.c., modeled so the loads they carry reach the members and walls that support them as linked loads. The size in the model is a placeholder, so no size or design check is shown; the trusses themselves are designed by the truss manufacturer.

	Loads to Supports (lbs)			
Supports	**Dead**	**Snow**	**Total**	**Load goes to**
1 @ 0	289	2,550	**2,839**	Girder #1, Footing #6 (a framed wall down to the foundation)
2 @ 17'	289	2,550	**2,839**	Beam #21, Footing #7, Beam #24, Beam #25 (a framed wall down to the foundation)

Total = the governing ASD combination at that support; the category columns are service loads.

Vertical Loads	Location	Trib. Width	Dead (0.90)	Snow (1.15)	Comments
1 - Uniform (PSF)	0 to 17'	24"	17	150	

Trusses #4

Roof truss (generic) @ 24" o.c.

Level: Roof | Length: 22' | 2018 IRC | 2018 NDS | ASD

LOADS ONLY

Generic member for linked loads
no member size or design check

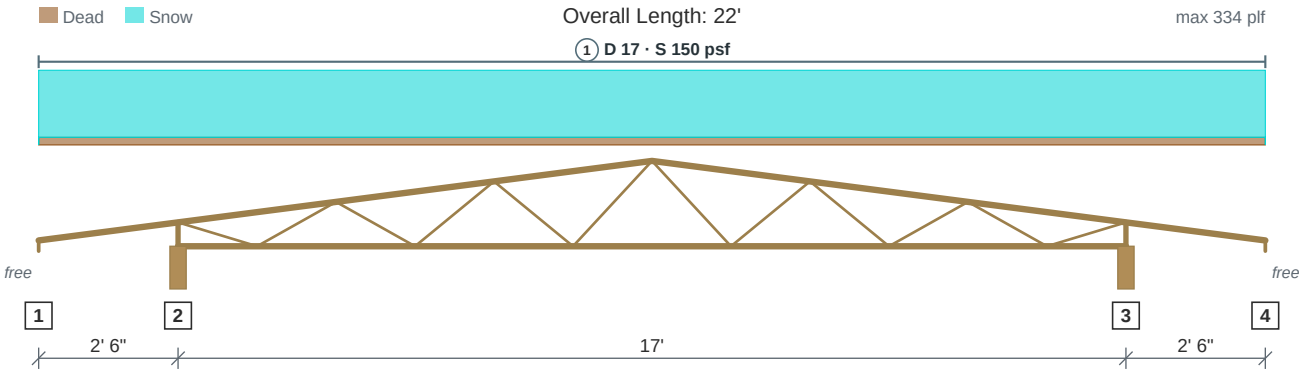

Drawing is conceptual. Locations are measured from the left end of the member; all dimensions are horizontal.

- Generic roof trusses @ 24" o.c., modeled so the loads they carry reach the members and walls that support them as linked loads. The size in the model is a placeholder, so no size or design check is shown; the trusses themselves are designed by the truss manufacturer.

	Loads to Supports (lbs)			
Supports	**Dead**	**Snow**	**Total**	**Load goes to**
1 @ 0	--	--	--	free end (cantilever tip)
2 @ 2' 6"	374	3,300	**3,674**	Footing #8 (a framed wall down to the foundation)
3 @ 19' 6"	374	3,300	**3,674**	not linked
4 @ 22'	--	--	--	free end (cantilever tip)

Total = the governing ASD combination at that support; the category columns are service loads.

Vertical Loads	Location	Trib. Width	Dead (0.90)	Snow (1.15)	Comments
1 - Uniform (PSF)	0 to 22'	24"	17	150	

Trusses #5

Roof truss (generic) @ 24" o.c.

Level: Roof | Length: 18' | 2018 IRC | 2018 NDS | ASD

LOADS ONLY

Generic member for linked loads
no member size or design check

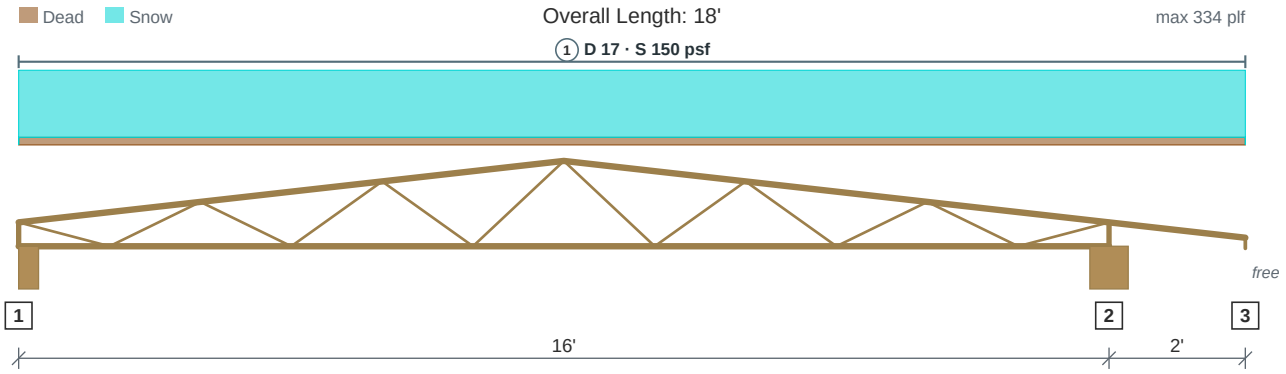

Drawing is conceptual. Locations are measured from the left end of the member; all dimensions are horizontal.

- Generic roof trusses @ 24" o.c., modeled so the loads they carry reach the members and walls that support them as linked loads. The size in the model is a placeholder, so no size or design check is shown; the trusses themselves are designed by the truss manufacturer.

	Loads to Supports (lbs)			
Supports	**Dead**	**Snow**	**Total**	**Load goes to**
1 @ 0	268	2,362	**2,630**	Header #6, Header #8, Footing #11 (a framed wall down to the foundation)
2 @ 16'	344	3,038	**3,382**	Beam #1 (on top or in a hanger? not set)
3 @ 18'	--	--	--	free end (cantilever tip)

Total = the governing ASD combination at that support; the category columns are service loads.

Vertical Loads	Location	Trib. Width	Dead (0.90)	Snow (1.15)	Comments
1 - Uniform (PSF)	0 to 18'	24"	17	150	

Trusses #6

Roof truss (generic) @ 24" o.c.

Level: Roof | Length: 18' 6" | 2018 IRC | 2018 NDS | ASD

LOADS ONLY

Generic member for linked loads
no member size or design check

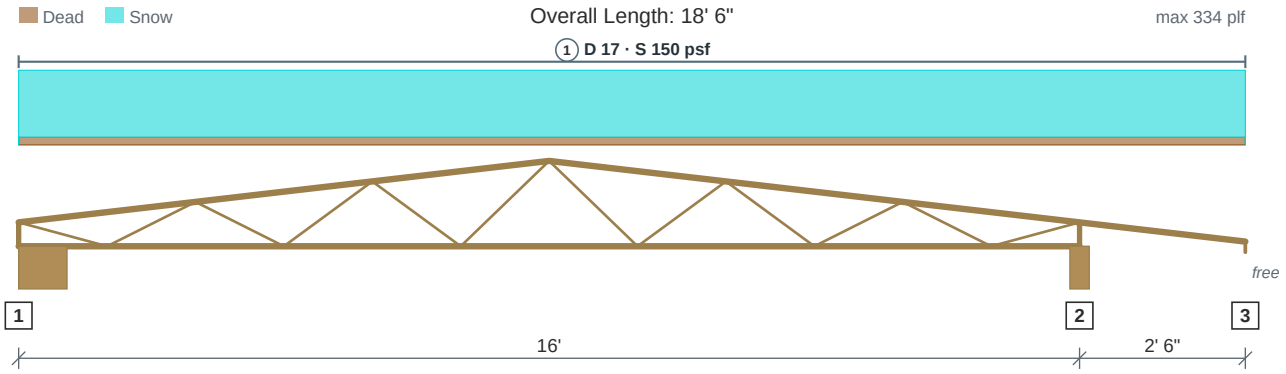

Drawing is conceptual. Locations are measured from the left end of the member; all dimensions are horizontal.

- Generic roof trusses @ 24" o.c., modeled so the loads they carry reach the members and walls that support them as linked loads. The size in the model is a placeholder, so no size or design check is shown; the trusses themselves are designed by the truss manufacturer.

	Loads to Supports (lbs)			
Supports	**Dead**	**Snow**	**Total**	**Load goes to**
1 @ 0	265	2,341	**2,607**	Beam #13 (on top or in a hanger? not set)
2 @ 16'	364	3,209	**3,572**	Header #13, Footing #20 (a framed wall down to the foundation)
3 @ 18' 6"	--	--	--	free end (cantilever tip)

Total = the governing ASD combination at that support; the category columns are service loads.

Vertical Loads	Location	Trib. Width	Dead (0.90)	Snow (1.15)	Comments
1 - Uniform (PSF)	0 to 18' 6"	24"	17	150	

Trusses #7

Roof truss (generic) @ 24" o.c.

Level: Roof | Length: 28' | 2018 IRC | 2018 NDS | ASD

LOADS ONLY

Generic member for linked loads
no member size or design check

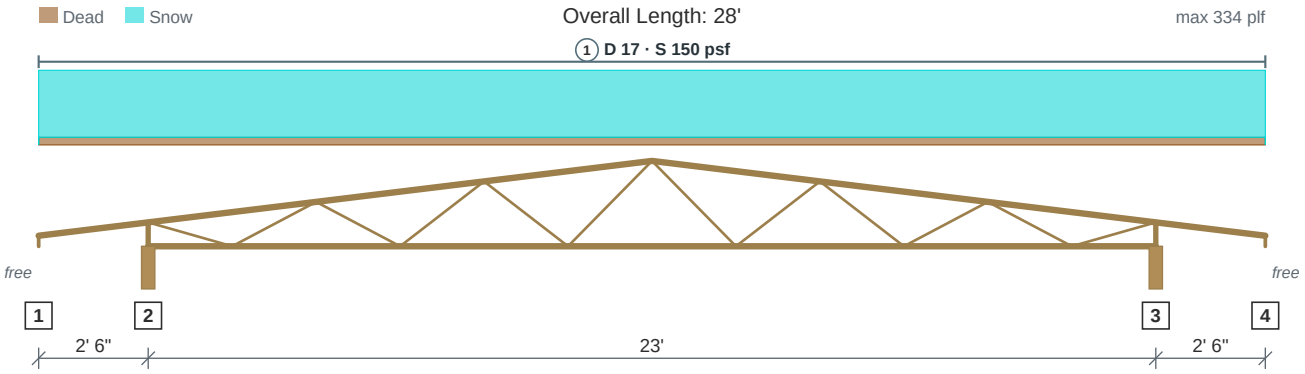

Drawing is conceptual. Locations are measured from the left end of the member; all dimensions are horizontal.

- Generic roof trusses @ 24" o.c., modeled so the loads they carry reach the members and walls that support them as linked loads. The size in the model is a placeholder, so no size or design check is shown; the trusses themselves are designed by the truss manufacturer.

	Loads to Supports (lbs)			
Supports	**Dead**	**Snow**	**Total**	**Load goes to**
1 @ 0	--	--	--	free end (cantilever tip)
2 @ 2' 6"	476	4,200	**4,676**	Header #7, Header #9, Beam #2, Footing #12, Footing #13 (a framed wall down to the foundation)
3 @ 25' 6"	476	4,200	**4,676**	Header #6, Header #8, Beam #13, Footing #11 (a framed wall down to the foundation)
4 @ 28'	--	--	--	free end (cantilever tip)

Total = the governing ASD combination at that support; the category columns are service loads.

Vertical Loads	Location	Trib. Width	Dead (0.90)	Snow (1.15)	Comments
1 - Uniform (PSF)	0 to 28'	24"	17	150	

Trusses #8

Roof truss (generic) @ 24" o.c.

Level: Roof | Length: 16' 6" | 2018 IRC | 2018 NDS | ASD

LOADS ONLY

Generic member for linked loads
no member size or design check

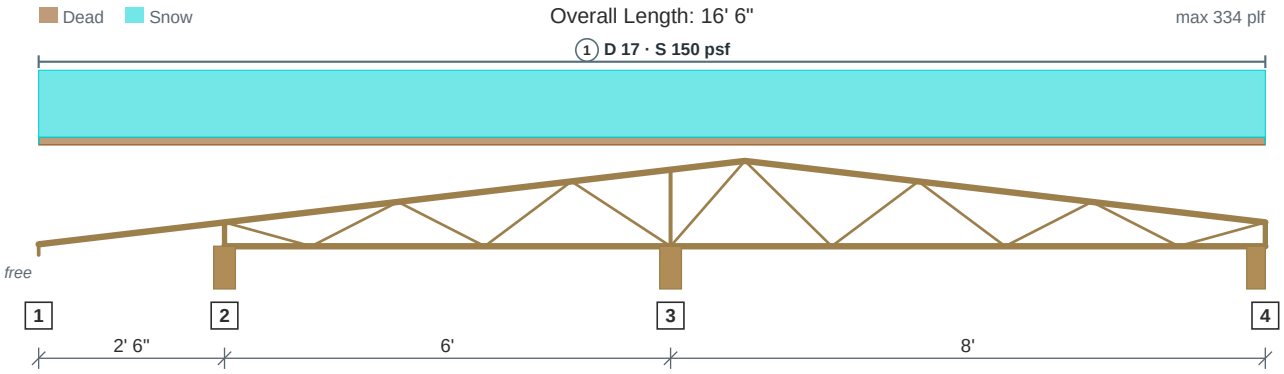

Drawing is conceptual. Locations are measured from the left end of the member; all dimensions are horizontal.

- Generic roof trusses @ 24" o.c., modeled so the loads they carry reach the members and walls that support them as linked loads. The size in the model is a placeholder, so no size or design check is shown; the trusses themselves are designed by the truss manufacturer.

	Loads to Supports (lbs)			
Supports	**Dead**	**Snow**	**Total**	**Load goes to**
1 @ 0	--	--	--	free end (cantilever tip)
2 @ 2' 6"	172	1,515	**1,686**	Beam #5, Footing #17 (a framed wall down to the foundation)
3 @ 8' 6"	278	2,454	**2,732**	Header #10, Footing #14 (a framed wall down to the foundation)
4 @ 16' 6"	111	981	**1,093**	Header #9, Footing #13 (a framed wall down to the foundation)

Total = the governing ASD combination at that support; the category columns are service loads.

Vertical Loads	Location	Trib. Width	Dead (0.90)	Snow (1.15)	Comments
1 - Uniform (PSF)	0 to 16' 6"	24"	17	150	

Trusses #9

Roof truss (generic) @ 24" o.c.

Level: Roof | Length: 33' | 2018 IRC | 2018 NDS | ASD

LOADS ONLY

Generic member for linked loads
no member size or design check

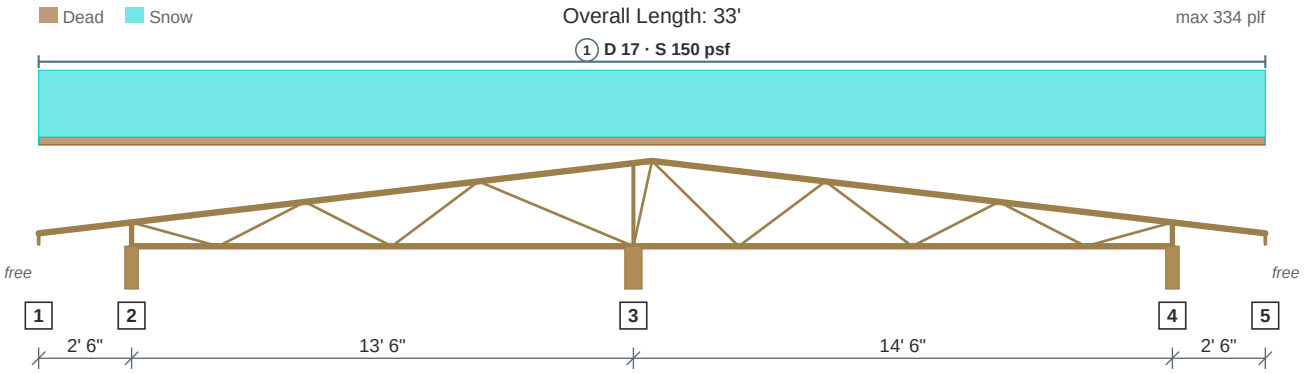

Drawing is conceptual. Locations are measured from the left end of the member; all dimensions are horizontal.

- Generic roof trusses @ 24" o.c., modeled so the loads they carry reach the members and walls that support them as linked loads. The size in the model is a placeholder, so no size or design check is shown; the trusses themselves are designed by the truss manufacturer.

	Loads to Supports (lbs)			
Supports	**Dead**	**Snow**	**Total**	**Load goes to**
1 @ 0	--	--	--	free end (cantilever tip)
2 @ 2' 6"	264	2,333	**2,597**	Footing #25 (a framed wall down to the foundation)
3 @ 16'	573	5,054	**5,627**	not linked
4 @ 30' 6"	285	2,513	**2,798**	not linked
5 @ 33'	--	--	--	free end (cantilever tip)

Total = the governing ASD combination at that support; the category columns are service loads.

Vertical Loads	Location	Trib. Width	Dead (0.90)	Snow (1.15)	Comments
1 - Uniform (PSF)	0 to 33'	24"	17	150	

Trusses #10

Roof truss (generic) @ 24" o.c.

Level: Roof | Length: 25' 6" | 2018 IRC | 2018 NDS | ASD

LOADS ONLY

Generic member for linked loads
no member size or design check

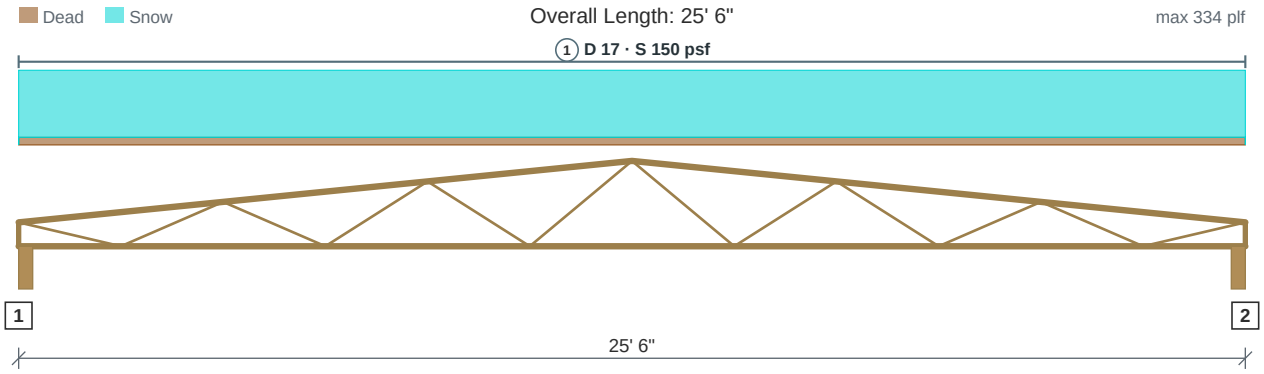

Drawing is conceptual. Locations are measured from the left end of the member; all dimensions are horizontal.

- Generic roof trusses @ 24" o.c., modeled so the loads they carry reach the members and walls that support them as linked loads. The size in the model is a placeholder, so no size or design check is shown; the trusses themselves are designed by the truss manufacturer.

	Loads to Supports (lbs)			
Supports	**Dead**	**Snow**	**Total**	**Load goes to**
1 @ 0	434	3,825	**4,258**	Header #17, Footing #22, Footing #23, Footing #24 (a framed wall down to the foundation)
2 @ 25' 6"	434	3,825	**4,258**	Header #18, Header #19, Footing #26, Footing #27, Footing #28, Beam #29 (a framed wall down to the foundation)

Total = the governing ASD combination at that support; the category columns are service loads.

Vertical Loads	Location	Trib. Width	Dead (0.90)	Snow (1.15)	Comments
1 - Uniform (PSF)	0 to 25' 6"	24"	17	150	

Trusses #11

Roof truss (generic) @ 24" o.c.

Level: Roof | Length: 20' 6" | 2018 IRC | 2018 NDS | ASD

LOADS ONLY

Generic member for linked loads
no member size or design check

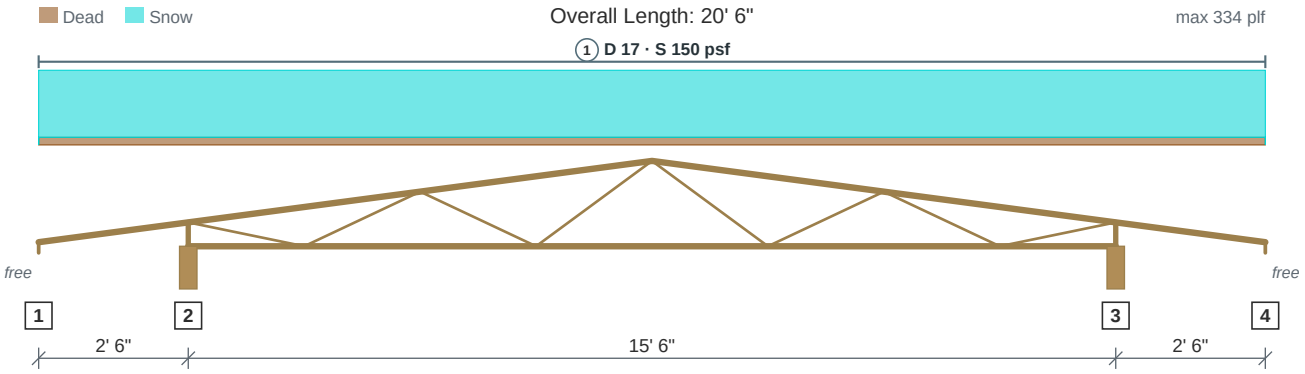

Drawing is conceptual. Locations are measured from the left end of the member; all dimensions are horizontal.

- Generic roof trusses @ 24" o.c., modeled so the loads they carry reach the members and walls that support them as linked loads. The size in the model is a placeholder, so no size or design check is shown; the trusses themselves are designed by the truss manufacturer.

	Loads to Supports (lbs)			
Supports	**Dead**	**Snow**	**Total**	**Load goes to**
1 @ 0	--	--	--	free end (cantilever tip)
2 @ 2' 6"	348	3,075	**3,424**	Footing #32, Footing #33 (a framed wall down to the foundation)
3 @ 18'	348	3,075	**3,424**	Header #20, Footing #31 (a framed wall down to the foundation)
4 @ 20' 6"	--	--	--	free end (cantilever tip)

Total = the governing ASD combination at that support; the category columns are service loads.

Vertical Loads	Location	Trib. Width	Dead (0.90)	Snow (1.15)	Comments
1 - Uniform (PSF)	0 to 20' 6"	24"	17	150	

Trusses #12

Roof truss (generic) @ 24" o.c.

Level: Roof | Length: 32' 6" | 2018 IRC | 2018 NDS | ASD

LOADS ONLY

Generic member for linked loads
no member size or design check

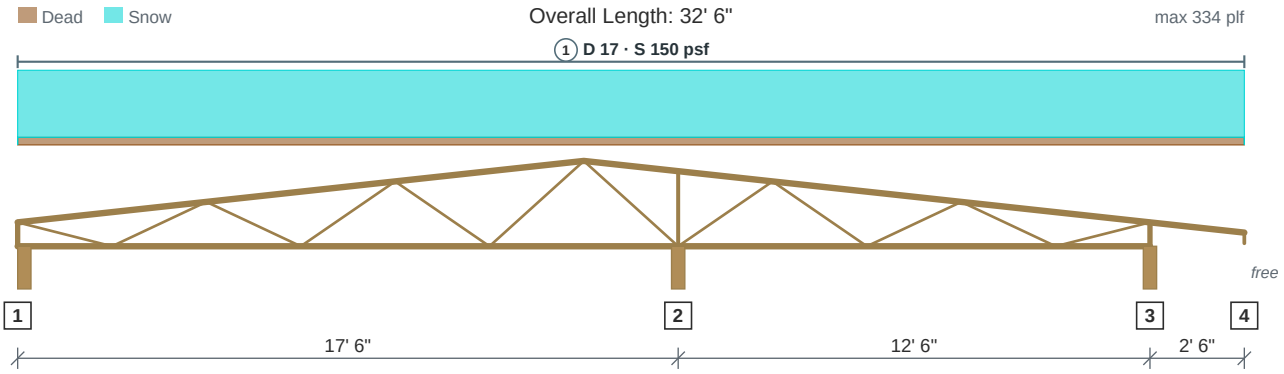

Drawing is conceptual. Locations are measured from the left end of the member; all dimensions are horizontal.

- Generic roof trusses @ 24" o.c., modeled so the loads they carry reach the members and walls that support them as linked loads. The size in the model is a placeholder, so no size or design check is shown; the trusses themselves are designed by the truss manufacturer.

	Loads to Supports (lbs)			
Supports	**Dead**	**Snow**	**Total**	**Load goes to**
1 @ 0	240	2,114	**2,353**	Footing #35, Footing #36, Beam #26, Beam #27 (a framed wall down to the foundation)
2 @ 17' 6"	641	5,652	**6,292**	Header #37, Footing #37, Footing #38, Beam #28 (a framed wall down to the foundation)
3 @ 30'	225	1,984	**2,209**	Header #23, Header #24, Footing #39 (a framed wall down to the foundation)
4 @ 32' 6"	--	--	--	free end (cantilever tip)

Total = the governing ASD combination at that support; the category columns are service loads.

Vertical Loads	Location	Trib. Width	Dead (0.90)	Snow (1.15)	Comments
1 - Uniform (PSF)	0 to 32' 6"	24"	17	150	

Trusses #13

LOADS ONLY

Generic member for linked loads
no member size or design check

Roof truss (generic) @ 24" o.c.

Level: Roof | Length: 25' 6" | 2018 IRC | 2018 NDS | ASD

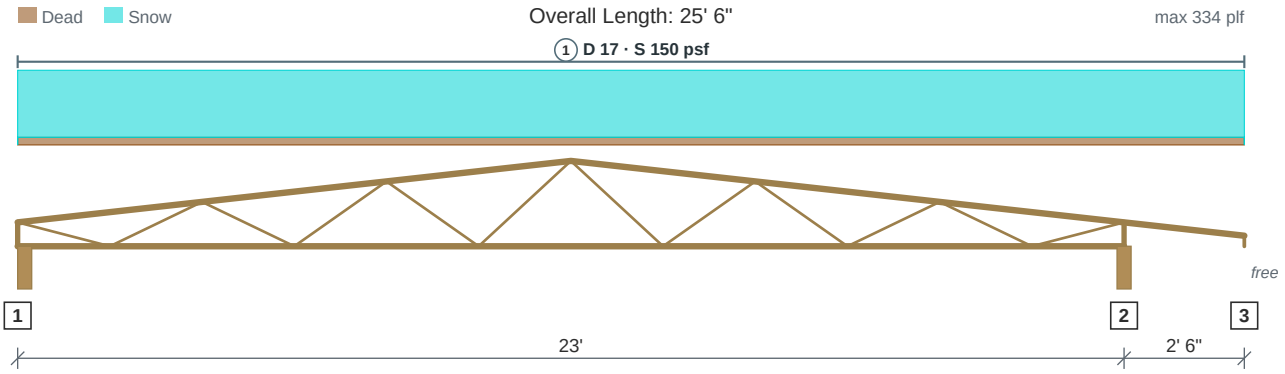

Drawing is conceptual. Locations are measured from the left end of the member; all dimensions are horizontal.

- Generic roof trusses @ 24" o.c., modeled so the loads they carry reach the members and walls that support them as linked loads. The size in the model is a placeholder, so no size or design check is shown; the trusses themselves are designed by the truss manufacturer.

	Loads to Supports (lbs)			
Supports	**Dead**	**Snow**	**Total**	**Load goes to**
1 @ 0	386	3,409	**3,796**	Header #25, Footing #41 (a framed wall down to the foundation)
2 @ 23'	481	4,241	**4,721**	Header #26, Footing #42 (a framed wall down to the foundation)
3 @ 25' 6"	--	--	--	free end (cantilever tip)

Total = the governing ASD combination at that support; the category columns are service loads.

Vertical Loads	Location	Trib. Width	Dead (0.90)	Snow (1.15)	Comments
1 - Uniform (PSF)	0 to 25' 6"	24"	17	150	

Trusses #14

Roof truss (generic) @ 24" o.c.

Level: Roof | Length: 14' 6" | 2018 IRC | 2018 NDS | ASD

LOADS ONLY

Generic member for linked loads
no member size or design check

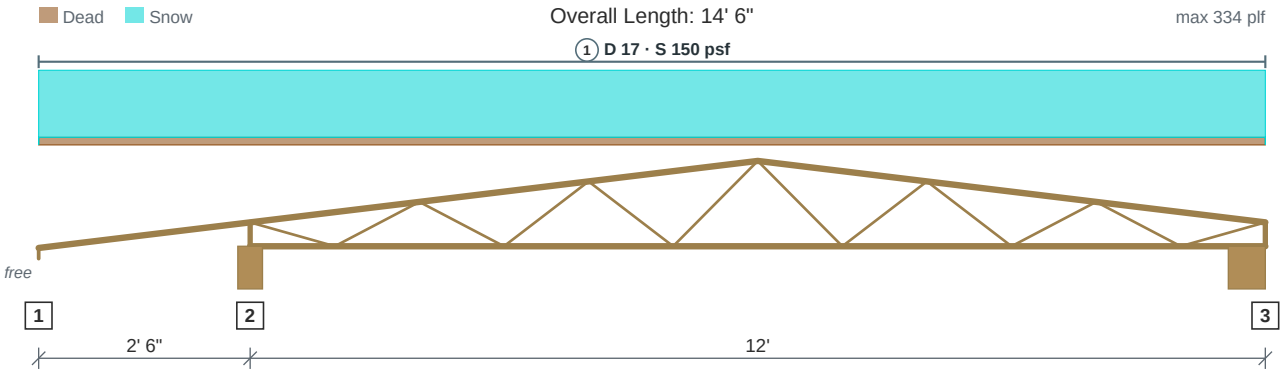

Drawing is conceptual. Locations are measured from the left end of the member; all dimensions are horizontal.

- Generic roof trusses @ 24" o.c., modeled so the loads they carry reach the members and walls that support them as linked loads. The size in the model is a placeholder, so no size or design check is shown; the trusses themselves are designed by the truss manufacturer.

	Loads to Supports (lbs)			
Supports	**Dead**	**Snow**	**Total**	**Load goes to**
1 @ 0	--	--	--	free end (cantilever tip)
2 @ 2' 6"	298	2,628	**2,926**	Footing #44 (a framed wall down to the foundation)
3 @ 14' 6"	195	1,722	**1,917**	Beam #6 (bears on top)

Total = the governing ASD combination at that support; the category columns are service loads.

Vertical Loads	Location	Trib. Width	Dead (0.90)	Snow (1.15)	Comments
1 - Uniform (PSF)	0 to 14' 6"	24"	17	150	

Trusses #15

Roof truss (generic) @ 24" o.c.

Level: Roof | Length: 26' | 2018 IRC | 2018 NDS | ASD

LOADS ONLY

Generic member for linked loads
no member size or design check

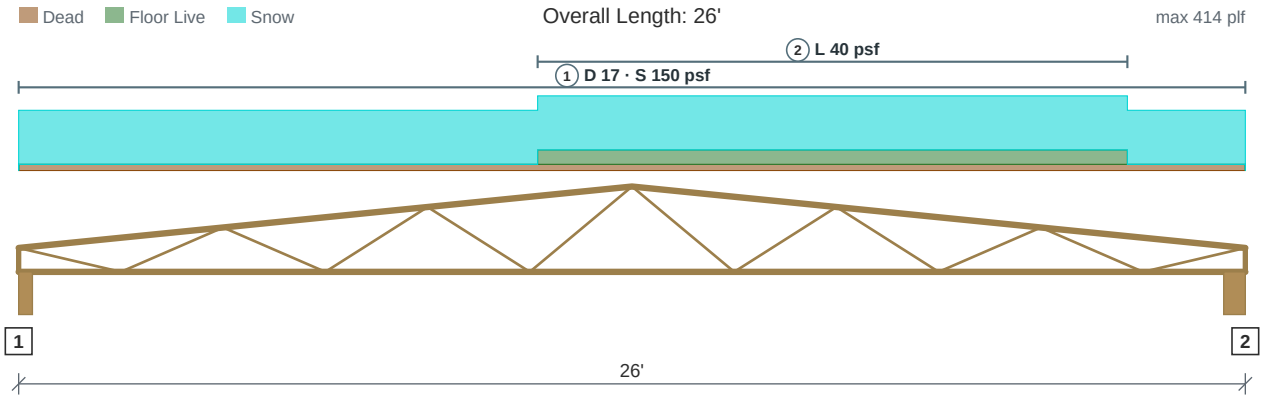

Drawing is conceptual. Locations are measured from the left end of the member; all dimensions are horizontal.

- Generic roof trusses @ 24" o.c., modeled so the loads they carry reach the members and walls that support them as linked loads. The size in the model is a placeholder, so no size or design check is shown; the trusses themselves are designed by the truss manufacturer.

	Loads to Supports (lbs)				
Supports	**Dead**	**Floor Live**	**Snow**	**Total**	**Load goes to**
1 @ 0	442	337	3,900	**4,342**	Header #31, Footing #50 (a framed wall down to the foundation)
2 @ 26'	442	663	3,900	**4,342**	Beam #10 (on top or in a hanger? not set)

Total = the governing ASD combination at that support; the category columns are service loads.

Vertical Loads	Location	Trib. Width	Dead (0.90)	Floor Live (1.00)	Snow (1.15)	Comments
1 - Uniform (PSF)	0 to 26'	24"	17	--	150	
2 - Uniform (PSF)	11' to 23' 6"	24"	--	40	--	

Trusses #16

LOADS ONLY

Generic member for linked loads
no member size or design check

Roof truss (generic) @ 24" o.c.

Level: Roof | Length: 12' 6" | 2018 IRC | 2018 NDS | ASD

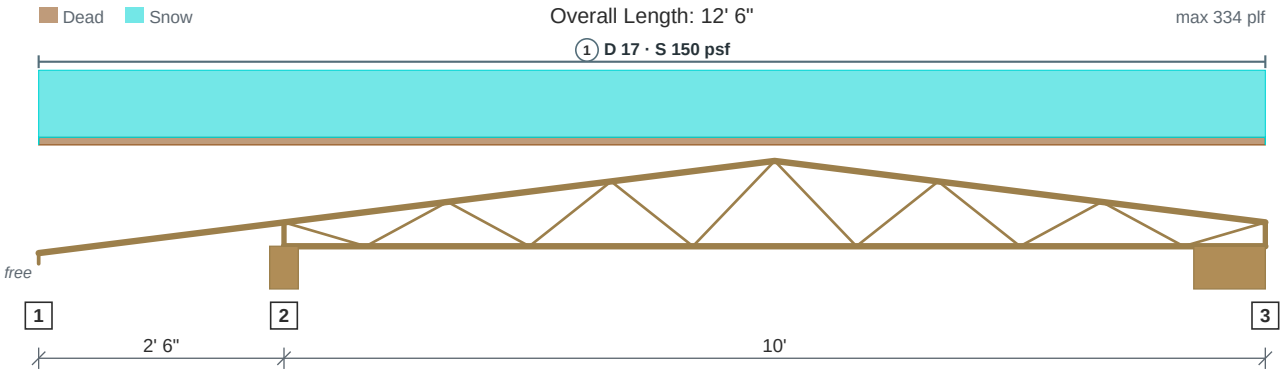

Drawing is conceptual. Locations are measured from the left end of the member; all dimensions are horizontal.

- Generic roof trusses @ 24" o.c., modeled so the loads they carry reach the members and walls that support them as linked loads. The size in the model is a placeholder, so no size or design check is shown; the trusses themselves are designed by the truss manufacturer.

	Loads to Supports (lbs)			
Supports	**Dead**	**Snow**	**Total**	**Load goes to**
1 @ 0	--	--	--	free end (cantilever tip)
2 @ 2' 6"	266	2,344	**2,609**	Header #33, Footing #56 (a framed wall down to the foundation)
3 @ 12' 6"	159	1,406	**1,566**	Beam #15 (on top or in a hanger? not set)

Total = the governing ASD combination at that support; the category columns are service loads.

Vertical Loads	Location	Trib. Width	Dead (0.90)	Snow (1.15)	Comments
1 - Uniform (PSF)	0 to 12' 6"	24"	17	150	

Trusses #17

Roof truss (generic) @ 24" o.c.

Level: Roof | Length: 14' 6" | 2018 IRC | 2018 NDS | ASD

LOADS ONLY

Generic member for linked loads
no member size or design check

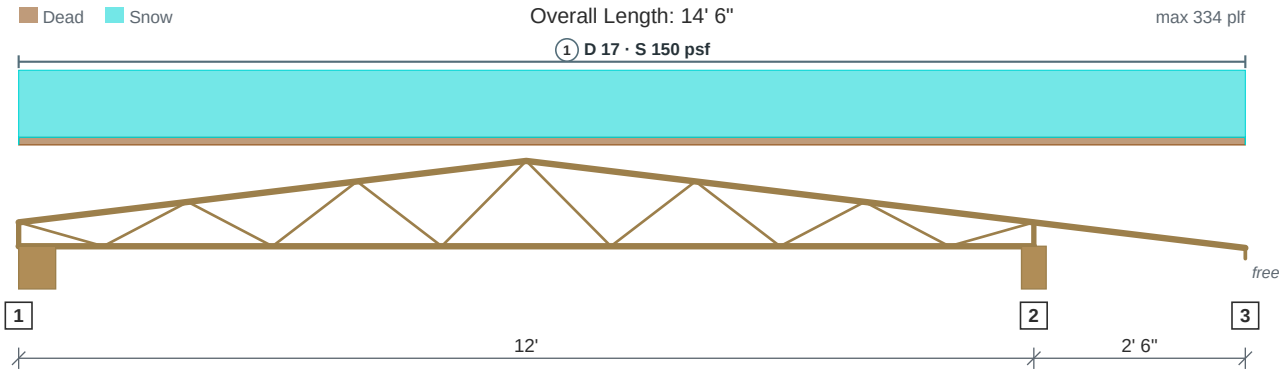

Drawing is conceptual. Locations are measured from the left end of the member; all dimensions are horizontal.

- Generic roof trusses @ 24" o.c., modeled so the loads they carry reach the members and walls that support them as linked loads. The size in the model is a placeholder, so no size or design check is shown; the trusses themselves are designed by the truss manufacturer.

	Loads to Supports (lbs)			
Supports	**Dead**	**Snow**	**Total**	**Load goes to**
1 @ 0	195	1,722	**1,917**	Beam #6 (on top or in a hanger? not set)
2 @ 12'	298	2,628	**2,926**	Header #27, Footing #45 (a framed wall down to the foundation)
3 @ 14' 6"	--	--	--	free end (cantilever tip)

Total = the governing ASD combination at that support; the category columns are service loads.

Vertical Loads	Location	Trib. Width	Dead (0.90)	Snow (1.15)	Comments
1 - Uniform (PSF)	0 to 14' 6"	24"	17	150	

Trusses #18

Roof truss (generic) @ 24" o.c.

Level: Roof | Length: 11' 6" | 2018 IRC | 2018 NDS | ASD

LOADS ONLY

Generic member for linked loads
no member size or design check

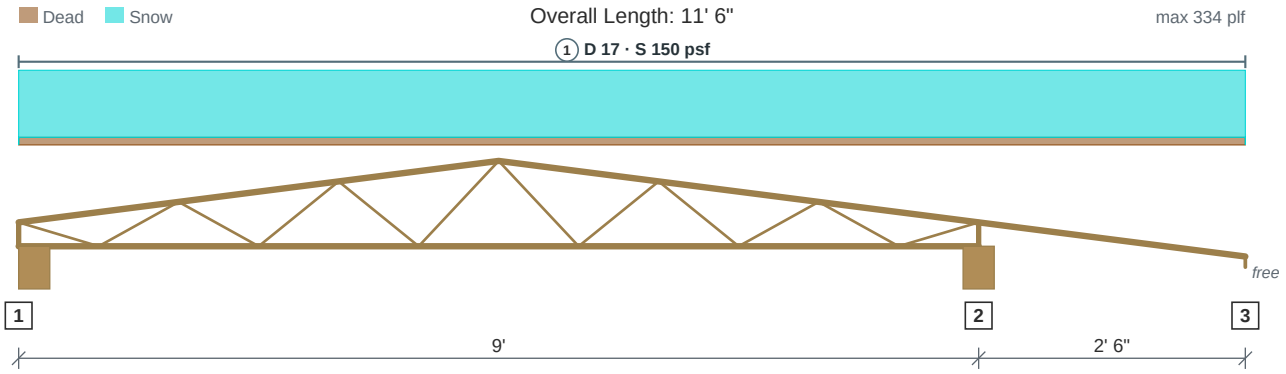

Drawing is conceptual. Locations are measured from the left end of the member; all dimensions are horizontal.

- Generic roof trusses @ 24" o.c., modeled so the loads they carry reach the members and walls that support them as linked loads. The size in the model is a placeholder, so no size or design check is shown; the trusses themselves are designed by the truss manufacturer.

	Loads to Supports (lbs)			
Supports	**Dead**	**Snow**	**Total**	**Load goes to**
1 @ 0	141	1,246	**1,387**	not linked
2 @ 9'	250	2,204	**2,454**	not linked
3 @ 11' 6"	--	--	--	free end (cantilever tip)

Total = the governing ASD combination at that support; the category columns are service loads.

Vertical Loads	Location	Trib. Width	Dead (0.90)	Snow (1.15)	Comments
1 - Uniform (PSF)	0 to 11' 6"	24"	17	150	

Trusses #19

Roof truss (generic) @ 24" o.c.

Level: Roof | Length: 27' | 2018 IRC | 2018 NDS | ASD

LOADS ONLY

Generic member for linked loads
no member size or design check

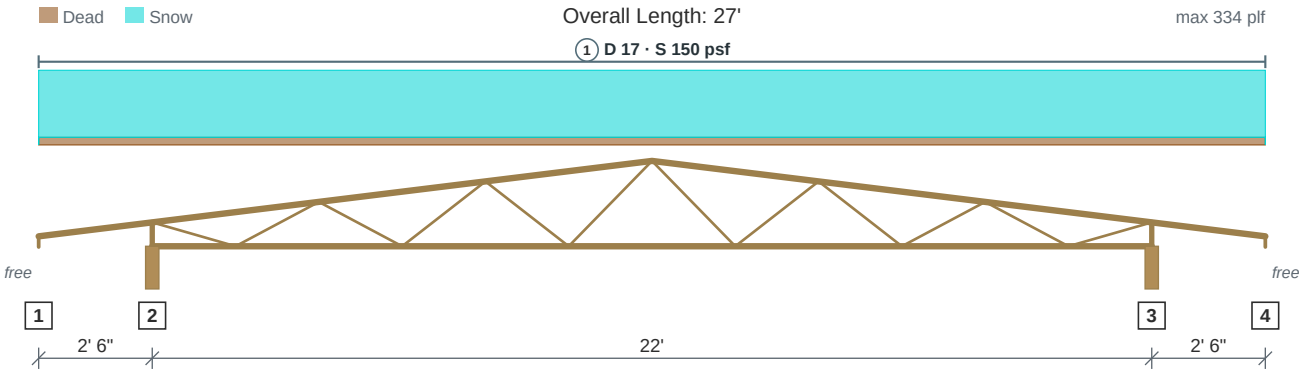

Drawing is conceptual. Locations are measured from the left end of the member; all dimensions are horizontal.

- Generic roof trusses @ 24" o.c., modeled so the loads they carry reach the members and walls that support them as linked loads. The size in the model is a placeholder, so no size or design check is shown; the trusses themselves are designed by the truss manufacturer.

	Loads to Supports (lbs)			
Supports	**Dead**	**Snow**	**Total**	**Load goes to**
1 @ 0	--	--	--	free end (cantilever tip)
2 @ 2' 6"	459	4,050	**4,509**	Header #34, Header #35, Header #36, Header #36, Header #36, Footing #48 (a framed wall down to the foundation)
3 @ 24' 6"	459	4,050	**4,509**	Beam #7 (on top or in a hanger? not set)
4 @ 27'	--	--	--	free end (cantilever tip)

Total = the governing ASD combination at that support; the category columns are service loads.

Vertical Loads	Location	Trib. Width	Dead (0.90)	Snow (1.15)	Comments
1 - Uniform (PSF)	0 to 27'	24"	17	150	

Trusses #20

Roof truss (generic) @ 24" o.c.

Level: Roof | Length: 38' | 2018 IRC | 2018 NDS | ASD

LOADS ONLY

Generic member for linked loads
no member size or design check

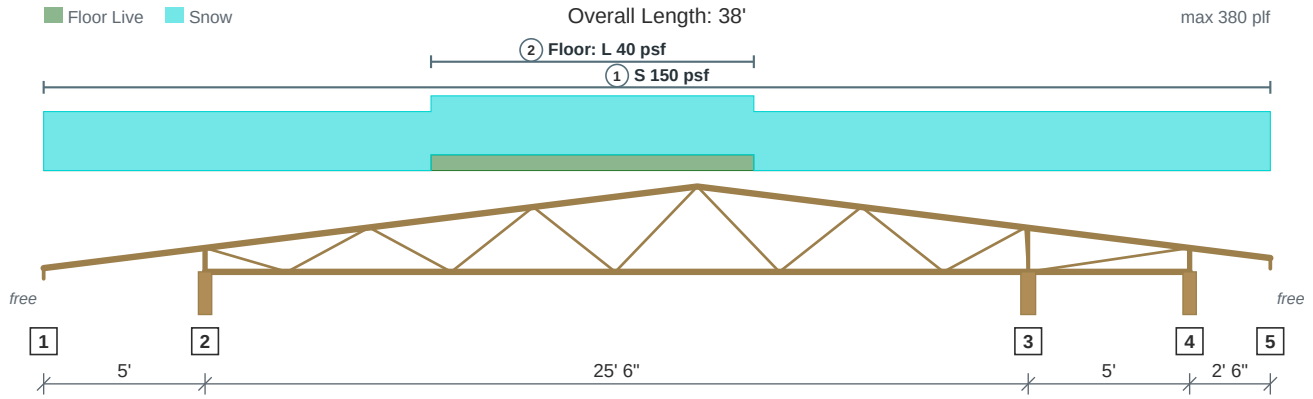

Drawing is conceptual. Locations are measured from the left end of the member; all dimensions are horizontal.

- Generic roof trusses @ 24" o.c., modeled so the loads they carry reach the members and walls that support them as linked loads. The size in the model is a placeholder, so no size or design check is shown; the trusses themselves are designed by the truss manufacturer.

	Loads to Supports (lbs)				
Supports	**Dead**	**Floor Live**	**Snow**	**Total**	**Load goes to**
1 @ 0	--	--	--	--	free end (cantilever tip)
2 @ 5'	--	307	4,731	**4,731**	Footing #46 (a framed wall down to the foundation)
3 @ 30' 6"	--	1,087	8,761	**8,761**	Footing #47 (a framed wall down to the foundation)
4 @ 35' 6"	--	-594	-2,092	**-2,092**	not linked
5 @ 38'	--	--	--	--	free end (cantilever tip)

Total = the governing ASD combination at that support; the category columns are service loads.

Vertical Loads	Location	Trib. Width	Dead (0.90)	Floor Live (1.00)	Snow (1.15)	Comments
1 - Uniform (PSF)	0 to 38'	24"	--	--	150	
2 - Uniform (PSF)	12' to 22'	24"	--	40	--	Floor
3 - Uniform (PSF)	2' 6" to 28'	24"	0	--	--	

Deck Joists #1

PASSED

(1) 2x8 DF-L No. 2 (1 1/2" x 7 1/4") @ 16" o.c.

Controls: Moment 63% used

Level: Floor - 1st Level | Member type: Joist (Floor Joist) | Length: 6' | 2018 IRC | 2018 NDS | ASD

Section adequacy 37.1% (capacity to spare)

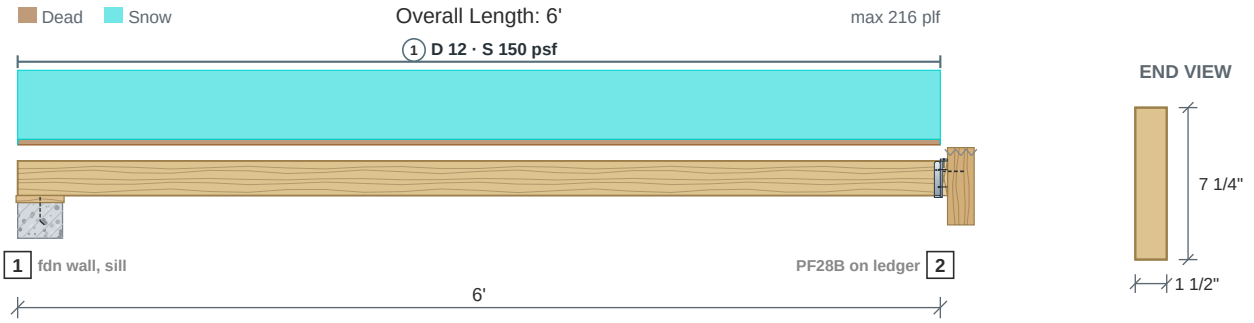

Drawing is conceptual. Locations are measured from the left end of the member; all dimensions are horizontal.

Design Results	Actual @ Location	Allowed	Result	LDF	Load Combination
Member Reaction (lbs)	655 @ 6'	1,172 (1 1/4")	Passed (56% used)	--	
Shear (lbs)	655 @ 6'	1,501	Passed (44% used)	1.15	D+S
Moment (Ft-lbs)	983 @ 3'	1,564	Passed (63% used)	1.15	D+S
Live Load Defl. (in)	0.077 @ 3'	0.3	Passed (L/941)	--	S
Total Load Defl. (in)	0.084 @ 3'	0.3	Passed (L/861)	--	D+S

- Deflection criteria (IRC Table R301.7): floor live alone L/360; roof live or snow alone L/240; dead plus live L/240.
- Bending adjustment factors: CD = 1.15, CF = 1.20, Cr = 1.15, CL = 1.00 (D+S).
- Beam stability: each moment checked against the bracing of its compression edge (CL = 1.00 where braced).
- Member self weight of 2.5 plf is included.
- Calculations per NDS 2018, ASD, every load combination with its own load duration factor.

	Bearing Length		Loads to Supports (lbs)			
Supports	**Provided**	**Required**	**Dead**	**Snow**	**Total**	**Load goes to**
1 @ 0	3 1/2"	11/16"	55	600	**655**	Footing #17 (on the foundation wall, on its mud sill)
2 @ 6'	1 1/4" seat	11/16"	55	600	**655**	Footing #14 (hung on the 2x8 DF-L No. 2 ledger, in a PF28B top flange, 51%)

Total = the governing ASD combination at that support; the category columns are service loads.
Ledger at support 2 (LEDGER Deck Joists #1-2): the 2x8 DF-L No. 2 ledger on a 2x DF-L rim board, 1/2" sheathing between, wet service: SDS25312 screws, 2 rows staggered @ 6 in. o.c., 1 1/2" and 5 3/4" below the ledger's top, 3 3/4" from its ends; 6% to spare at D+S (NDS 12.3, across the gap per AWC TR12; 11.3, C_M 0.7). Not checked here: The deck's lateral load connection (IRC R507.9.2: hold-downs at the ledger).

Lateral Bracing	Bracing Intervals	Comments
Top Edge (Lu)	continuous	braced by the sheathing
Bottom Edge (Lu)	6' o/c	used for C_L only where the bottom edge is in compression

Vertical Loads	Location	Trib. Width	Dead (0.90)	Snow (1.15)	Comments
0 - Self Weight (PLF)	0 to 6'	N/A	2.5	--	
1 - Uniform (PSF)	0 to 6'	16"	12	150	

Shear, Moment and Deflection

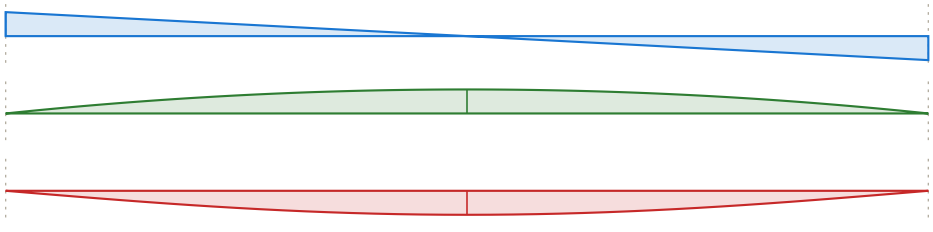

Shear (lbs)
D+S
max 655 @ 0

Moment (ft-lbs)
D+S
max 983 @ 3'

Deflection (in)
D+S
0.084 in down @ 3'
limit 0.3 in on the span

Joist #1

PASSED

(1) 14" Weyerhaeuser TJI 560 @ 12" o.c.

Controls: Bearing 1% used

Level: Floor - 2nd Level | Member type: Joist (Floor Joist) | Length: 8" | 2018 IRC | 2018 NDS | ASD

Section adequacy 98.6% (capacity to spare)

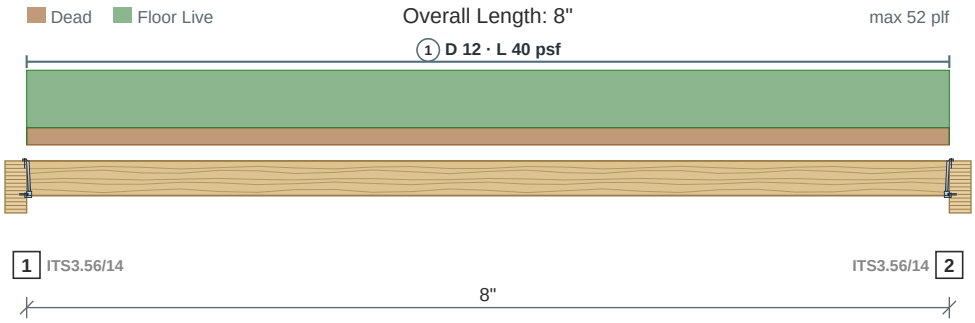

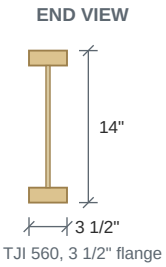

Drawing is conceptual. Locations are measured from the left end of the member; all dimensions are horizontal.

Design Results	Actual @ Location	Allowed	Result	LDF	Load Combination
Member Reaction (lbs)	19 @ 0	1,331 (2")	Passed (1% used)	--	D+L
Shear (lbs)	19 @ 0	2,390	Passed (1% used)	1.00	D+L
Moment (Ft-lbs)	3 @ 4"	11,275	Passed (0% used)	1.00	D+L
Live Load Defl. (in)	0 @ 4"	0.022	Passed (L/9999+)	--	L
Total Load Defl. (in)	0 @ 4"	0.033	Passed (L/9999+)	--	D+L

- Deflection criteria (IRC Table R301.7): floor live alone L/360; roof live or snow alone L/240; dead plus live L/240.
- Member self weight of 4.2 plf is included.
- Calculations per NDS 2018 and Weyerhaeuser TJ-4000 / ICC-ES ESR-1153, ASD, every load combination with its own load duration factor.

	Bearing Length		Loads to Supports (lbs)			
Supports	**Provided**	**Required**	**Dead**	**Floor Live**	**Total**	**Load goes to**
1 @ 0	2" seat	--	5	13	**19**	Beam #18 (flush, in an ITS3.56/14 top flange, 99%)
2 @ 8"	2" seat	--	5	13	**19**	Beam #19 (flush, in an ITS3.56/14 top flange, 99%)

Total = the governing ASD combination at that support; the category columns are service loads.

Lateral Bracing	Bracing Intervals	Comments
Top Edge (Lu)	continuous	braced by the sheathing
Bottom Edge (Lu)	8" o/c	used for C_L only where the bottom edge is in compression

Vertical Loads	Location	Trib. Width	Dead (0.90)	Floor Live (1.00)	Comments
0 - Self Weight (PLF)	0 to 8"	N/A	4.2	--	
1 - Uniform (PSF)	0 to 8"	12"	12	40	

Shear, Moment and Deflection

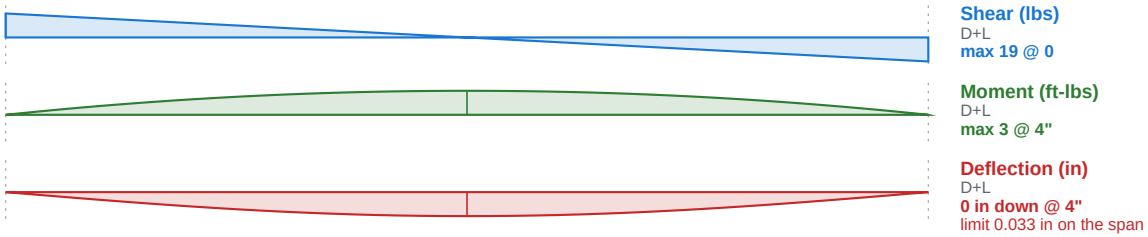

Shear (lbs)
D+L
max 19 @ 0

Moment (ft-lbs)
D+L
max 3 @ 4"

Deflection (in)
D+L
0 in down @ 4"
limit 0.033 in on the span

Joist #2

PASSED

(1) 14" Weyerhaeuser TJI 110 @ 24" o.c.

Controls: Bearing 70% used

Level: Floor - 2nd Level | Member type: Joist (Floor Joist) | Length: 12' 9" | 2018 IRC | 2018 NDS | ASD

Section adequacy 30.3% (capacity to spare)

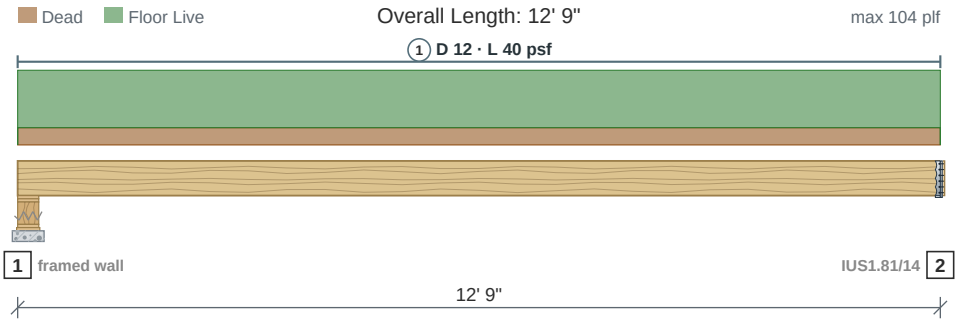

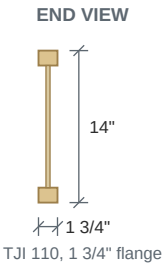

Drawing is conceptual. Locations are measured from the left end of the member; all dimensions are horizontal.

Design Results	Actual @ Location	Allowed	Result	LDF	Load Combination
Member Reaction (lbs)	681 @ 12' 9"	976 (2")	Passed (70% used)	--	D+L
Shear (lbs)	681 @ 0	1,860	Passed (37% used)	1.00	D+L
Moment (Ft-lbs)	2,170 @ 6' 4 1/2"	3,740	Passed (58% used)	1.00	D+L
Live Load Defl. (in)	0.146 @ 6' 4 1/2"	0.425	Passed (L/1,047)	--	L
Total Load Defl. (in)	0.195 @ 6' 4 1/2"	0.637	Passed (L/784)	--	D+L

- Deflection criteria (IRC Table R301.7): floor live alone L/360; roof live or snow alone L/240; dead plus live L/240.
- Member self weight of 2.8 plf is included.
- Calculations per NDS 2018 and Weyerhaeuser TJ-4000 / ICC-ES ESR-1153, ASD, every load combination with its own load duration factor.

	Bearing Length		Loads to Supports (lbs)			
Supports	**Provided**	**Required**	**Dead**	**Floor Live**	**Total**	**Load goes to**
1 @ 0	3 1/2"	--	171	510	**681**	not linked (framed wall)
2 @ 12' 9"	2" seat	--	171	510	**681**	Beam #23 (flush, in an IUS1.81/14 face mount, 38%)

Total = the governing ASD combination at that support; the category columns are service loads.

Lateral Bracing	Bracing Intervals	Comments
Top Edge (Lu)	continuous	braced by the sheathing
Bottom Edge (Lu)	12' 9" o/c	used for C_L only where the bottom edge is in compression

Vertical Loads	Location	Trib. Width	Dead (0.90)	Floor Live (1.00)	Comments
0 - Self Weight (PLF)	0 to 12' 9"	N/A	2.8	--	
1 - Uniform (PSF)	0 to 12' 9"	24"	12	40	

Shear, Moment and Deflection

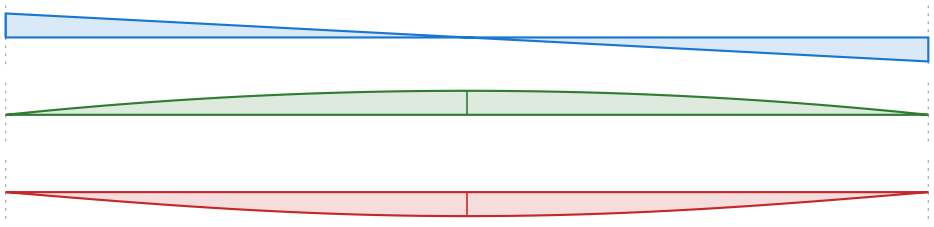

Shear (lbs)
D+L
max 681 @ 0

Moment (ft-lbs)
D+L
max 2,170 @ 6' 4 1/2"

Deflection (in)
D+L
0.162 in down @ 6' 4 1/2"
limit 0.637 in on the span

Joist #3

PASSED

(1) 14" Weyerhaeuser TJI 110 @ 24" o.c.

Controls: Bearing 70% used

Level: Floor - 2nd Level | Member type: Joist (Floor Joist) | Length: 12' 9" | 2018 IRC | 2018 NDS | ASD

Section adequacy 30.3% (capacity to spare)

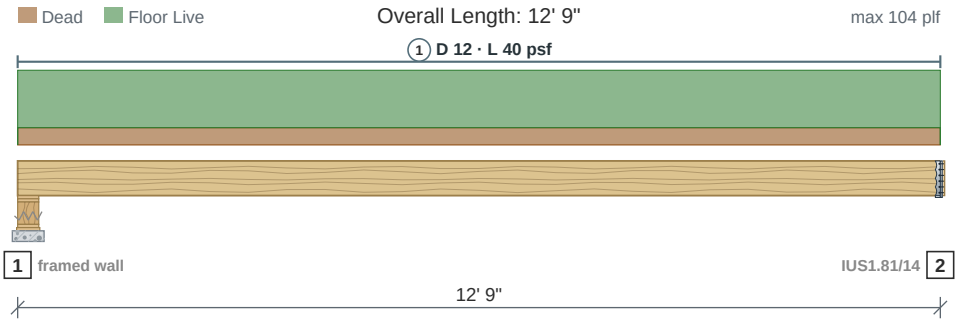

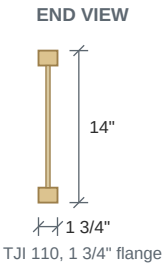

Drawing is conceptual. Locations are measured from the left end of the member; all dimensions are horizontal.

Design Results	Actual @ Location	Allowed	Result	LDF	Load Combination
Member Reaction (lbs)	681 @ 12' 9"	976 (2")	Passed (70% used)	--	D+L
Shear (lbs)	681 @ 0	1,860	Passed (37% used)	1.00	D+L
Moment (Ft-lbs)	2,170 @ 6' 4 1/2"	3,740	Passed (58% used)	1.00	D+L
Live Load Defl. (in)	0.146 @ 6' 4 1/2"	0.425	Passed (L/1,047)	--	L
Total Load Defl. (in)	0.195 @ 6' 4 1/2"	0.637	Passed (L/784)	--	D+L

- Deflection criteria (IRC Table R301.7): floor live alone L/360; roof live or snow alone L/240; dead plus live L/240.
- Member self weight of 2.8 plf is included.
- Calculations per NDS 2018 and Weyerhaeuser TJ-4000 / ICC-ES ESR-1153, ASD, every load combination with its own load duration factor.

	Bearing Length		Loads to Supports (lbs)			
Supports	**Provided**	**Required**	**Dead**	**Floor Live**	**Total**	**Load goes to**
1 @ 0	3 1/2"	--	171	510	**681**	Footing #44 (a framed wall down to the foundation)
2 @ 12' 9"	2" seat	--	171	510	**681**	Beam #23 (flush, in an IUS1.81/14 face mount, 38%)

Total = the governing ASD combination at that support; the category columns are service loads.

Lateral Bracing	Bracing Intervals	Comments
Top Edge (Lu)	continuous	braced by the sheathing
Bottom Edge (Lu)	12' 9" o/c	used for C_L only where the bottom edge is in compression

Vertical Loads	Location	Trib. Width	Dead (0.90)	Floor Live (1.00)	Comments
0 - Self Weight (PLF)	0 to 12' 9"	N/A	2.8	--	
1 - Uniform (PSF)	0 to 12' 9"	24"	12	40	

Shear, Moment and Deflection

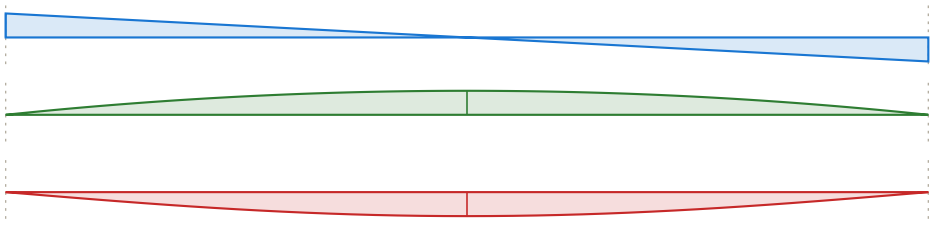

Shear (lbs)
D+L
max 681 @ 0

Moment (ft-lbs)
D+L
max 2,170 @ 6' 4 1/2"

Deflection (in)
D+L
0.162 in down @ 6' 4 1/2"
limit 0.637 in on the span

Joist #13

PASSED

(1) 14" Weyerhaeuser TJI 110 @ 24" o.c.

Controls: Bearing 27% used

Level: Floor - 2nd Level | Member type: Joist (Floor Joist) | Length: 5' | 2018 IRC | 2018 NDS | ASD

Section adequacy 72.7% (capacity to spare)

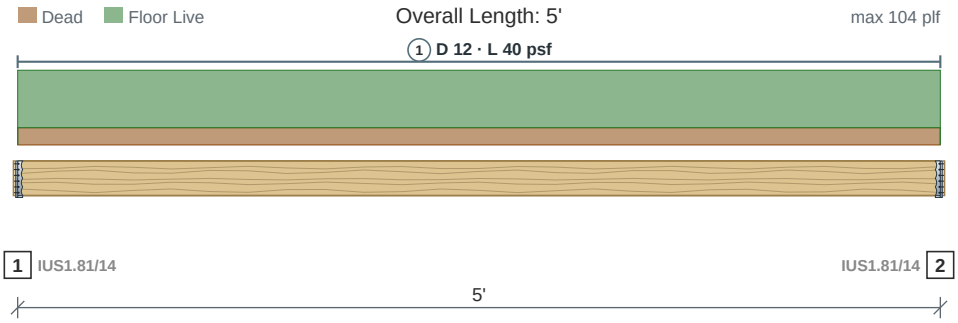

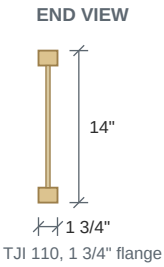

Drawing is conceptual. Locations are measured from the left end of the member; all dimensions are horizontal.

Design Results	Actual @ Location	Allowed	Result	LDF	Load Combination
Member Reaction (lbs)	267 @ 0	976 (2")	Passed (27% used)	--	D+L
Shear (lbs)	267 @ 0	1,860	Passed (14% used)	1.00	D+L
Moment (Ft-lbs)	334 @ 2' 6"	3,740	Passed (9% used)	1.00	D+L
Live Load Defl. (in)	0.007 @ 2' 6"	0.167	Passed (L/8,983)	--	L
Total Load Defl. (in)	0.009 @ 2' 6"	0.25	Passed (L/6,729)	--	D+L

- Deflection criteria (IRC Table R301.7): floor live alone L/360; roof live or snow alone L/240; dead plus live L/240.
- Member self weight of 2.8 plf is included.
- Calculations per NDS 2018 and Weyerhaeuser TJ-4000 / ICC-ES ESR-1153, ASD, every load combination with its own load duration factor.

	Bearing Length		Loads to Supports (lbs)			
Supports	**Provided**	**Required**	**Dead**	**Floor Live**	**Total**	**Load goes to**
1 @ 0	2" seat	--	67	200	**267**	Beam #23 (flush, in an IUS1.81/14 face mount, 76%)
2 @ 5'	2" seat	--	67	200	**267**	Beam #22 (flush, in an IUS1.81/14 face mount, 76%)

Total = the governing ASD combination at that support; the category columns are service loads.

Lateral Bracing	Bracing Intervals	Comments
Top Edge (Lu)	continuous	braced by the sheathing
Bottom Edge (Lu)	5' o/c	used for C_L only where the bottom edge is in compression

Vertical Loads	Location	Trib. Width	Dead (0.90)	Floor Live (1.00)	Comments
0 - Self Weight (PLF)	0 to 5'	N/A	2.8	--	
1 - Uniform (PSF)	0 to 5'	24"	12	40	

Shear, Moment and Deflection

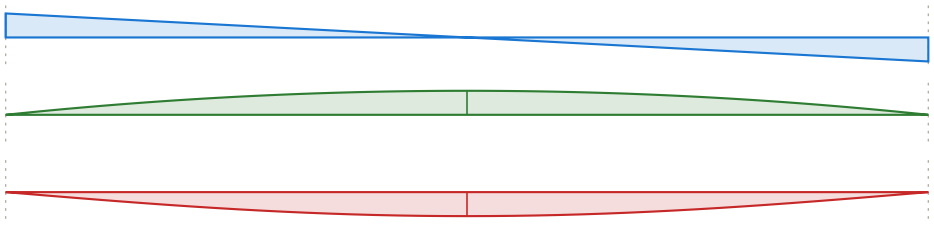

Shear (lbs)
D+L
max 267 @ 0

Moment (ft-lbs)
D+L
max 334 @ 2' 6"

Deflection (in)
D+L
0.004 in down @ 2' 6"
limit 0.25 in on the span

Joist #14

PASSED

(1) 14" Weyerhaeuser TJI 560 @ 12" o.c.

Controls: Bearing 46% used

Level: Floor - 2nd Level | Member type: Joist (Floor Joist) | Length: 22' | 2018 IRC | 2018 NDS | ASD

Section adequacy 53.5% (capacity to spare)

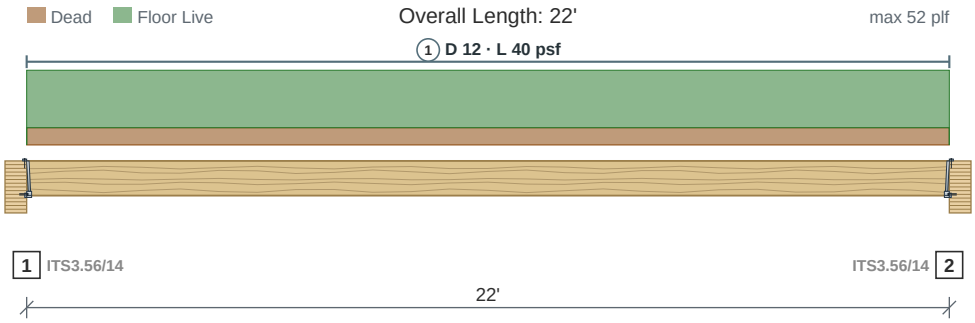

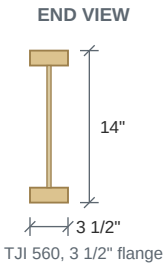

Drawing is conceptual. Locations are measured from the left end of the member; all dimensions are horizontal.

Design Results	Actual @ Location	Allowed	Result	LDF	Load Combination
Member Reaction (lbs)	618 @ 0	1,331 (2")	Passed (46% used)	--	D+L
Shear (lbs)	618 @ 0	2,390	Passed (26% used)	1.00	D+L
Moment (Ft-lbs)	3,400 @ 11'	11,275	Passed (30% used)	1.00	D+L
Live Load Defl. (in)	0.259 @ 11'	0.733	Passed (L/1,019)	--	L
Total Load Defl. (in)	0.364 @ 11'	1.1	Passed (L/726)	--	D+L

- Deflection criteria (IRC Table R301.7): floor live alone L/360; roof live or snow alone L/240; dead plus live L/240.
- Member self weight of 4.2 plf is included.
- Calculations per NDS 2018 and Weyerhaeuser TJ-4000 / ICC-ES ESR-1153, ASD, every load combination with its own load duration factor.

	Bearing Length		Loads to Supports (lbs)			
Supports	**Provided**	**Required**	**Dead**	**Floor Live**	**Total**	**Load goes to**
1 @ 0	2" seat	--	178	440	**618**	Beam #17 (flush, in an ITS3.56/14 top flange, 58%)
2 @ 22'	2" seat	--	178	440	**618**	Beam #18 (flush, in an ITS3.56/14 top flange, 58%)

Total = the governing ASD combination at that support; the category columns are service loads.

Lateral Bracing	Bracing Intervals	Comments
Top Edge (Lu)	continuous	braced by the sheathing
Bottom Edge (Lu)	22' o/c	used for C_L only where the bottom edge is in compression

Vertical Loads	Location	Trib. Width	Dead (0.90)	Floor Live (1.00)	Comments
0 - Self Weight (PLF)	0 to 22'	N/A	4.2	--	
1 - Uniform (PSF)	0 to 22'	12"	12	40	

Shear, Moment and Deflection

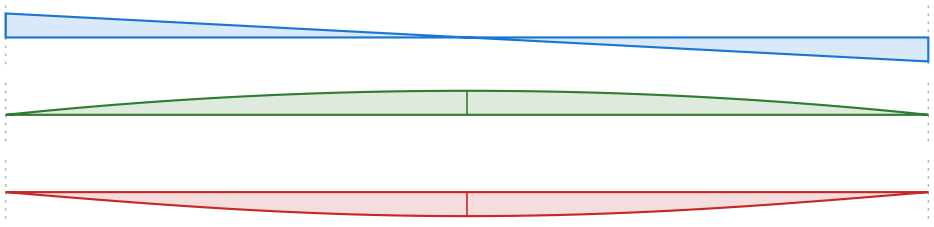

Shear (lbs)
D+L
max 618 @ 0

Moment (ft-lbs)
D+L
max 3,400 @ 11'

Deflection (in)
D+L
0.32 in down @ 11'
limit 1.1 in on the span

Joist #15

PASSED

(1) 14" Weyerhaeuser TJI 560 @ 12" o.c.

Controls: Bearing 5% used

Level: Floor - 2nd Level | Member type: Joist (Floor Joist) | Length: 2' 6" | 2018 IRC | 2018 NDS | ASD

Section adequacy 94.7% (capacity to spare)

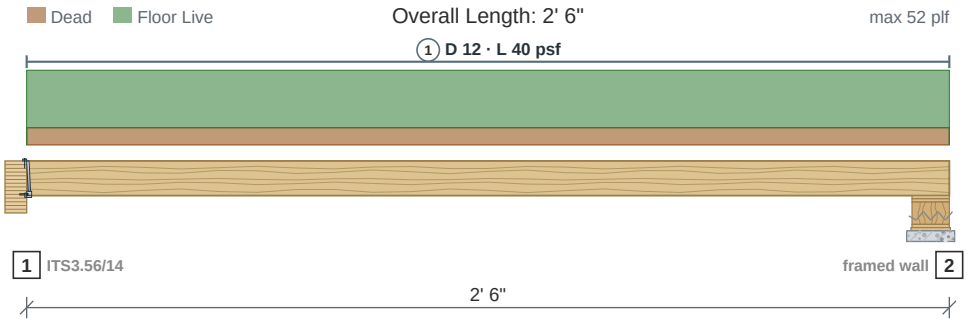

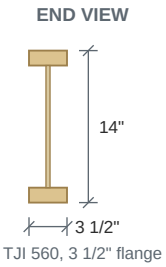

Drawing is conceptual. Locations are measured from the left end of the member; all dimensions are horizontal.

Design Results	Actual @ Location	Allowed	Result	LDF	Load Combination
Member Reaction (lbs)	70 @ 0	1,331 (2")	Passed (5% used)	--	D+L
Shear (lbs)	70 @ 0	2,390	Passed (3% used)	1.00	D+L
Moment (Ft-lbs)	44 @ 1' 3"	11,275	Passed (0% used)	1.00	D+L
Live Load Defl. (in)	0 @ 1' 3"	0.083	Passed (L/9999+)	--	L
Total Load Defl. (in)	0.001 @ 1' 3"	0.125	Passed (L/9999+)	--	D+L

- Deflection criteria (IRC Table R301.7): floor live alone L/360; roof live or snow alone L/240; dead plus live L/240.
- Member self weight of 4.2 plf is included.
- Calculations per NDS 2018 and Weyerhaeuser TJ-4000 / ICC-ES ESR-1153, ASD, every load combination with its own load duration factor.

	Bearing Length		Loads to Supports (lbs)			
Supports	**Provided**	**Required**	**Dead**	**Floor Live**	**Total**	**Load goes to**
1 @ 0	2" seat	--	20	50	**70**	Beam #19 (flush, in an ITS3.56/14 top flange, 95%)
2 @ 2' 6"	6 3/4"	--	20	50	**70**	Beam #11, Footing #68 (a framed wall down to the foundation)

Total = the governing ASD combination at that support; the category columns are service loads.
Hanger J15-X2, off a member not in the model: IUS3.56/14 face mount on Crawl space header at support 2, 3 1/2 x 15 1/4 sawn, for 70 lb D+L on each (support 2).

Lateral Bracing	Bracing Intervals	Comments
Top Edge (Lu)	continuous	braced by the sheathing
Bottom Edge (Lu)	2' 6" o/c	used for C_L only where the bottom edge is in compression

Vertical Loads	Location	Trib. Width	Dead (0.90)	Floor Live (1.00)	Comments
0 - Self Weight (PLF)	0 to 2' 6"	N/A	4.2	--	
1 - Uniform (PSF)	0 to 2' 6"	12"	12	40	

Shear, Moment and Deflection

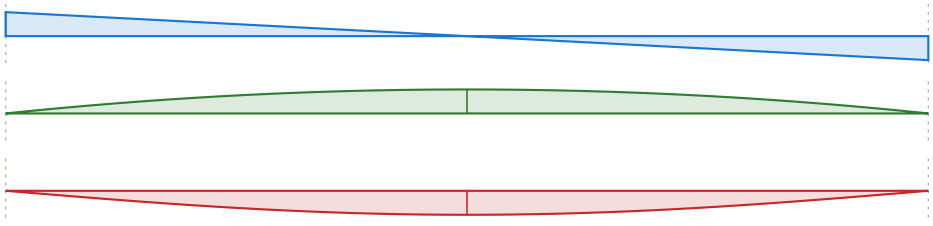

Shear (lbs)
D+L
max 70 @ 0

Moment (ft-lbs)
D+L
max 44 @ 1' 3"

Deflection (in)
D+L
0 in down @ 1' 3"
limit 0.125 in on the span

Joist #16

PASSED

(1) 14" Weyerhaeuser TJI 560 @ 12" o.c.

Controls: Bearing 5% used

Level: Floor - 2nd Level | Member type: Joist (Floor Joist) | Length: 2' 6" | 2018 IRC | 2018 NDS | ASD

Section adequacy 94.7% (capacity to spare)

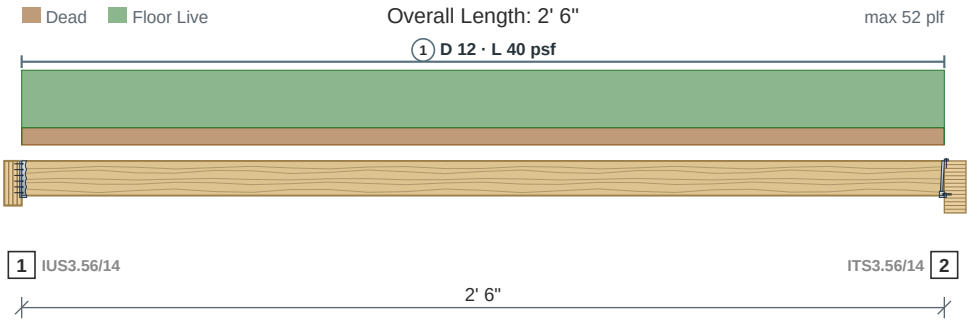

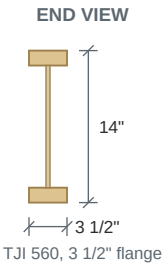

Drawing is conceptual. Locations are measured from the left end of the member; all dimensions are horizontal.

Design Results	Actual @ Location	Allowed	Result	LDF	Load Combination
Member Reaction (lbs)	70 @ 0	1,331 (2")	Passed (5% used)	--	D+L
Shear (lbs)	70 @ 0	2,390	Passed (3% used)	1.00	D+L
Moment (Ft-lbs)	44 @ 1' 3"	11,275	Passed (0% used)	1.00	D+L
Live Load Defl. (in)	0 @ 1' 3"	0.083	Passed (L/9999+)	--	L
Total Load Defl. (in)	0.001 @ 1' 3"	0.125	Passed (L/9999+)	--	D+L

- Deflection criteria (IRC Table R301.7): floor live alone L/360; roof live or snow alone L/240; dead plus live L/240.
- Member self weight of 4.2 plf is included.
- Calculations per NDS 2018 and Weyerhaeuser TJ-4000 / ICC-ES ESR-1153, ASD, every load combination with its own load duration factor.

	Bearing Length		Loads to Supports (lbs)			
Supports	**Provided**	**Required**	**Dead**	**Floor Live**	**Total**	**Load goes to**
1 @ 0	2" seat	--	20	50	**70**	Beam #8 (flush, in an IUS3.56/14 face mount, 95%)
2 @ 2' 6"	2" seat	--	20	50	**70**	Beam #17 (flush, in an ITS3.56/14 top flange, 95%)

Total = the governing ASD combination at that support; the category columns are service loads.

Lateral Bracing	Bracing Intervals	Comments
Top Edge (Lu)	continuous	braced by the sheathing
Bottom Edge (Lu)	2' 6" o/c	used for C_L only where the bottom edge is in compression

Vertical Loads	Location	Trib. Width	Dead (0.90)	Floor Live (1.00)	Comments
0 - Self Weight (PLF)	0 to 2' 6"	N/A	4.2	--	
1 - Uniform (PSF)	0 to 2' 6"	12"	12	40	

Shear, Moment and Deflection

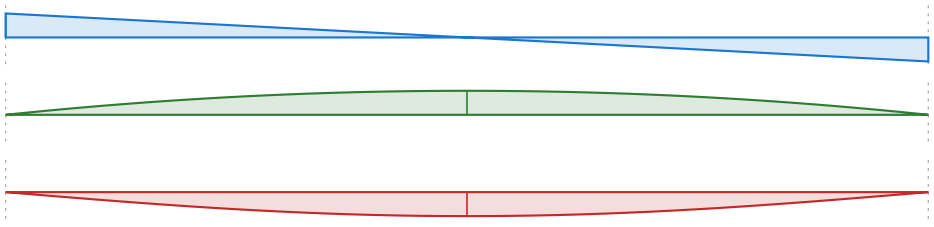

Shear (lbs)
D+L
max 70 @ 0

Moment (ft-lbs)
D+L
max 44 @ 1' 3"

Deflection (in)
D+L
0 in down @ 1' 3"
limit 0.125 in on the span

Joists #4

PASSED

(1) 9 1/2" Weyerhaeuser TJI 110 @ 24" o.c.

Controls: Moment 64% used

Level: Floor - 1st Level | Member type: Joist (Floor Joist) | Length: 11' | 2018 IRC | 2018 NDS | ASD

Section adequacy 35.7% (capacity to spare)

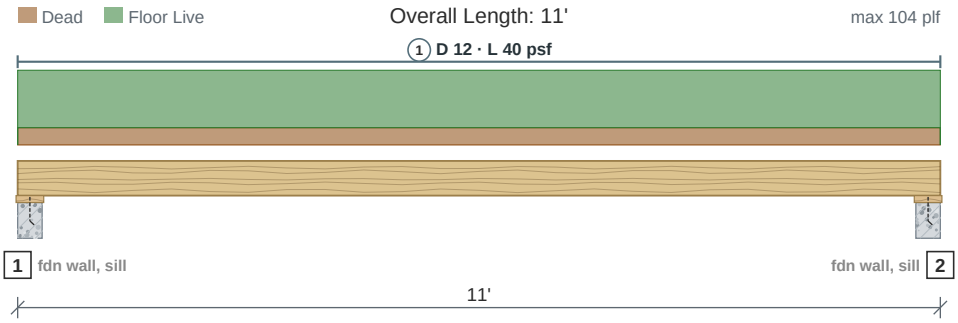

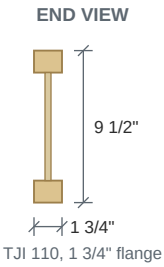

Drawing is conceptual. Locations are measured from the left end of the member; all dimensions are horizontal.

Design Results	Actual @ Location	Allowed	Result	LDF	Load Combination
Member Reaction (lbs)	585 @ 0	1,220 (3 1/2")	Passed (48% used)	--	D+L
Shear (lbs)	585 @ 0	1,220	Passed (48% used)	1.00	D+L
Moment (Ft-lbs)	1,608 @ 5' 6"	2,500	Passed (64% used)	1.00	D+L
Live Load Defl. (in)	0.195 @ 5' 6"	0.367	Passed (L/677)	--	L
Total Load Defl. (in)	0.259 @ 5' 6"	0.55	Passed (L/509)	--	D+L

- Deflection criteria (IRC Table R301.7): floor live alone L/360; roof live or snow alone L/240; dead plus live L/240.
- Member self weight of 2.3 plf is included.
- Calculations per NDS 2018 and Weyerhaeuser TJ-4000 / ICC-ES ESR-1153, ASD, every load combination with its own load duration factor.

	Bearing Length		Loads to Supports (lbs)			
Supports	**Provided**	**Required**	**Dead**	**Floor Live**	**Total**	**Load goes to**
1 @ 0	3 1/2"	--	145	440	**585**	Footing #1 (on the foundation wall, on its mud sill)
2 @ 11'	3 1/2"	--	145	440	**585**	Footing #2 (on the foundation wall, on its mud sill)

Total = the governing ASD combination at that support; the category columns are service loads.

Lateral Bracing	Bracing Intervals	Comments
Top Edge (Lu)	continuous	braced by the sheathing
Bottom Edge (Lu)	11' o/c	used for C_L only where the bottom edge is in compression

Vertical Loads	Location	Trib. Width	Dead (0.90)	Floor Live (1.00)	Comments
0 - Self Weight (PLF)	0 to 11'	N/A	2.3	--	
1 - Uniform (PSF)	0 to 11'	24"	12	40	

Shear, Moment and Deflection

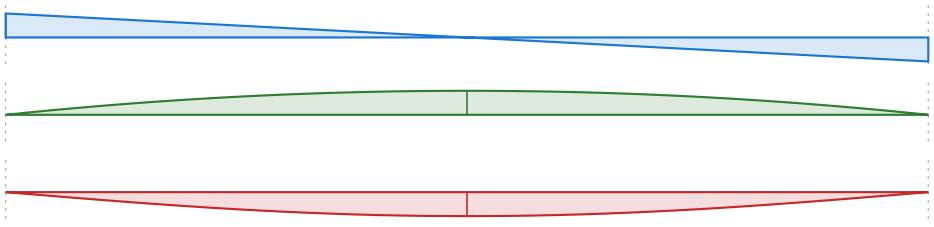

Shear (lbs)
D+L
max 585 @ 0

Moment (ft-lbs)
D+L
max 1,608 @ 5' 6"

Deflection (in)
D+L
0.223 in down @ 5' 6"
limit 0.55 in on the span

Joists #5

PASSED

(1) 9 1/2" Weyerhaeuser TJI 110 @ 24" o.c.

Controls: Bearing 61% used

Level: Floor - 1st Level | Member type: Joist (Floor Joist) | Length: 48' 6" | 2018 IRC | 2018 NDS | ASD

Section adequacy 39% (capacity to spare)

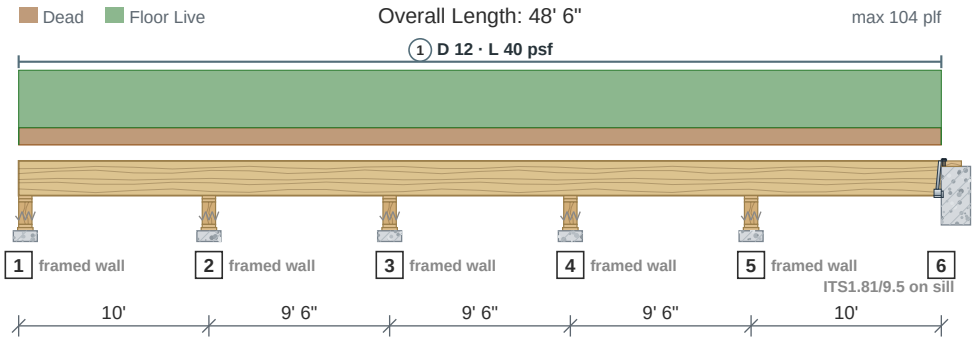

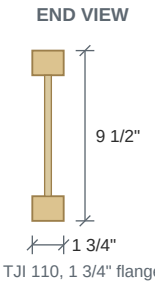

Drawing is conceptual. Locations are measured from the left end of the member; all dimensions are horizontal.

Design Results	Actual @ Location	Allowed	Result	LDF	Load Combination
Member Reaction (lbs)	1,181 @ 10'	1,935 (3 1/2")	Passed (61% used)	--	D+L
Shear (lbs)	640 @ 38' 6"	1,220	Passed (52% used)	1.00	D+L
Moment (Ft-lbs)	1,085 @ 44' 7 7/16"	2,500	Passed (43% used)	1.00	D+L
Live Load Defl. (in)	0.078 @ 44' 11/16"	0.333	Passed (L/1,541)	--	L
Total Load Defl. (in)	0.103 @ 44' 11/16"	0.5	Passed (L/1,160)	--	D+L

- Deflection criteria (IRC Table R301.7): floor live alone L/360; roof live or snow alone L/240; dead plus live L/240.
- Member self weight of 2.3 plf is included.
- Calculations per NDS 2018 and Weyerhaeuser TJ-4000 / ICC-ES ESR-1153, ASD, every load combination with its own load duration factor.

	Bearing Length		Loads to Supports (lbs)			
Supports	**Provided**	**Required**	**Dead**	**Floor Live**	**Total**	**Load goes to**
1 @ 0	3 1/2"	--	105	318	**423**	Footing #10 (a framed wall down to the foundation)
2 @ 10'	3 1/2"	--	292	889	**1,181**	Footing #57 (a framed wall down to the foundation)
3 @ 19' 6"	3 1/2"	--	241	733	**974**	Footing #58 (a framed wall down to the foundation)
4 @ 29'	3 1/2"	--	241	733	**974**	Footing #59 (a framed wall down to the foundation)
5 @ 38' 6"	3 1/2"	--	292	889	**1,181**	Footing #60 (a framed wall down to the foundation)
6 @ 48' 6"	2" seat	--	105	318	**423**	Footing #3 (hung from the mud sill, in an ITS1.81/9.5 top flange on the sill, 63%)

Total = the governing ASD combination at that support; the category columns are service loads.
Hanger J5-X2, off a member not in the model: (2) IUS1.81/9.5 face mount, 1 on each side on Crawl space header at support 2, 3 1/2 x 15 1/4 sawn, for 532 lb D+L on each (support 2 with the member cut there: the left side, the worse; the right side 396 lb D+L).
Hanger J5-X3, off a member not in the model: (2) IUS1.81/9.5 face mount, 1 on each side on Crawl space header at support 3, 3 1/2 x 15 1/4 sawn, for 406 lb D+L on each (support 3 with the member cut there: the right side, the worse; the left side 372 lb D+L).
Hanger J5-X4, off a member not in the model: (2) IUS1.81/9.5 face mount, 1 on each side on Crawl space header at support 4, 3 1/2 x 15 1/4 sawn, for 406 lb D+L on each (support 4 with the member cut there: the left side, the worse; the right side 372 lb D+L).
Hanger J5-X5, off a member not in the model: (2) IUS1.81/9.5 face mount, 1 on each side on Crawl space header at support 5, 3 1/2 x 15 1/4 sawn, for 532 lb D+L on each (support 5 with the member cut there: the right side, the worse; the left side 396 lb D+L).

Lateral Bracing	Bracing Intervals	Comments
Top Edge (Lu)	continuous	braced by the sheathing
Bottom Edge (Lu)	10' o/c	used for C_L only where the bottom edge is in compression

Vertical Loads	Location	Trib. Width	Dead (0.90)	Floor Live (1.00)	Comments
0 - Self Weight (PLF)	0 to 48' 6"	N/A	2.3	--	
1 - Uniform (PSF)	0 to 48' 6"	24"	12	40	

Shear, Moment and Deflection

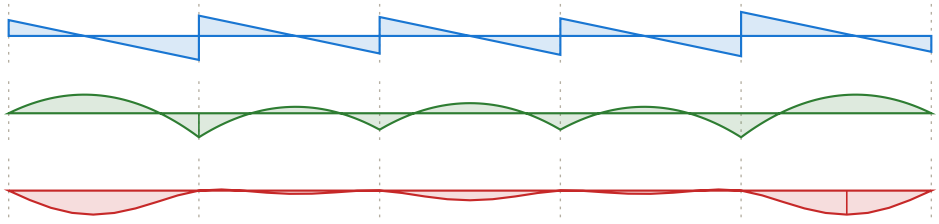

Shear (lbs)
D+L
max 640 @ 38' 6"

Moment (ft-lbs)
D+L
max -1,085 @ 10'

Deflection (in)
D+L
0.079 in down @ 44' 11/16"
limit 0.5 in on the span

Joists #6

PASSED

(1) 9 1/2" Weyerhaeuser TJI 110 @ 24" o.c.

Controls: Bearing 47% used

Level: Floor - 1st Level | Member type: Joist (Floor Joist) | Length: 23' | 2018 IRC | 2018 NDS | ASD

Section adequacy 53% (capacity to spare)

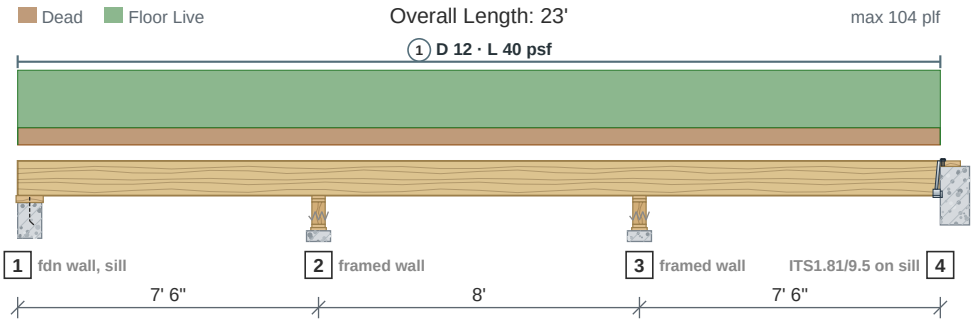

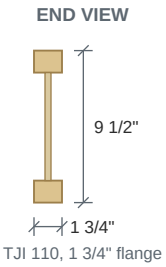

Drawing is conceptual. Locations are measured from the left end of the member; all dimensions are horizontal.

Design Results	Actual @ Location	Allowed	Result	LDF	Load Combination
Member Reaction (lbs)	909 @ 7' 6"	1,935 (3 1/2")	Passed (47% used)	--	D+L
Shear (lbs)	484 @ 15' 6"	1,220	Passed (40% used)	1.00	D+L
Moment (Ft-lbs)	636 @ 2' 11 7/8"	2,500	Passed (25% used)	1.00	D+L
Live Load Defl. (in)	0.029 @ 19' 9 7/16"	0.25	Passed (L/3,119)	--	L
Total Load Defl. (in)	0.038 @ 19' 9 7/16"	0.375	Passed (L/2,347)	--	D+L

- Deflection criteria (IRC Table R301.7): floor live alone L/360; roof live or snow alone L/240; dead plus live L/240.
- Member self weight of 2.3 plf is included.
- Calculations per NDS 2018 and Weyerhaeuser TJ-4000 / ICC-ES ESR-1153, ASD, every load combination with its own load duration factor.

	Bearing Length		Loads to Supports (lbs)			
Supports	**Provided**	**Required**	**Dead**	**Floor Live**	**Total**	**Load goes to**
1 @ 0	3 1/2"	--	78	236	**314**	Footing #12 (on the foundation wall, on its mud sill)
2 @ 7' 6"	3 1/2"	--	225	684	**909**	Footing #61 (a framed wall down to the foundation)
3 @ 15' 6"	3 1/2"	--	225	684	**909**	Footing #62 (a framed wall down to the foundation)
4 @ 23'	2" seat	--	78	236	**314**	not linked (hung from the mud sill, in an ITS1.81/9.5 top flange on the sill, 73%)

Total = the governing ASD combination at that support; the category columns are service loads.
Hanger J6-X2, off a member not in the model: (2) IUS1.81/9.5 face mount, 1 on each side on Crawl space header at support 2, 3 1/2 x 15 1/4 sawn, for 399 lb D+L on each (support 2 with the member cut there: the left side, the worse; the right side 325 lb D+L).
Hanger J6-X3, off a member not in the model: (2) IUS1.81/9.5 face mount, 1 on each side on Crawl space header at support 3, 3 1/2 x 15 1/4 sawn, for 399 lb D+L on each (support 3 with the member cut there: the right side, the worse; the left side 325 lb D+L).

Lateral Bracing	Bracing Intervals	Comments
Top Edge (Lu)	continuous	braced by the sheathing
Bottom Edge (Lu)	8' o/c	used for C_L only where the bottom edge is in compression

Vertical Loads	Location	Trib. Width	Dead (0.90)	Floor Live (1.00)	Comments
0 - Self Weight (PLF)	0 to 23'	N/A	2.3	--	
1 - Uniform (PSF)	0 to 23'	24"	12	40	

Shear, Moment and Deflection

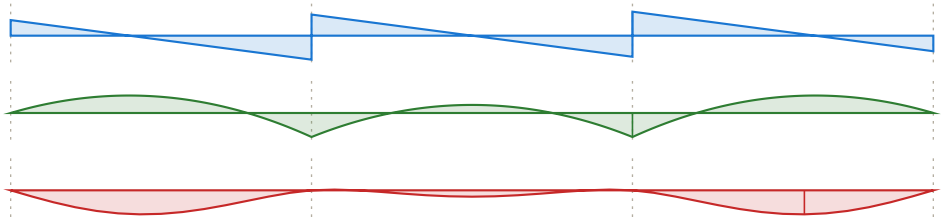

Shear (lbs)
D+L
max 483 @ 15' 6"

Moment (ft-lbs)
D+L
max -636 @ 15' 6"

Deflection (in)
D+L
0.024 in down @ 19' 9 7/16"
limit 0.375 in on the span

Joists #7

(1) 9 1/2" Weyerhaeuser TJI 110 @ 24" o.c.

Level: Floor - 1st Level | Member type: Joist (Floor Joist) | Length: 30' 6" | 2018 IRC | 2018 NDS | ASD

PASSED

Controls: Bearing 53% used

Section adequacy 47.4% (capacity to spare)

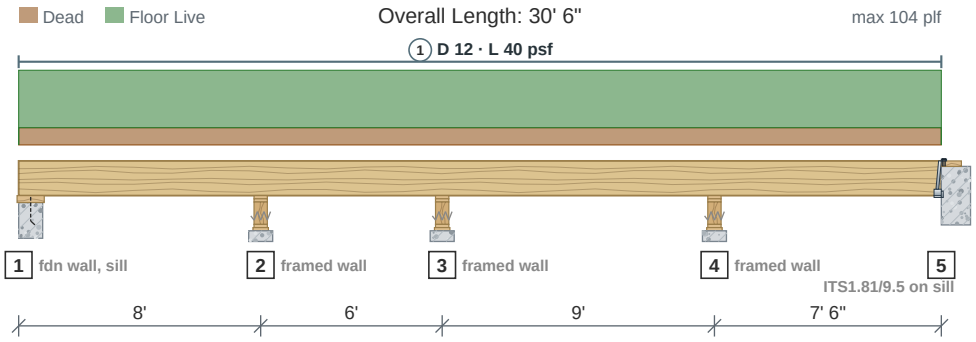

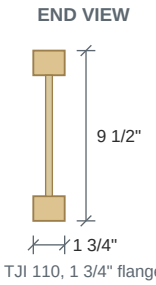

Drawing is conceptual. Locations are measured from the left end of the member; all dimensions are horizontal.

Design Results	Actual @ Location	Allowed	Result	LDF	Load Combination
Member Reaction (lbs)	1,018 @ 23'	1,935 (3 1/2")	Passed (53% used)	--	D+L
Shear (lbs)	513 @ 23'	1,220	Passed (42% used)	1.00	D+L
Moment (Ft-lbs)	796 @ 3' 4 1/4"	2,500	Passed (32% used)	1.00	D+L
Live Load Defl. (in)	0.038 @ 3' 7 5/8"	0.267	Passed (L/2,547)	--	L
Total Load Defl. (in)	0.05 @ 3' 7 5/8"	0.4	Passed (L/1,916)	--	D+L

- Deflection criteria (IRC Table R301.7): floor live alone L/360; roof live or snow alone L/240; dead plus live L/240.
- Member self weight of 2.3 plf is included.
- Calculations per NDS 2018 and Weyerhaeuser TJ-4000 / ICC-ES ESR-1153, ASD, every load combination with its own load duration factor.

	Bearing Length		Loads to Supports (lbs)			
Supports	**Provided**	**Required**	**Dead**	**Floor Live**	**Total**	**Load goes to**
1 @ 0	5 1/2"	--	87	265	**352**	Footing #14 (on the foundation wall, on its mud sill)
2 @ 8'	3 1/2"	--	207	629	**835**	Footing #13 (a framed wall down to the foundation)
3 @ 14'	3 1/2"	--	184	560	**744**	Footing #63 (a framed wall down to the foundation)
4 @ 23'	3 1/2"	--	252	766	**1,018**	Footing #64 (a framed wall down to the foundation)
5 @ 30' 6"	2" seat	--	72	220	**293**	Bearing wall (marked, hung from the mud sill, in an ITS1.81/9.5 top flange on the sill, 75%)

Total = the governing ASD combination at that support; the category columns are service loads.
Hanger J7-X2, off a member not in the model: (2) IUS1.81/9.5 face mount, 1 on each side on Crawl space header at support 2, 3 1/2 x 15 1/4 sawn, for 425 lb D+L on each (support 2 with the member cut there: the left side, the worse; the right side 217 lb D+L).
Hanger J7-X3, off a member not in the model: (2) IUS1.81/9.5 face mount, 1 on each side on Crawl space header at support 3, 3 1/2 x 15 1/4 sawn, for 375 lb D+L on each (support 3 with the member cut there: the right side, the worse; the left side 204 lb D+L).
Hanger J7-X4, off a member not in the model: (2) IUS1.81/9.5 face mount, 1 on each side on Crawl space header at support 4, 3 1/2 x 15 1/4 sawn, for 399 lb D+L on each (support 4 with the member cut there: the right side, the worse; the left side 397 lb D+L).

Lateral Bracing	Bracing Intervals	Comments
Top Edge (Lu)	continuous	braced by the sheathing
Bottom Edge (Lu)	9' o/c	used for C_L only where the bottom edge is in compression

Vertical Loads	Location	Trib. Width	Dead (0.90)	Floor Live (1.00)	Comments
0 - Self Weight (PLF)	0 to 30' 6"	N/A	2.3	--	
1 - Uniform (PSF)	0 to 30' 6"	24"	12	40	

Shear, Moment and Deflection

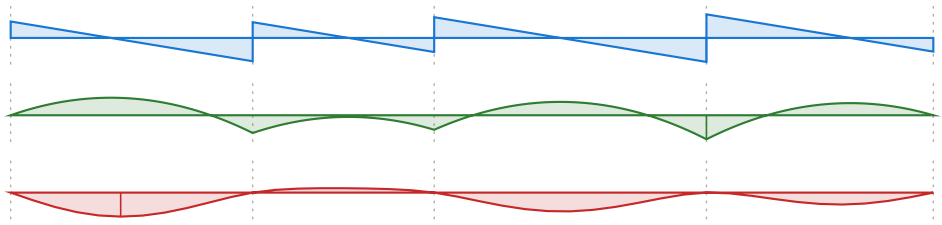

Shear (lbs)
D+L
max -513 @ 23'

Moment (ft-lbs)
D+L
max -796 @ 23'

Deflection (in)
D+L
0.037 in down @ 3' 7 5/8"
limit 0.4 in on the span

Joists #8

PASSED

(1) 9 1/2" Weyerhaeuser TJI 110 @ 24" o.c.

Controls: Bearing 53% used

Level: Floor - 1st Level | Member type: Joist (Floor Joist) | Length: 41' | 2018 IRC | 2018 NDS | ASD

Section adequacy 46.7% (capacity to spare)

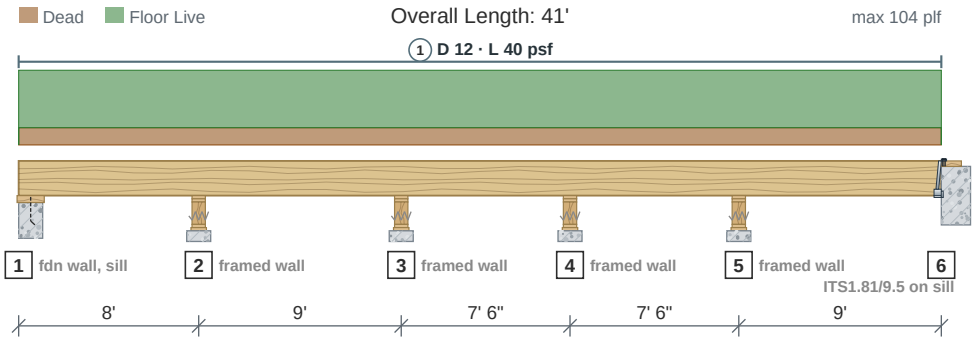

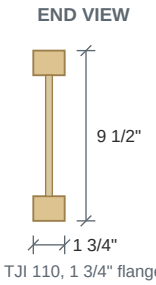

Drawing is conceptual. Locations are measured from the left end of the member; all dimensions are horizontal.

Design Results	Actual @ Location	Allowed	Result	LDF	Load Combination
Member Reaction (lbs)	1,031 @ 32'	1,935 (3 1/2")	Passed (53% used)	--	D+L
Shear (lbs)	572 @ 32'	1,220	Passed (47% used)	1.00	D+L
Moment (Ft-lbs)	840 @ 37' 3 3/4"	2,500	Passed (34% used)	1.00	D+L
Live Load Defl. (in)	0.055 @ 37'	0.3	Passed (L/1,971)	--	L
Total Load Defl. (in)	0.073 @ 37'	0.45	Passed (L/1,483)	--	D+L

- Deflection criteria (IRC Table R301.7): floor live alone L/360; roof live or snow alone L/240; dead plus live L/240.
- Member self weight of 2.3 plf is included.
- Calculations per NDS 2018 and Weyerhaeuser TJ-4000 / ICC-ES ESR-1153, ASD, every load combination with its own load duration factor.

	Bearing Length		Loads to Supports (lbs)			
Supports	**Provided**	**Required**	**Dead**	**Floor Live**	**Total**	**Load goes to**
1 @ 0	5 1/2"	--	80	244	**324**	Footing #18 (on the foundation wall, on its mud sill)
2 @ 8'	3 1/2"	--	254	771	**1,025**	not linked (framed wall)
3 @ 17'	3 1/2"	--	220	668	**888**	not linked (framed wall)
4 @ 24' 6"	3 1/2"	--	174	530	**705**	Footing #19 (a framed wall down to the foundation)
5 @ 32'	3 1/2"	--	255	776	**1,031**	Footing #65 (a framed wall down to the foundation)
6 @ 41'	2" seat	--	95	290	**385**	Footing #20 (hung from the mud sill, in an ITS1.81/9.5 top flange on the sill, 67%)

Total = the governing ASD combination at that support; the category columns are service loads.
Hanger J8-X2, off a member not in the model: (2) IUS1.81/9.5 face mount, 1 on each side on Crawl space header at support 2, 3 1/2 x 15 1/4 sawn, for 425 lb D+L on each (support 2 with the member cut there: the left side, the worse; the right side 383 lb D+L).
Hanger J8-X3, off a member not in the model: (2) IUS1.81/9.5 face mount, 1 on each side on Crawl space header at support 3, 3 1/2 x 15 1/4 sawn, for 371 lb D+L on each (support 3 with the member cut there: the left side, the worse; the right side 326 lb D+L).
Hanger J8-X4, off a member not in the model: (2) IUS1.81/9.5 face mount, 1 on each side on Crawl space header at support 4, 3 1/2 x 15 1/4 sawn, for 303 lb D+L on each (support 4 with the member cut there: the left side, the worse; the right side 275 lb D+L).
Hanger J8-X5, off a member not in the model: (2) IUS1.81/9.5 face mount, 1 on each side on Crawl space header at support 5, 3 1/2 x 15 1/4 sawn, for 478 lb D+L on each (support 5 with the member cut there: the right side, the worse; the left side 318 lb D+L).

Lateral Bracing	Bracing Intervals	Comments
Top Edge (Lu)	continuous	braced by the sheathing
Bottom Edge (Lu)	9' o/c	used for C_L only where the bottom edge is in compression

Vertical Loads	Location	Trib. Width	Dead (0.90)	Floor Live (1.00)	Comments
0 - Self Weight (PLF)	0 to 41'	N/A	2.3	--	
1 - Uniform (PSF)	0 to 41'	24"	12	40	

Shear, Moment and Deflection

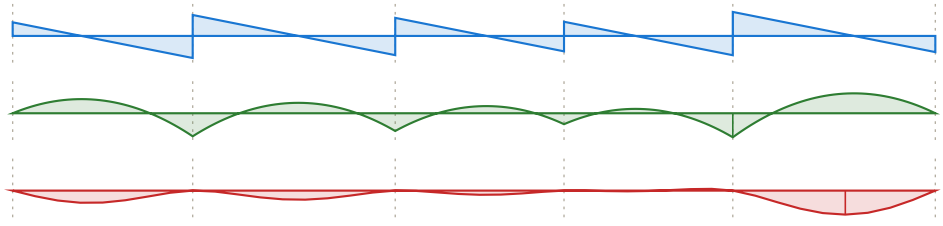

Shear (lbs)
D+L
max 572 @ 32'

Moment (ft-lbs)
D+L
max -840 @ 32'

Deflection (in)
D+L
0.054 in down @ 37'
limit 0.45 in on the span

Joists #9

PASSED

(1) 9 1/2" Weyerhaeuser TJI 110 @ 24" o.c.

Controls: Bearing 55% used

Level: Floor - 1st Level | Member type: Joist (Floor Joist) | Length: 54' 6" | 2018 IRC | 2018 NDS | ASD

Section adequacy 44.5% (capacity to spare)

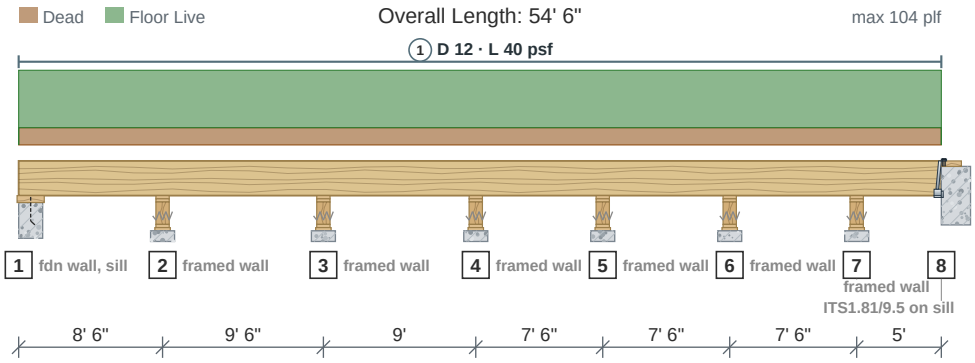

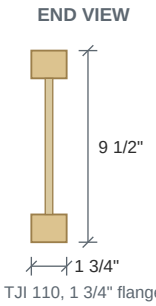

Drawing is conceptual. Locations are measured from the left end of the member; all dimensions are horizontal.

Design Results	Actual @ Location	Allowed	Result	LDF	Load Combination
Member Reaction (lbs)	1,074 @ 8' 6"	1,935 (3 1/2")	Passed (55% used)	--	D+L
Shear (lbs)	556 @ 8' 6"	1,220	Passed (46% used)	1.00	D+L
Moment (Ft-lbs)	885 @ 3' 3 1/4"	2,500	Passed (35% used)	1.00	D+L
Live Load Defl. (in)	0.042 @ 3' 7 11/16"	0.283	Passed (L/2,402)	--	L
Total Load Defl. (in)	0.056 @ 3' 7 11/16"	0.425	Passed (L/1,808)	--	D+L

- Deflection criteria (IRC Table R301.7): floor live alone L/360; roof live or snow alone L/240; dead plus live L/240.
- Member self weight of 2.3 plf is included.
- Calculations per NDS 2018 and Weyerhaeuser TJ-4000 / ICC-ES ESR-1153, ASD, every load combination with its own load duration factor.

	Bearing Length		Loads to Supports (lbs)			
Supports	**Provided**	**Required**	**Dead**	**Floor Live**	**Total**	**Load goes to**
1 @ 0	5 1/2"	--	86	262	**348**	Footing #66 (on the foundation wall, on its mud sill)
2 @ 8' 6"	3 1/2"	--	266	808	**1,074**	not linked (framed wall)
3 @ 18'	3 1/2"	--	244	743	**987**	Footing #67 (a framed wall down to the foundation)
4 @ 27'	3 1/2"	--	218	663	**881**	not linked (framed wall)
5 @ 34' 6"	3 1/2"	--	190	578	**769**	not linked (framed wall)
6 @ 42'	3 1/2"	--	203	617	**819**	not linked (framed wall)
7 @ 49' 6"	3 1/2"	--	182	553	**735**	not linked (framed wall)
8 @ 54' 6"	2" seat	--	45	136	**181**	not linked (hung from the mud sill, in an ITS1.81/9.5 top flange on the sill, 84%)

Total = the governing ASD combination at that support; the category columns are service loads.

Lateral Bracing	Bracing Intervals	Comments
Top Edge (Lu)	continuous	braced by the sheathing
Bottom Edge (Lu)	9' 6" o/c	used for C_L only where the bottom edge is in compression

Vertical Loads	Location	Trib. Width	Dead (0.90)	Floor Live (1.00)	Comments
0 - Self Weight (PLF)	0 to 54' 6"	N/A	2.3	--	
1 - Uniform (PSF)	0 to 54' 6"	24"	12	40	

Shear, Moment and Deflection

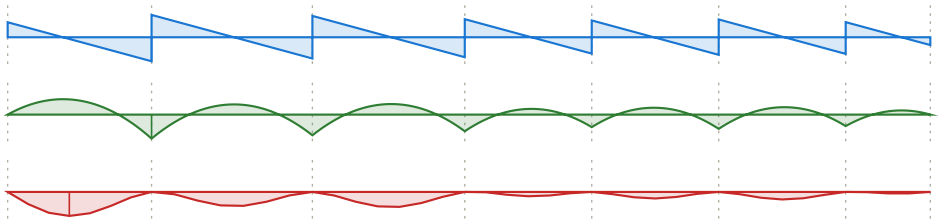

Shear (lbs)
D+L
max -556 @ 8' 6"

Moment (ft-lbs)
D+L
max -885 @ 8' 6"

Deflection (in)
D+L
0.037 in down @ 3' 7 11/16"
limit 0.425 in on the span

Joists #10

PASSED

(1) 9 1/2" Weyerhaeuser TJI 110 @ 24" o.c.

Controls: Bearing 54% used

Level: Floor - 1st Level | Member type: Joist (Floor Joist) | Length: 56' | 2018 IRC | 2018 NDS | ASD

Section adequacy 46.4% (capacity to spare)

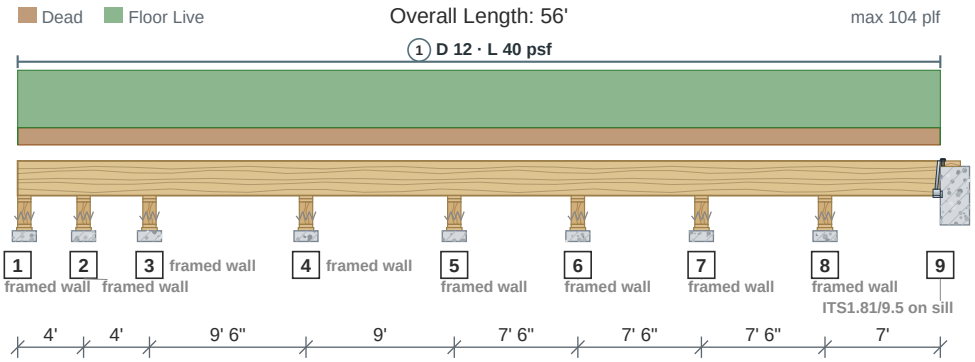

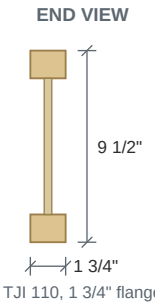

Drawing is conceptual. Locations are measured from the left end of the member; all dimensions are horizontal.

Design Results	Actual @ Location	Allowed	Result	LDF	Load Combination
Member Reaction (lbs)	1,037 @ 17' 6"	1,935 (3 1/2")	Passed (54% used)	--	D+L
Shear (lbs)	530 @ 17' 6"	1,220	Passed (43% used)	1.00	D+L
Moment (Ft-lbs)	842 @ 12' 7 3/16"	2,500	Passed (34% used)	1.00	D+L
Live Load Defl. (in)	0.04 @ 12' 7/8"	0.317	Passed (L/2,865)	--	L
Total Load Defl. (in)	0.053 @ 12' 7/8"	0.475	Passed (L/2,156)	--	D+L

- Deflection criteria (IRC Table R301.7): floor live alone L/360; roof live or snow alone L/240; dead plus live L/240.
- Member self weight of 2.3 plf is included.
- Calculations per NDS 2018 and Weyerhaeuser TJ-4000 / ICC-ES ESR-1153, ASD, every load combination with its own load duration factor.

	Bearing Length		Loads to Supports (lbs)			
Supports	**Provided**	**Required**	**Dead**	**Floor Live**	**Total**	**Load goes to**
1 @ 0	5 1/2"	--	49	148	**197**	Footing #69 (a framed wall down to the foundation)
2 @ 4'	3 1/2"	--	76	230	**306**	not linked (framed wall)
3 @ 8'	5 1/2"	--	205	622	**827**	not linked (framed wall)
4 @ 17' 6"	3 1/2"	--	257	780	**1,037**	not linked (framed wall)
5 @ 26' 6"	3 1/2"	--	214	650	**863**	not linked (framed wall)
6 @ 34'	3 1/2"	--	194	589	**782**	not linked (framed wall)
7 @ 41' 6"	3 1/2"	--	194	591	**786**	not linked (framed wall)
8 @ 49'	3 1/2"	--	214	651	**865**	Footing #70 (a framed wall down to the foundation)
9 @ 56'	2" seat	--	72	218	**290**	Footing #30 (hung from the mud sill, in an ITS1.81/9.5 top flange on the sill, 75%)

Total = the governing ASD combination at that support; the category columns are service loads.
Hanger J10-X1, off a member not in the model: (2) IUS1.81/9.5 face mount, 1 on each side on Crawl space header at support 2, 3 1/2 x 15 1/4 sawn, for 197 lb D+L on each (support 1).
Hanger J10-X2, off a member not in the model: (2) IUS1.81/9.5 face mount, 1 on each side on Crawl space header at support 3, 3 1/2 x 15 1/4 sawn, for 213 lb D+L on each (support 2 with the member cut there: the left side, the worse; the right side 60 lb D+L).
Hanger J10-X3, off a member not in the model: (2) IUS1.81/9.5 face mount, 1 on each side on Crawl space header at support 4, 3 1/2 x 15 1/4 sawn, for 399 lb D+L on each (support 3 with the member cut there: the right side, the worse; the left side 159 lb D+L).
Hanger J10-X4, off a member not in the model: (2) IUS1.81/9.5 face mount, 1 on each side on Crawl space header at support 5, 3 1/2 x 15 1/4 sawn, for 409 lb D+L on each (support 4 with the member cut there: the left side, the worse; the right side 386 lb D+L).
Hanger J10-X5, off a member not in the model: (2) IUS1.81/9.5 face mount, 1 on each side on Crawl space header at support 6, 3 1/2 x 15 1/4 sawn, for 367 lb D+L on each (support 5 with the member cut there: the left side, the worse; the right side 314 lb D+L).
Hanger J10-X6, off a member not in the model: (2) IUS1.81/9.5 face mount, 1 on each side on Crawl space header at support 7, 3 1/2 x 15 1/4 sawn, for 317 lb D+L on each (support 6 with the member cut there: the right side, the worse; the left side 305 lb D+L).
Hanger J10-X7, off a member not in the model: (2) IUS1.81/9.5 face mount, 1 on each side on Crawl space header at support 8, 3 1/2 x 15 1/4 sawn, for 318 lb D+L on each (support 7 with the member cut there: the left side, the worse; the right side 305 lb D+L).
Hanger J10-X8, off a member not in the model: (2) IUS1.81/9.5 face mount, 1 on each side on Crawl space header at support 9, 3 1/2 x 15 1/4 sawn, for 372 lb D+L on each (support 8 with the member cut there: the right side, the worse; the left side 314 lb D+L).

Lateral Bracing	Bracing Intervals	Comments
Top Edge (Lu)	continuous	braced by the sheathing
Bottom Edge (Lu)	9' 6" o/c	used for C_L only where the bottom edge is in compression

Vertical Loads	Location	Trib. Width	Dead (0.90)	Floor Live (1.00)	Comments
0 - Self Weight (PLF)	0 to 56'	N/A	2.3	--	
1 - Uniform (PSF)	0 to 56'	24"	12	40	

Joists #10 (continued)

Floor Joist | (1) 9 1/2" Weyerhaeuser TJI 110 @ 24" o.c.

Shear, Moment and Deflection

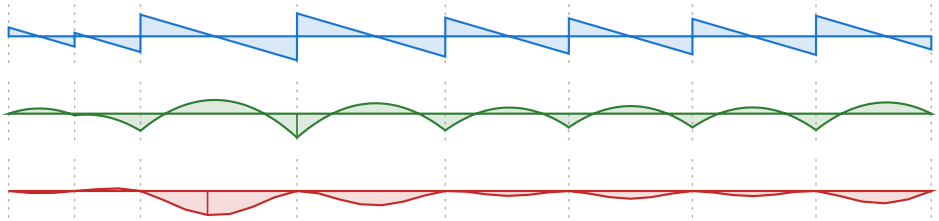

Shear (lbs)
D+L
max -530 @ 17' 6"

Moment (ft-lbs)
D+L
max -842 @ 17' 6"

Deflection (in)
D+L
0.034 in down @ 12' 7/8"
limit 0.475 in on the span

Joists #11

PASSED

(1) 9 1/2" Weyerhaeuser TJI 110 @ 24" o.c.

Controls: Bearing 53% used

Level: Floor - 1st Level | Member type: Joist (Floor Joist) | Length: 31' 6" | 2018 IRC | 2018 NDS | ASD

Section adequacy 46.6% (capacity to spare)

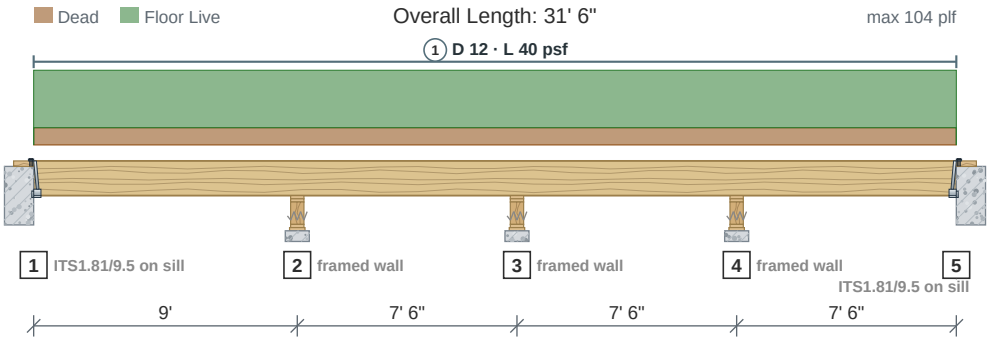

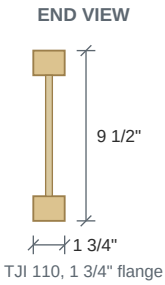

Drawing is conceptual. Locations are measured from the left end of the member; all dimensions are horizontal.

Design Results	Actual @ Location	Allowed	Result	LDF	Load Combination
Member Reaction (lbs)	1,033 @ 9'	1,935 (3 1/2")	Passed (53% used)	--	D+L
Shear (lbs)	572 @ 9'	1,220	Passed (47% used)	1.00	D+L
Moment (Ft-lbs)	842 @ 3' 7 1/2"	2,500	Passed (34% used)	1.00	D+L
Live Load Defl. (in)	0.055 @ 3' 9"	0.3	Passed (L/1,980)	--	L
Total Load Defl. (in)	0.072 @ 3' 9"	0.45	Passed (L/1,490)	--	D+L

- Deflection criteria (IRC Table R301.7): floor live alone L/360; roof live or snow alone L/240; dead plus live L/240.
- Member self weight of 2.3 plf is included.
- Calculations per NDS 2018 and Weyerhaeuser TJ-4000 / ICC-ES ESR-1153, ASD, every load combination with its own load duration factor.

	Bearing Length		Loads to Supports (lbs)			
Supports	**Provided**	**Required**	**Dead**	**Floor Live**	**Total**	**Load goes to**
1 @ 0	2" seat	--	95	290	**385**	not linked (hung from the mud sill, in an ITS1.81/9.5 top flange on the sill, 67%)
2 @ 9'	3 1/2"	--	256	777	**1,033**	not linked (framed wall)
3 @ 16' 6"	3 1/2"	--	173	525	**697**	not linked (framed wall)
4 @ 24'	3 1/2"	--	228	694	**922**	not linked (framed wall)
5 @ 31' 6"	2" seat	--	77	234	**311**	not linked (hung from the mud sill, in an ITS1.81/9.5 top flange on the sill, 73%)

Total = the governing ASD combination at that support; the category columns are service loads.
Hanger J11-X2, off a member not in the model: (2) IUS1.81/9.5 face mount, 1 on each side on Crawl space header at support 2, 3 1/2 x 15 1/4 sawn, for 478 lb D+L on each (support 2 with the member cut there: the left side, the worse; the right side 319 lb D+L).
Hanger J11-X3, off a member not in the model: (2) IUS1.81/9.5 face mount, 1 on each side on Crawl space header at support 3, 3 1/2 x 15 1/4 sawn, for 299 lb D+L on each (support 3 with the member cut there: the right side, the worse; the left side 275 lb D+L).
Hanger J11-X4, off a member not in the model: (2) IUS1.81/9.5 face mount, 1 on each side on Crawl space header at support 4, 3 1/2 x 15 1/4 sawn, for 399 lb D+L on each (support 4 with the member cut there: the right side, the worse; the left side 326 lb D+L).

Lateral Bracing	Bracing Intervals	Comments
Top Edge (Lu)	continuous	braced by the sheathing
Bottom Edge (Lu)	9' o/c	used for C_L only where the bottom edge is in compression

Vertical Loads	Location	Trib. Width	Dead (0.90)	Floor Live (1.00)	Comments
0 - Self Weight (PLF)	0 to 31' 6"	N/A	2.3	--	
1 - Uniform (PSF)	0 to 31' 6"	24"	12	40	

Shear, Moment and Deflection

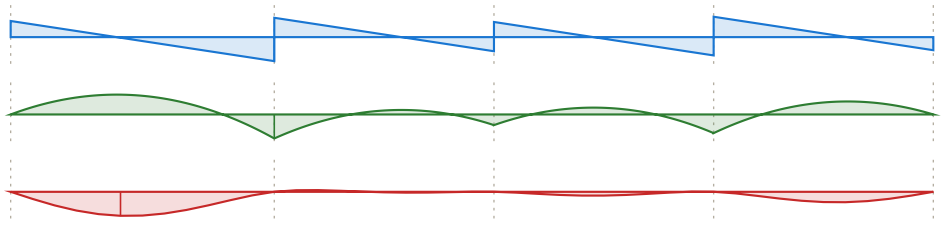

Shear (lbs)
D+L
max -572 @ 9'

Moment (ft-lbs)
D+L
max -842 @ 9'

Deflection (in)
D+L
0.054 in down @ 3' 9"
limit 0.45 in on the span

Joists #12

PASSED

(1) 9 1/2" Weyerhaeuser TJI 110 @ 24" o.c.

Controls: Bearing 50% used

Level: Floor - 1st Level | Member type: Joist (Floor Joist) | Length: 14' 6" | 2018 IRC | 2018 NDS | ASD

Section adequacy 50.2% (capacity to spare)

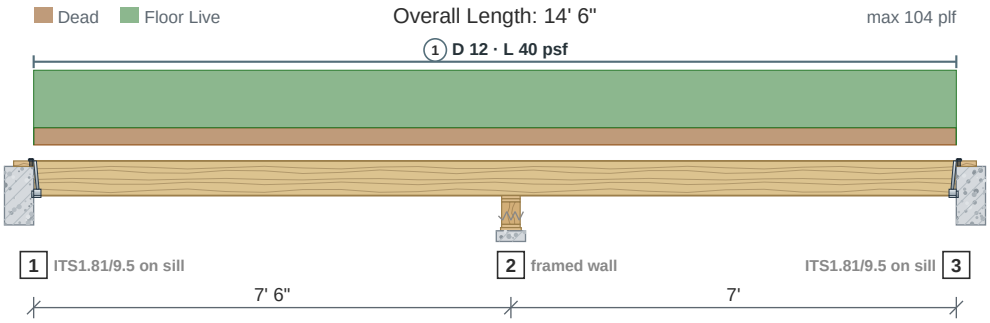

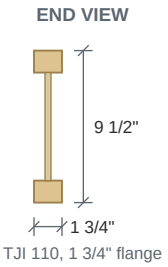

Drawing is conceptual. Locations are measured from the left end of the member; all dimensions are horizontal.

Design Results	Actual @ Location	Allowed	Result	LDF	Load Combination
Member Reaction (lbs)	964 @ 7' 6"	1,935 (3 1/2")	Passed (50% used)	--	D+L
Shear (lbs)	492 @ 7' 6"	1,220	Passed (40% used)	1.00	D+L
Moment (Ft-lbs)	701 @ 2' 10 13/16"	2,500	Passed (28% used)	1.00	D+L
Live Load Defl. (in)	0.028 @ 3' 2 9/16"	0.25	Passed (L/3,192)	--	L
Total Load Defl. (in)	0.037 @ 3' 2 9/16"	0.375	Passed (L/2,402)	--	D+L

- Deflection criteria (IRC Table R301.7): floor live alone L/360; roof live or snow alone L/240; dead plus live L/240.
- Member self weight of 2.3 plf is included.
- Calculations per NDS 2018 and Weyerhaeuser TJ-4000 / ICC-ES ESR-1153, ASD, every load combination with its own load duration factor.

	Bearing Length		Loads to Supports (lbs)			
Supports	**Provided**	**Required**	**Dead**	**Floor Live**	**Total**	**Load goes to**
1 @ 0	2" seat	--	76	230	**305**	Footing #32, Footing #33 (hung from the mud sill, in an ITS1.81/9.5 top flange on the sill, 73%)
2 @ 7' 6"	3 1/2"	--	239	726	**964**	not linked (framed wall)
3 @ 14' 6"	2" seat	--	67	205	**272**	Footing #31 (hung from the mud sill, in an ITS1.81/9.5 top flange on the sill, 76%)

Total = the governing ASD combination at that support; the category columns are service loads.

Lateral Bracing	Bracing Intervals	Comments
Top Edge (Lu)	continuous	braced by the sheathing
Bottom Edge (Lu)	7' 6" o/c	used for C_L only where the bottom edge is in compression

Vertical Loads	Location	Trib. Width	Dead (0.90)	Floor Live (1.00)	Comments
0 - Self Weight (PLF)	0 to 14' 6"	N/A	2.3	--	
1 - Uniform (PSF)	0 to 14' 6"	24"	12	40	

Shear, Moment and Deflection

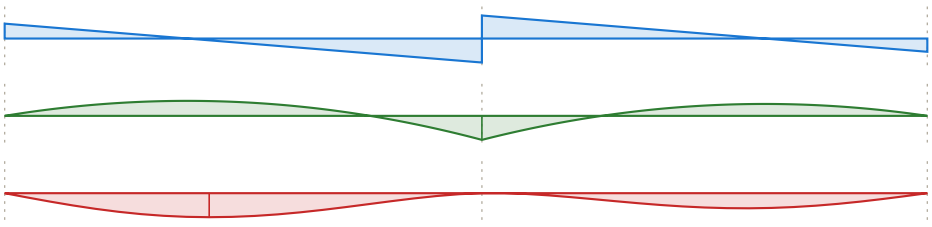

Shear (lbs)
D+L
max -492 @ 7' 6"

Moment (ft-lbs)
D+L
max -701 @ 7' 6"

Deflection (in)
D+L
0.022 in down @ 3' 2 9/16"
limit 0.375 in on the span

Joists #17

PASSED

(1) 9 1/2" Weyerhaeuser TJI 110 @ 24" o.c.

Controls: Bearing 3% used

Level: Floor - 1st Level | Member type: Joist (Floor Joist) | Length: 6" | 2018 IRC | 2018 NDS | ASD

Section adequacy 97.2% (capacity to spare)

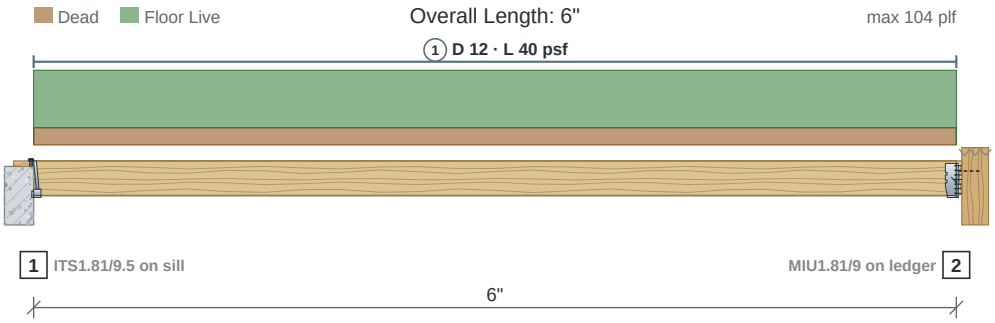

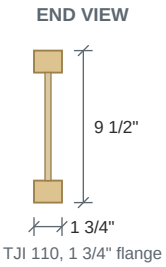

Drawing is conceptual. Locations are measured from the left end of the member; all dimensions are horizontal.

Design Results	Actual @ Location	Allowed	Result	LDF	Load Combination
Member Reaction (lbs)	27 @ 0	954 (2")	Passed (3% used)	--	D+L
Shear (lbs)	27 @ 0	1,220	Passed (2% used)	1.00	D+L
Moment (Ft-lbs)	3 @ 3"	2,500	Passed (0% used)	1.00	D+L
Live Load Defl. (in)	0 @ 3"	0.017	Passed (L/9999+)	--	L
Total Load Defl. (in)	0 @ 3"	0.025	Passed (L/9999+)	--	D+L

- Deflection criteria (IRC Table R301.7): floor live alone L/360; roof live or snow alone L/240; dead plus live L/240.
- Member self weight of 2.3 plf is included.
- Calculations per NDS 2018 and Weyerhaeuser TJ-4000 / ICC-ES ESR-1153, ASD, every load combination with its own load duration factor.

	Bearing Length		Loads to Supports (lbs)			
Supports	**Provided**	**Required**	**Dead**	**Floor Live**	**Total**	**Load goes to**
1 @ 0	2" seat	--	7	20	**27**	not linked (hung from the mud sill, in an ITS1.81/9.5 top flange on the sill, 98%)
2 @ 6"	2 1/2" seat	--	7	20	**27**	not linked (hung on the 2x10 DF-L No. 2 ledger, in an MIU1.81/9 face mount, 98%)

Total = the governing ASD combination at that support; the category columns are service loads.
Ledger at support 2 (LEDGER Joists #17-2): the 2x10 DF-L No. 2 ledger on 2x6 DF-L studs at 16 in., 1/2" sheathing between: (2) 1/2 x 4-1/2 lags at each stud (16 in. o.c.), from 2" below the ledger's top; 95% to spare at D+L (NDS 12.3, across the gap per AWC TR12; 11.3).

Lateral Bracing	Bracing Intervals	Comments
Top Edge (Lu)	continuous	braced by the sheathing
Bottom Edge (Lu)	6" o/c	used for C_L only where the bottom edge is in compression

Vertical Loads	Location	Trib. Width	Dead (0.90)	Floor Live (1.00)	Comments
0 - Self Weight (PLF)	0 to 6"	N/A	2.3	--	
1 - Uniform (PSF)	0 to 6"	24"	12	40	

Shear, Moment and Deflection

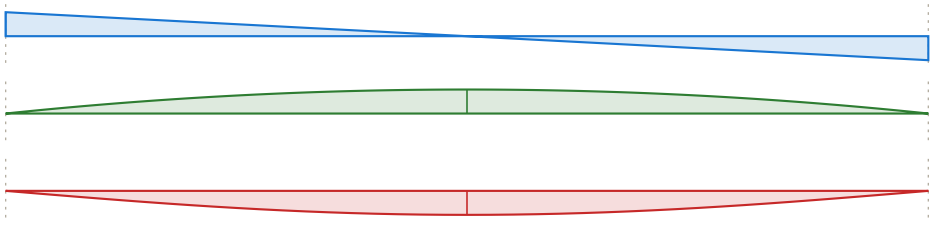

Shear (lbs)
D+L
max 27 @ 0

Moment (ft-lbs)
D+L
max 3 @ 3"

Deflection (in)
D+L
0 in down @ 3"
limit 0.025 in on the span

Column Bm #6-1

PASSED

(1) 6x10 DF-L No. 2 (5 1/2" x 9 1/2")

Level: Columns | Height: 20' 6" | Unbraced: 20' 6" (X), 10' (Y) | 2018 IRC | 2018 NDS | ASD

Controls: Compression 46% used
Section adequacy 53.9% (capacity to spare)

Design Results	Actual	Allowed	Result	LDF	Load Combination
Axial Load (lbs)	10,393	22,562	Passed (46% used)	1.15	D+S
Compression (psi)	198.9	431.8	Passed (46% used)	1.15	D+S

- Axial compression per NDS 2018 3.7 (ASD); self weight over the full height is included.
- Unbraced length about X pairs with the depth, about Y with the width.

Axial Loads	Location	Trib. Width	Dead (0.90)	Floor Live (1.00)	Snow (1.15)	Comments
1 - Axial (lb)	top	N/A	955.7	0	7,748	Linked from: Beam #6, Support 1
2 - Axial (lb)	top	N/A	506.4	1,421	--	Linked from: Beam #23, Support 1
3 - Axial (lb)	top	N/A	135.2	--	803.3	Linked from: Beam #20, Support 3

Supports	Load goes to
1 @ 0	SpotFtg Bm #6-1
2 @ 20' 6"	--

Column Bm #6-2

(1) 6x8 DF-L No. 2 (5 1/2" x 7 1/2")

Level: Columns | Height: 20' 6" | Unbraced: 20' 6" (X), 10' (Y) | 2018 IRC | 2018 NDS | ASD

PASSED

Controls: Compression 71% used

Section adequacy 28.8% (capacity to spare)

Design Results	Actual	Allowed	Result	LDF	Load Combination
Axial Load (lbs)	9,332	13,105	Passed (71% used)	1.15	D+S
Compression (psi)	226.2	317.7	Passed (71% used)	1.15	D+S

- Axial compression per NDS 2018 3.7 (ASD); self weight over the full height is included.
- Unbraced length about X pairs with the depth, about Y with the width.

Axial Loads	Location	Trib. Width	Dead (0.90)	Floor Live (1.00)	Snow (1.15)	Comments
1 - Axial (lb)	top	N/A	955.7	0	7,748	Linked from: Beam #6, Support 2
2 - Axial (lb)	top	N/A	435.1	1,208	--	Linked from: Beam #23, Support 2

Supports	Load goes to
1 @ 0	SpotFtg Bm #6-2
2 @ 20' 6"	--

Outlookers

PASSED

(1) 2x6 DF-L No. 2 (1 1/2" x 5 1/2") @ 16" o.c.

Controls: Moment 47% used

Level: Roof | Member type: Outlooker (Roof Rafter) | Length: 4' | 2018 IRC | 2018 NDS | ASD

Section adequacy 53.1% (capacity to spare)

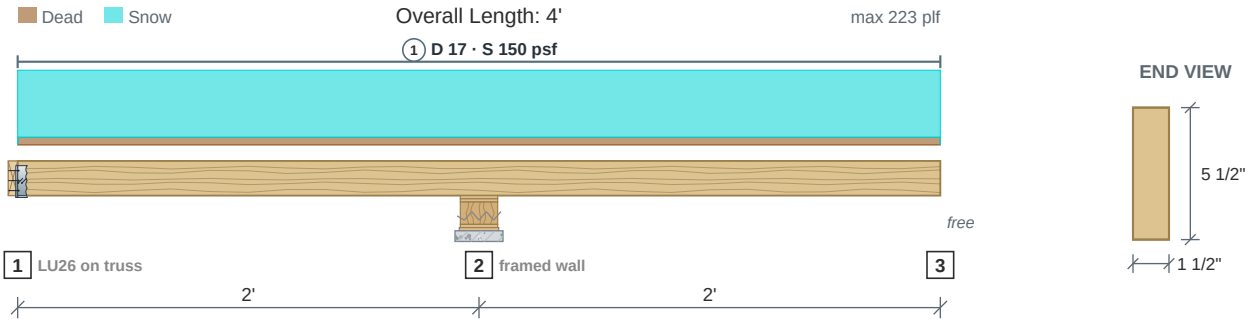

Drawing is conceptual. Locations are measured from the left end of the member; all dimensions are horizontal.

Design Results	Actual @ Location	Allowed	Result	LDF	Load Combination
Member Reaction (lbs)	898 @ 2'	3,633 (3 1/2")	Passed (25% used)	--	
Shear (lbs)	313 @ 1' 4 3/4"	1,138	Passed (28% used)	1.15	D+S
Neg Moment (Ft-lbs)	-449 @ 2'	958	Passed (47% used)	1.15	D+S
Live Load Defl. (in)	0.042 @ 4'	0.2	Passed (2L/1,155)	--	S
Total Load Defl. (in)	0.047 @ 4'	0.267	Passed (2L/1,029)	--	D+S

- Deflection criteria (IRC Table R301.7): floor live alone L/360; roof live or snow alone L/240; dead plus live L/180.
- Overhang deflection criteria: LL (2L/360) and TL (2L/180) -- a cantilever is limited on twice its length.
- Bending adjustment factors: CD = 1.15, CF = 1.30, Cr = 1.15, CL = 0.982 (D+S).
- Beam stability (NDS 3.3.3) governs bending: negative moment 449 lbf-ft, 0.00-2.00 ft, CL 0.982 (unbraced 2.0 ft).
- Member self weight of 1.9 plf is included.
- Calculations per NDS 2018, ASD, every load combination with its own load duration factor.

	Bearing Length		Loads to Supports (lbs)			
Supports	**Provided**	**Required**	**Dead**	**Snow**	**Total**	**Load goes to**
1 @ 0	1 1/2"	--	--	--	**0**	not linked (hung on the 2x6 DF-L No. 2 truss chord, in an LU26 face mount, 100%)
2 @ 2'	3 1/2"	9/16"	98	800	**898**	Header #2, Header #5, Header #12, Header #14, Header #15, Header #16, Header #21, Header #22, Beam #8, Footing #3, Footing #15, Footing #16, Footing #21, Footing #29, Footing #30, Footing #34, Footing #40, Footing #41, Footing #43, Footing #52, Footing #53, Footing #54, Footing #55, Beam #11, Header #39, Beam #15 (a framed wall down to the foundation)
3 @ 4'	--	--	--	--	--	free end (cantilever tip)

Total = the governing ASD combination at that support; the category columns are service loads.

Lateral Bracing	Bracing Intervals	Comments
Top Edge (Lu)	continuous	braced by the sheathing
Bottom Edge (Lu)	2' o/c	governs C_L here: the bottom edge is in compression

Vertical Loads	Location	Trib. Width	Dead (0.90)	Snow (1.15)	Comments
0 - Self Weight (PLF)	0 to 4'	N/A	1.9	--	
1 - Uniform (PSF)	0 to 4'	16"	17	150	

Shear, Moment and Deflection

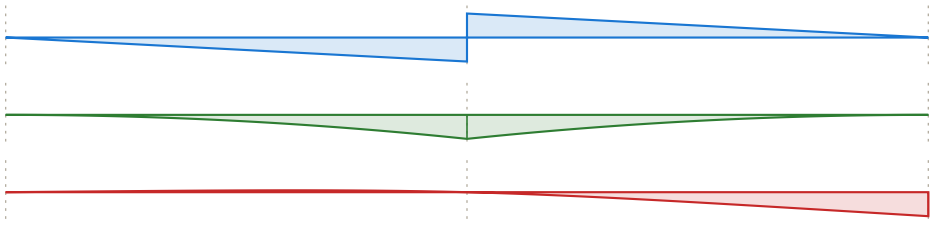

Shear (lbs)
D+S
max 449 @ 2'

Moment (ft-lbs)
D+S
max -449 @ 2'

Deflection (in)
D+S
0.047 in down @ 4'
limit 0.267 in on 2L (cantilever)

Footing #1

PASSED

Continuous Footing 1' 4" wide x 10" deep -- Long.(2) #4 Bars, Transv:#4 @10(in) O.C.

Level: Foundation | f'c 3,000 psi | rebar Fy 60 ksi | soil 1,500 psf | Concrete stem wall 6" | ACI 318-14

Controls: Depth Above Bars 89% used

Adequacy 14.3% (capacity to spare)

WHAT LOADS IT

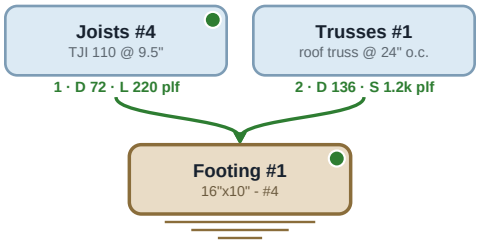

SECTION

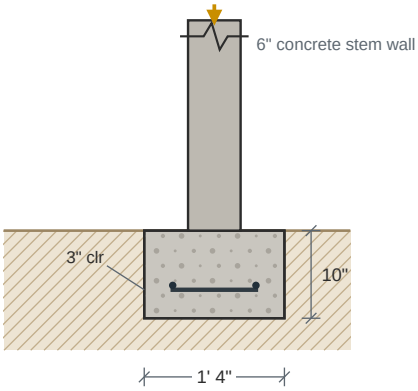

PLAN -- BOTTOM MAT

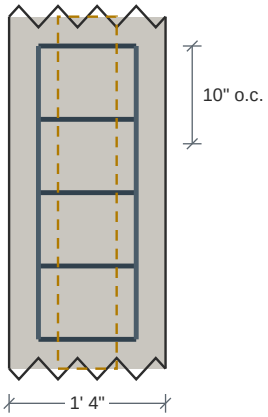

Long.(2) #4 Bars, Transv:#4 @10(in) O.C.

Carrying: Dead 208 plf Floor Live 220 plf Snow 1,200 plf

Design Results	Actual	Allowed	Result	Method	Load Combination
Soil Bearing Pressure (psf)	1,286	1,500	Passed (86% used)	ASD	D+S
One-Way Shear (lbs)	0	6,655	Passed (0% used)	LRFD	1.2D+1.6S+L
Moment (ft-lbs)	156	7,036	Passed (2% used)	LRFD	1.2D+1.6S+L
Depth Above Bars (in)	6	7	Passed (89% used)	code	ACI 318-14 13.3.1.2

Footing Specification

as entered on the footing, and the mat the check selected

Geometry	
Stem wall type	Concrete
Footing width	1' 4"
Footing depth	10"
Stem wall width	6"
Stem wall height	24"
Stem wall density	145 pcf
Stem wall offset	0

Footing Properties	
Steel yield strength	60,000 psi
Concrete strength	3,000 psi
Soil bearing pressure	1,500 psf
Concrete density	145 pcf
Top reinf. cover	3"
Bottom reinf. cover	3"
Side reinf. cover	3"
Aggregate diameter	3/4"

Soil Properties	
Soil depth above footing	0
Soil density	140 pcf
Soil cohesion	0 psf
Friction angle	30°
Water level	20'

Reinforcement	
Bottom mat	Long.(2) #4 Bars, Transv:#4 @10(in) O.C.
Transverse	#4 @ 10" o.c.
Longitudinal	(2) #4
Selected for	moment and minimum steel
Dowels	(3), bar size not set
Plain concrete (no reinforcing)	No
Override rebar	No
Include water level	No
Allow bearing pressure increase	No

- Soil bearing is checked at service level (ASD) and includes the footing's own weight; shear, moment and crushing at strength level (LRFD), ACI 318-14, loads combined to ASCE 7-16.
- Reinforcement is selected for the moment and for minimum steel (ACI 318-14: 0.0018 Ag for Grade 60), at no more than 3h or 18 in.

Applied Loads	Location	Trib. Width	Dead (0.90)	Floor Live (1.00)	Snow (1.15)	Comments
1 - Uniform (PLF)	--	N/A	72.3	220	--	Linked from: Joists #4, Support 1
2 - Uniform (PLF)	--	N/A	136	--	1,200	Linked from: Trusses #1, Support 2

Footing #2

PASSED

Continuous Footing 1' 4" wide x 10" deep -- Long.(2) #4 Bars, Transv:#4 @10(in) O.C.

Level: Foundation | f'c 3,000 psi | rebar Fy 60 ksi | soil 1,500 psf | Concrete stem wall 6" | ACI 318-14

Controls: Depth Above Bars 89% used

Adequacy 14.3% (capacity to spare)

WHAT LOADS IT

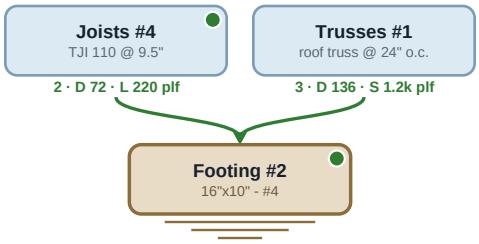

SECTION

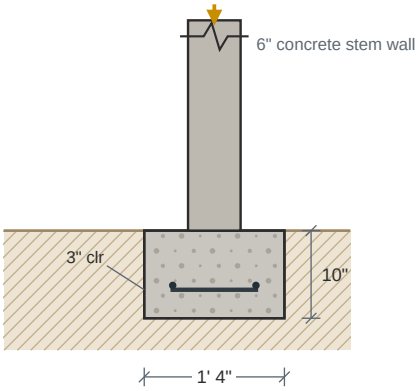

PLAN -- BOTTOM MAT

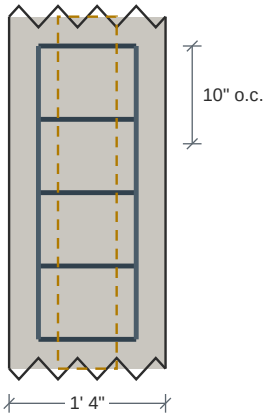

Long.(2) #4 Bars, Transv:#4 @10(in) O.C.

Carrying: Dead 208 plf Floor Live 220 plf Snow 1,200 plf

Design Results	Actual	Allowed	Result	Method	Load Combination
Soil Bearing Pressure (psf)	1,286	1,500	Passed (86% used)	ASD	D+S
One-Way Shear (lbs)	0	6,655	Passed (0% used)	LRFD	1.2D+1.6S+L
Moment (ft-lbs)	156	7,036	Passed (2% used)	LRFD	1.2D+1.6S+L
Depth Above Bars (in)	6	7	Passed (89% used)	code	ACI 318-14 13.3.1.2

Footing Specification

as entered on the footing, and the mat the check selected

Geometry	
Stem wall type	Concrete
Footing width	1' 4"
Footing depth	10"
Stem wall width	6"
Stem wall height	24"
Stem wall density	145 pcf
Stem wall offset	0

Footing Properties	
Steel yield strength	60,000 psi
Concrete strength	3,000 psi
Soil bearing pressure	1,500 psf
Concrete density	145 pcf
Top reinf. cover	3"
Bottom reinf. cover	3"
Side reinf. cover	3"
Aggregate diameter	3/4"

Soil Properties	
Soil depth above footing	0
Soil density	140 pcf
Soil cohesion	0 psf
Friction angle	30°
Water level	20'

Reinforcement	
Bottom mat	Long.(2) #4 Bars, Transv:#4 @10(in) O.C.
Transverse	#4 @ 10" o.c.
Longitudinal	(2) #4
Selected for	moment and minimum steel
Dowels	(3), bar size not set
Plain concrete (no reinforcing)	No
Override rebar	No
Include water level	No
Allow bearing pressure increase	No

- Soil bearing is checked at service level (ASD) and includes the footing's own weight; shear, moment and crushing at strength level (LRFD), ACI 318-14, loads combined to ASCE 7-16.
- Reinforcement is selected for the moment and for minimum steel (ACI 318-14: 0.0018 Ag for Grade 60), at no more than 3h or 18 in.

Applied Loads	Location	Trib. Width	Dead (0.90)	Floor Live (1.00)	Snow (1.15)	Comments
1 - Uniform (PLF)	--	N/A	72.3	220	--	Linked from: Joists #4, Support 2
2 - Uniform (PLF)	--	N/A	136	--	1,200	Linked from: Trusses #1, Support 3

Footing #3

PASSED

Continuous Footing 1' 4" wide x 10" deep -- Long.(2) #4 Bars, Transv:#4 @10(in) O.C.

Level: Foundation | f'c 3,000 psi | rebar Fy 60 ksi | soil 1,500 psf | Concrete stem wall 6" | ACI 318-14

Controls: Depth Above Bars 89% used

Adequacy 48.4% (capacity to spare)

WHAT LOADS IT

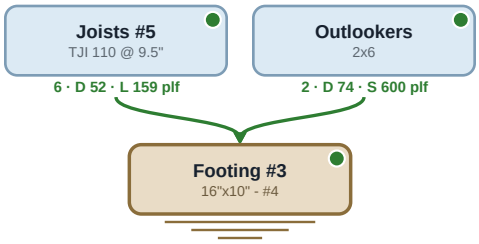

SECTION

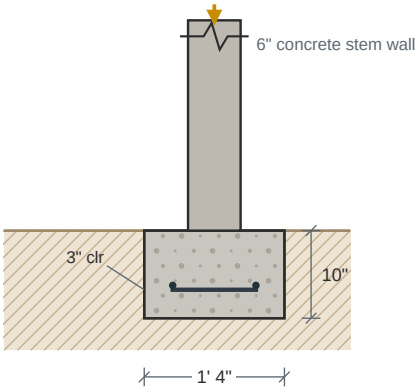

PLAN -- BOTTOM MAT

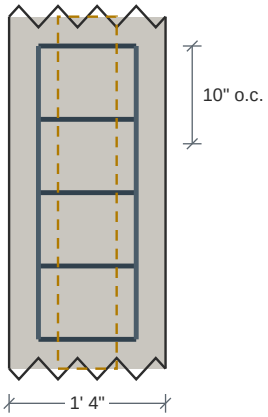

Long.(2) #4 Bars, Transv:#4 @10(in) O.C.

Carrying: Dead 126 plf Snow 600 plf Floor Live 159 plf

Design Results	Actual	Allowed	Result	Method	Load Combination
Soil Bearing Pressure (psf)	774	1,500	Passed (52% used)	ASD	D+S
One-Way Shear (lbs)	0	6,655	Passed (0% used)	LRFD	1.2D+1.6S+L
Moment (ft-lbs)	83	7,036	Passed (1% used)	LRFD	1.2D+1.6S+L
Depth Above Bars (in)	6	7	Passed (89% used)	code	ACI 318-14 13.3.1.2

Footing Specification

as entered on the footing, and the mat the check selected

Geometry	
Stem wall type	Concrete
Footing width	1' 4"
Footing depth	10"
Stem wall width	6"
Stem wall height	24"
Stem wall density	145 pcf
Stem wall offset	0

Footing Properties	
Steel yield strength	60,000 psi
Concrete strength	3,000 psi
Soil bearing pressure	1,500 psf
Concrete density	145 pcf
Top reinf. cover	3"
Bottom reinf. cover	3"
Side reinf. cover	3"
Aggregate diameter	3/4"

Soil Properties	
Soil depth above footing	0
Soil density	140 pcf
Soil cohesion	0 psf
Friction angle	30°
Water level	20'

Reinforcement	
Bottom mat	Long.(2) #4 Bars, Transv:#4 @10(in) O.C.
Transverse	#4 @ 10" o.c.
Longitudinal	(2) #4
Selected for	moment and minimum steel
Dowels	(3), bar size not set
Plain concrete (no reinforcing)	No
Override rebar	No
Include water level	No
Allow bearing pressure increase	No

- Soil bearing is checked at service level (ASD) and includes the footing's own weight; shear, moment and crushing at strength level (LRFD), ACI 318-14, loads combined to ASCE 7-16.
- Reinforcement is selected for the moment and for minimum steel (ACI 318-14: 0.0018 Ag for Grade 60), at no more than 3h or 18 in.

Applied Loads	Location	Trib. Width	Dead (0.90)	Floor Live (1.00)	Snow (1.15)	Comments
1 - Uniform (PLF)	--	N/A	73.6	--	600	Linked from: Outlookers, Support 2
2 - Uniform (PLF)	--	N/A	52.3	159.2	--	Linked from: Joists #5, Support 6

Footing #4

PASSED

Continuous Footing 2' wide x 10" deep -- Long.(3) #4 Bars, Transv:#4 @10(in) O.C.

Level: Foundation | f'c 3,000 psi | rebar Fy 60 ksi | soil 1,500 psf | Concrete stem wall 6" | ACI 318-14

Controls: Depth Above Bars 89% used

Adequacy 25.9% (capacity to spare)

WHAT LOADS IT

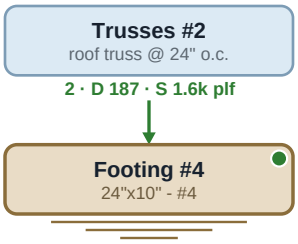

SECTION

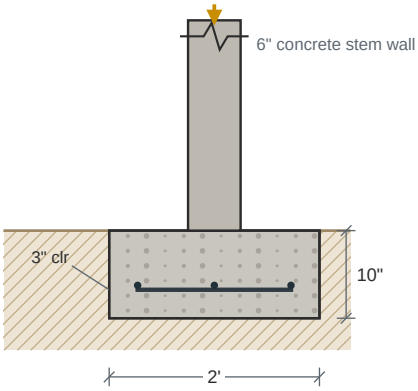

PLAN -- BOTTOM MAT

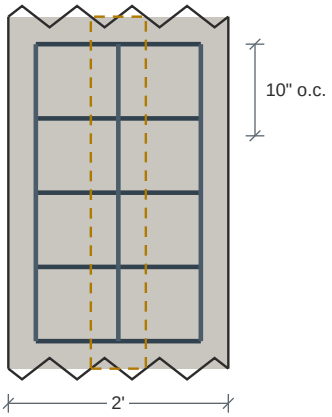

Long.(3) #4 Bars, Transv:#4 @10(in) O.C.

Carrying: Dead 187 plf Snow 1,650 plf

Design Results	Actual	Allowed	Result	Method	Load Combination
Soil Bearing Pressure (psf)	1,112	1,500	Passed (74% used)	ASD	D+S
One-Way Shear (lbs)	269	6,655	Passed (4% used)	LRFD	1.2D+1.6S+L
Moment (ft-lbs)	403	7,036	Passed (6% used)	LRFD	1.2D+1.6S+L
Depth Above Bars (in)	6	7	Passed (89% used)	code	ACI 318-14 13.3.1.2

Footing Specification

as entered on the footing, and the mat the check selected

Geometry	
Stem wall type	Concrete
Footing width	2'
Footing depth	10"
Stem wall width	6"
Stem wall height	24"
Stem wall density	145 pcf
Stem wall offset	0

Footing Properties	
Steel yield strength	60,000 psi
Concrete strength	3,000 psi
Soil bearing pressure	1,500 psf
Concrete density	145 pcf
Top reinf. cover	3"
Bottom reinf. cover	3"
Side reinf. cover	3"
Aggregate diameter	3/4"

Soil Properties	
Soil depth above footing	0
Soil density	140 pcf
Soil cohesion	0 psf
Friction angle	30°
Water level	20'

Reinforcement	
Bottom mat	Long.(3) #4 Bars, Transv:#4 @10(in) O.C.
Transverse	#4 @ 10" o.c.
Longitudinal	(3) #4
Selected for	moment and minimum steel
Dowels	(3), bar size not set
Plain concrete (no reinforcing)	No
Override rebar	No
Include water level	No
Allow bearing pressure increase	No

- Soil bearing is checked at service level (ASD) and includes the footing's own weight; shear, moment and crushing at strength level (LRFD), ACI 318-14, loads combined to ASCE 7-16.
- Reinforcement is selected for the moment and for minimum steel (ACI 318-14: 0.0018 Ag for Grade 60), at no more than 3h or 18 in.

Applied Loads	Location	Trib. Width	Dead (0.90)	Snow (1.15)	Comments
1 - Uniform (PLF)	--	N/A	187	1,650	Linked from: Trusses #2, Support 2

Footing #5

PASSED

Continuous Footing 2' wide x 10" deep -- Long.(3) #4 Bars, Transv:#4 @10(in) O.C.

Level: Foundation | f'c 3,000 psi | rebar Fy 60 ksi | soil 1,500 psf | Concrete stem wall 6" | ACI 318-14

Controls: Depth Above Bars 89% used

Adequacy 25.9% (capacity to spare)

WHAT LOADS IT

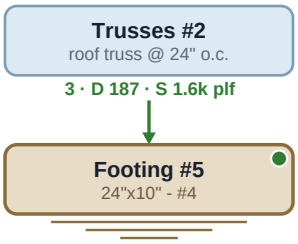

SECTION

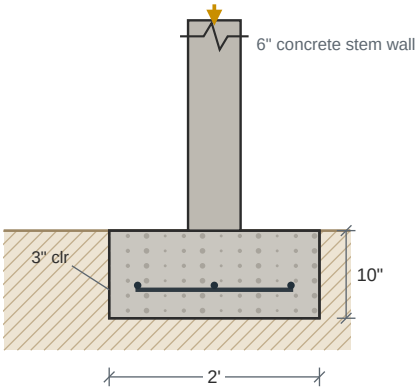

PLAN -- BOTTOM MAT

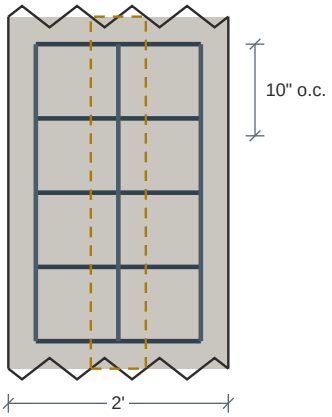

Long.(3) #4 Bars, Transv:#4 @10(in) O.C.

Carrying: Dead 187 plf Snow 1,650 plf

Design Results	Actual	Allowed	Result	Method	Load Combination
Soil Bearing Pressure (psf)	1,112	1,500	Passed (74% used)	ASD	D+S
One-Way Shear (lbs)	269	6,655	Passed (4% used)	LRFD	1.2D+1.6S+L
Moment (ft-lbs)	403	7,036	Passed (6% used)	LRFD	1.2D+1.6S+L
Depth Above Bars (in)	6	7	Passed (89% used)	code	ACI 318-14 13.3.1.2

Footing Specification

as entered on the footing, and the mat the check selected

Geometry	
Stem wall type	Concrete
Footing width	2'
Footing depth	10"
Stem wall width	6"
Stem wall height	24"
Stem wall density	145 pcf
Stem wall offset	0

Footing Properties	
Steel yield strength	60,000 psi
Concrete strength	3,000 psi
Soil bearing pressure	1,500 psf
Concrete density	145 pcf
Top reinf. cover	3"
Bottom reinf. cover	3"
Side reinf. cover	3"
Aggregate diameter	3/4"

Soil Properties	
Soil depth above footing	0
Soil density	140 pcf
Soil cohesion	0 psf
Friction angle	30°
Water level	20'

Reinforcement	
Bottom mat	Long.(3) #4 Bars, Transv:#4 @10(in) O.C.
Transverse	#4 @ 10" o.c.
Longitudinal	(3) #4
Selected for	moment and minimum steel
Dowels	(3), bar size not set
Plain concrete (no reinforcing)	No
Override rebar	No
Include water level	No
Allow bearing pressure increase	No

- Soil bearing is checked at service level (ASD) and includes the footing's own weight; shear, moment and crushing at strength level (LRFD), ACI 318-14, loads combined to ASCE 7-16.
- Reinforcement is selected for the moment and for minimum steel (ACI 318-14: 0.0018 Ag for Grade 60), at no more than 3h or 18 in.

Applied Loads	Location	Trib. Width	Dead (0.90)	Snow (1.15)	Comments
1 - Uniform (PLF)	--	N/A	187	1,650	Linked from: Trusses #2, Support 3

Footing #6

PASSED

Continuous Footing 1' 4" wide x 10" deep -- Long.(2) #4 Bars, Transv:#4 @10(in) O.C.

Level: Foundation | f'c 3,000 psi | rebar Fy 60 ksi | soil 1,500 psf | Wood stem wall 5 1/2" | ACI 318-14

Controls: Depth Above Bars 89% used

Adequacy 14.3% (capacity to spare)

WHAT LOADS IT

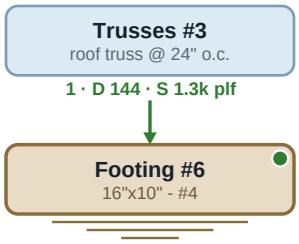

SECTION

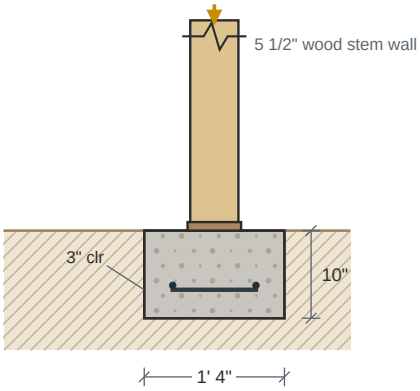

PLAN -- BOTTOM MAT

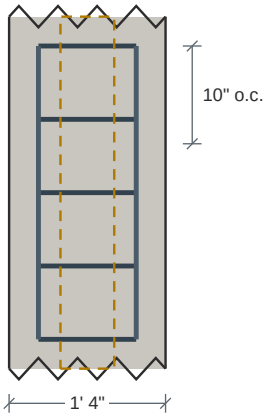

Long.(2) #4 Bars, Transv:#4 @10(in) O.C.

Carrying: Dead 144 plf Snow 1,275 plf

Design Results	Actual	Allowed	Result	Method	Load Combination
Soil Bearing Pressure (psf)	1,285	1,500	Passed (86% used)	ASD	D+S
One-Way Shear (lbs)	0	6,655	Passed (0% used)	LRFD	1.2D+1.6S+L
Moment (ft-lbs)	253	7,036	Passed (4% used)	LRFD	1.2D+1.6S+L
Depth Above Bars (in)	6	7	Passed (89% used)	code	ACI 318-14 13.3.1.2

Footing Specification

as entered on the footing, and the mat the check selected

Geometry	
Stem wall type	Wood
Footing width	1' 4"
Footing depth	10"
Stem wall width	5 1/2"
Stem wall height	24"
Stem wall density	145 pcf
Stem wall offset	0

Footing Properties	
Steel yield strength	60,000 psi
Concrete strength	3,000 psi
Soil bearing pressure	1,500 psf
Concrete density	145 pcf
Top reinf. cover	3"
Bottom reinf. cover	3"
Side reinf. cover	3"
Aggregate diameter	3/4"

Soil Properties	
Soil depth above footing	0
Soil density	140 pcf
Soil cohesion	0 psf
Friction angle	30°
Water level	20'

Reinforcement	
Bottom mat	Long.(2) #4 Bars, Transv:#4 @10(in) O.C.
Transverse	#4 @ 10" o.c.
Longitudinal	(2) #4
Selected for	moment and minimum steel
Dowels	(3), bar size not set
Plain concrete (no reinforcing)	No
Override rebar	No
Include water level	No
Allow bearing pressure increase	No

- Soil bearing is checked at service level (ASD) and includes the footing's own weight; shear, moment and crushing at strength level (LRFD), ACI 318-14, loads combined to ASCE 7-16.
- Reinforcement is selected for the moment and for minimum steel (ACI 318-14: 0.0018 Ag for Grade 60), at no more than 3h or 18 in.

Applied Loads	Location	Trib. Width	Dead (0.90)	Snow (1.15)	Comments
1 - Uniform (PLF)	--	N/A	144.5	1,275	Linked from: Trusses #3, Support 1

Footing #7

PASSED

Continuous Footing 1' 4" wide x 10" deep -- Long.(2) #4 Bars, Transv:#4 @10(in) O.C.

Level: Foundation | f'c 3,000 psi | rebar Fy 60 ksi | soil 1,500 psf | Wood stem wall 3 1/2" | ACI 318-14

Controls: Depth Above Bars 89% used

Adequacy 16.7% (capacity to spare)

WHAT LOADS IT

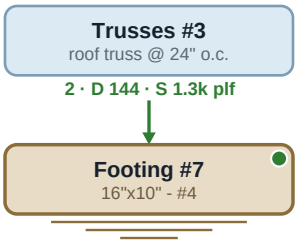

SECTION

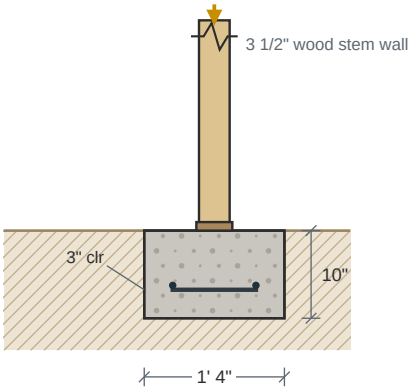

PLAN -- BOTTOM MAT

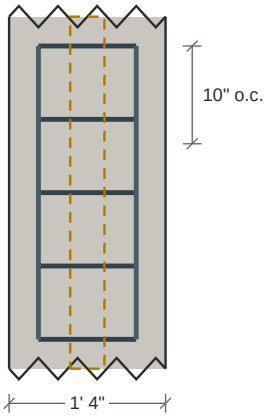

Long.(2) #4 Bars, Transv:#4 @10(in) O.C.

Carrying: Dead 144 plf Snow 1,275 plf

Design Results	Actual	Allowed	Result	Method	Load Combination
Soil Bearing Pressure (psf)	1,249	1,500	Passed (83% used)	ASD	D+S
One-Way Shear (lbs)	0	6,655	Passed (0% used)	LRFD	1.2D+1.6S+L
Moment (ft-lbs)	293	7,036	Passed (4% used)	LRFD	1.2D+1.6S+L
Depth Above Bars (in)	6	7	Passed (89% used)	code	ACI 318-14 13.3.1.2

Footing Specification

as entered on the footing, and the mat the check selected

Geometry	
Stem wall type	Wood
Footing width	1' 4"
Footing depth	10"
Stem wall width	3 1/2"
Stem wall height	24"
Stem wall density	145 pcf
Stem wall offset	0

Footing Properties	
Steel yield strength	60,000 psi
Concrete strength	3,000 psi
Soil bearing pressure	1,500 psf
Concrete density	145 pcf
Top reinf. cover	3"
Bottom reinf. cover	3"
Side reinf. cover	3"
Aggregate diameter	3/4"

Soil Properties	
Soil depth above footing	0
Soil density	140 pcf
Soil cohesion	0 psf
Friction angle	30°
Water level	20'

Reinforcement	
Bottom mat	Long.(2) #4 Bars, Transv:#4 @10(in) O.C.
Transverse	#4 @ 10" o.c.
Longitudinal	(2) #4
Selected for	moment and minimum steel
Dowels	(3), bar size not set
Plain concrete (no reinforcing)	No
Override rebar	No
Include water level	No
Allow bearing pressure increase	No

- Soil bearing is checked at service level (ASD) and includes the footing's own weight; shear, moment and crushing at strength level (LRFD), ACI 318-14, loads combined to ASCE 7-16.
- Reinforcement is selected for the moment and for minimum steel (ACI 318-14: 0.0018 Ag for Grade 60), at no more than 3h or 18 in.

Applied Loads	Location	Trib. Width	Dead (0.90)	Snow (1.15)	Comments
1 - Uniform (PLF)	--	N/A	144.5	1,275	Linked from: Trusses #3, Support 2

Footing #8

PASSED

Continuous Footing 2' wide x 10" deep -- Long.(3) #4 Bars, Transv:#4 @10(in) O.C.

Level: Foundation | f'c 3,000 psi | rebar Fy 60 ksi | soil 1,500 psf | Concrete stem wall 6" | ACI 318-14

Controls: Depth Above Bars 89% used

Adequacy 25.9% (capacity to spare)

WHAT LOADS IT

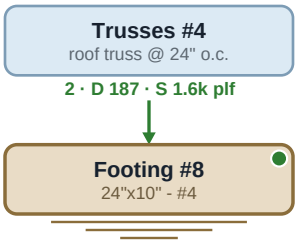

SECTION

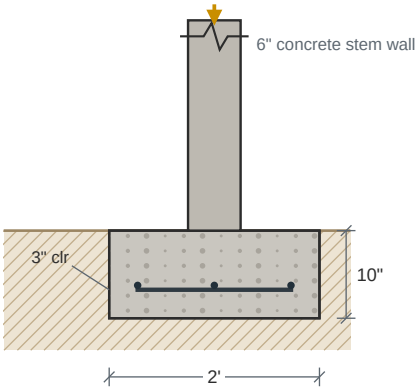

PLAN -- BOTTOM MAT

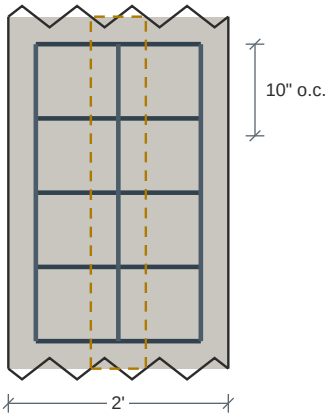

Long.(3) #4 Bars, Transv:#4 @10(in) O.C.

Carrying: Dead 187 plf Snow 1,650 plf

Design Results	Actual	Allowed	Result	Method	Load Combination
Soil Bearing Pressure (psf)	1,112	1,500	Passed (74% used)	ASD	D+S
One-Way Shear (lbs)	269	6,655	Passed (4% used)	LRFD	1.2D+1.6S+L
Moment (ft-lbs)	403	7,036	Passed (6% used)	LRFD	1.2D+1.6S+L
Depth Above Bars (in)	6	7	Passed (89% used)	code	ACI 318-14 13.3.1.2

Footing Specification

as entered on the footing, and the mat the check selected

Geometry	
Stem wall type	Concrete
Footing width	2'
Footing depth	10"
Stem wall width	6"
Stem wall height	24"
Stem wall density	145 pcf
Stem wall offset	0

Footing Properties	
Steel yield strength	60,000 psi
Concrete strength	3,000 psi
Soil bearing pressure	1,500 psf
Concrete density	145 pcf
Top reinf. cover	3"
Bottom reinf. cover	3"
Side reinf. cover	3"
Aggregate diameter	3/4"

Soil Properties	
Soil depth above footing	0
Soil density	140 pcf
Soil cohesion	0 psf
Friction angle	30°
Water level	20'

Reinforcement	
Bottom mat	Long.(3) #4 Bars, Transv:#4 @10(in) O.C.
Transverse	#4 @ 10" o.c.
Longitudinal	(3) #4
Selected for	moment and minimum steel
Dowels	(3), bar size not set
Plain concrete (no reinforcing)	No
Override rebar	No
Include water level	No
Allow bearing pressure increase	No

- Soil bearing is checked at service level (ASD) and includes the footing's own weight; shear, moment and crushing at strength level (LRFD), ACI 318-14, loads combined to ASCE 7-16.
- Reinforcement is selected for the moment and for minimum steel (ACI 318-14: 0.0018 Ag for Grade 60), at no more than 3h or 18 in.

Applied Loads	Location	Trib. Width	Dead (0.90)	Snow (1.15)	Comments
1 - Uniform (PLF)	--	N/A	187	1,650	Linked from: Trusses #4, Support 2

Footing #9

PASSED

Continuous Footing 1' 4" wide x 10" deep -- Long.(2) #4 Bars, Transv:#4 @10(in) O.C.

Level: Foundation | f'c 3,000 psi | rebar Fy 60 ksi | soil 1,500 psf | Concrete stem wall 6" | ACI 318-14

Controls: Depth Above Bars 89% used

Adequacy 84.7% (capacity to spare)

SECTION

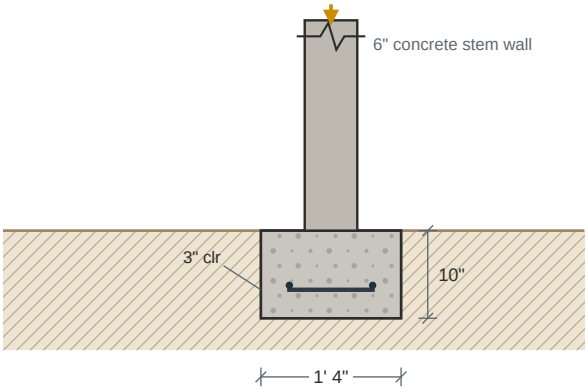

PLAN -- BOTTOM MAT

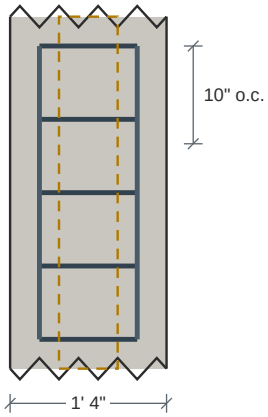

Long.(2) #4 Bars, Transv:#4 @10(in) O.C.

Design Results	Actual	Allowed	Result	Method	Load Combination
Soil Bearing Pressure (psf)	230	1,500	Passed (15% used)	ASD	D
One-Way Shear (lbs)	0	6,655	Passed (0% used)	LRFD	1.4D
Moment (ft-lbs)	0	7,036	Passed (0% used)	LRFD	1.4D
Depth Above Bars (in)	6	7	Passed (89% used)	code	ACI 318-14 13.3.1.2

Footing Specification

as entered on the footing, and the mat the check selected

Geometry	
Stem wall type	Concrete
Footing width	1' 4"
Footing depth	10"
Stem wall width	6"
Stem wall height	24"
Stem wall density	145 pcf
Stem wall offset	0

Footing Properties	
Steel yield strength	60,000 psi
Concrete strength	3,000 psi
Soil bearing pressure	1,500 psf
Concrete density	145 pcf
Top reinf. cover	3"
Bottom reinf. cover	3"
Side reinf. cover	3"
Aggregate diameter	3/4"

Soil Properties	
Soil depth above footing	0
Soil density	140 pcf
Soil cohesion	0 psf
Friction angle	30°
Water level	20'

Reinforcement	
Bottom mat	Long.(2) #4 Bars, Transv:#4 @10(in) O.C.
Transverse	#4 @ 10" o.c.
Longitudinal	(2) #4
Selected for	moment and minimum steel
Dowels	(3), bar size not set
Plain concrete (no reinforcing)	No
Override rebar	No
Include water level	No
Allow bearing pressure increase	No

- Soil bearing is checked at service level (ASD) and includes the footing's own weight; shear, moment and crushing at strength level (LRFD), ACI 318-14, loads combined to ASCE 7-16.
- Reinforcement is selected for the moment and for minimum steel (ACI 318-14: 0.0018 Ag for Grade 60), at no more than 3h or 18 in.

Footing #10

PASSED

Continuous Footing 1' 4" wide x 10" deep -- Long.(2) #4 Bars, Transv:#4 @10(in) O.C.

Level: Foundation | f'c 3,000 psi | rebar Fy 60 ksi | soil 1,500 psf | Concrete stem wall 6" | ACI 318-14

Controls: Depth Above Bars 89% used

Adequacy 74.1% (capacity to spare)

WHAT LOADS IT

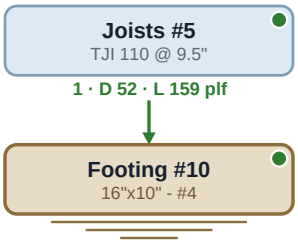

SECTION

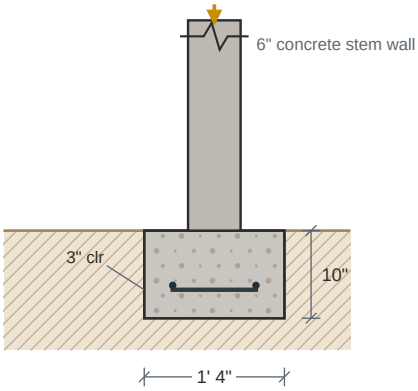

PLAN -- BOTTOM MAT

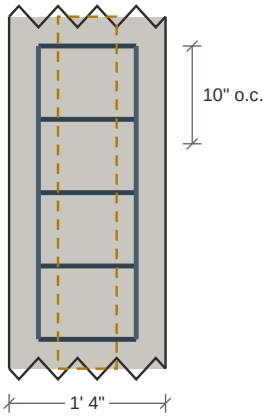

Long.(2) #4 Bars, Transv:#4 @10(in) O.C.

Carrying: Dead 52 plf Floor Live 159 plf

Design Results	Actual	Allowed	Result	Method	Load Combination
Soil Bearing Pressure (psf)	388	1,500	Passed (26% used)	ASD	D+L
One-Way Shear (lbs)	0	6,655	Passed (0% used)	LRFD	1.2D+1.6L+0.5Lr
Moment (ft-lbs)	21	7,036	Passed (0% used)	LRFD	1.2D+1.6L+0.5Lr
Depth Above Bars (in)	6	7	Passed (89% used)	code	ACI 318-14 13.3.1.2

Footing Specification

as entered on the footing, and the mat the check selected

Geometry	
Stem wall type	Concrete
Footing width	1' 4"
Footing depth	10"
Stem wall width	6"
Stem wall height	24"
Stem wall density	145 pcf
Stem wall offset	0

Footing Properties	
Steel yield strength	60,000 psi
Concrete strength	3,000 psi
Soil bearing pressure	1,500 psf
Concrete density	145 pcf
Top reinf. cover	3"
Bottom reinf. cover	3"
Side reinf. cover	3"
Aggregate diameter	3/4"

Soil Properties	
Soil depth above footing	0
Soil density	140 pcf
Soil cohesion	0 psf
Friction angle	30°
Water level	20'

Reinforcement	
Bottom mat	Long.(2) #4 Bars, Transv:#4 @10(in) O.C.
Transverse	#4 @ 10" o.c.
Longitudinal	(2) #4
Selected for	moment and minimum steel
Dowels	(3), bar size not set
Plain concrete (no reinforcing)	No
Override rebar	No
Include water level	No
Allow bearing pressure increase	No

- Soil bearing is checked at service level (ASD) and includes the footing's own weight; shear, moment and crushing at strength level (LRFD), ACI 318-14, loads combined to ASCE 7-16.
- Reinforcement is selected for the moment and for minimum steel (ACI 318-14: 0.0018 Ag for Grade 60), at no more than 3h or 18 in.

Applied Loads	Location	Trib. Width	Dead (0.90)	Floor Live (1.00)	Comments
1 - Uniform (PLF)	--	N/A	52.3	159.2	Linked from: Joists #5, Support 1

Footing #11

PASSED

Continuous Footing 3' wide x 10" deep -- Long.(4) #4 Bars, Transv:#4 @10(in) O.C.

Level: Foundation | f'c 3,000 psi | rebar Fy 60 ksi | soil 1,500 psf | Concrete stem wall 6" | ACI 318-14

Controls: Soil Bearing Pressure 92% used

Adequacy 7.5% (capacity to spare)

WHAT LOADS IT

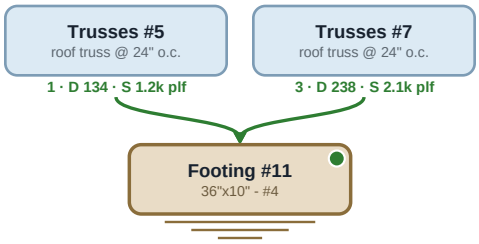

SECTION

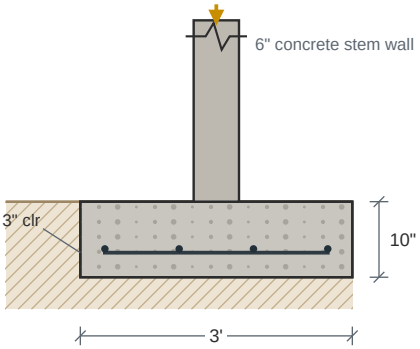

PLAN -- BOTTOM MAT

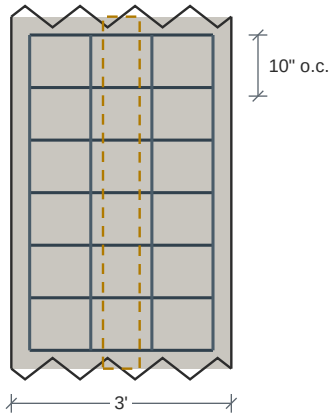

Long.(4) #4 Bars, Transv:#4 @10(in) O.C.

Carrying: Dead 372 plf Snow 3,281 plf

Design Results	Actual	Allowed	Result	Method	Load Combination
Soil Bearing Pressure (psf)	1,387	1,500	Passed (92% used)	ASD	D+S
One-Way Shear (lbs)	1,305	6,655	Passed (20% used)	LRFD	1.2D+1.6S+L
Moment (ft-lbs)	1,483	7,036	Passed (21% used)	LRFD	1.2D+1.6S+L
Depth Above Bars (in)	6	7	Passed (89% used)	code	ACI 318-14 13.3.1.2

Footing Specification

as entered on the footing, and the mat the check selected

Geometry	
Stem wall type	Concrete
Footing width	3'
Footing depth	10"
Stem wall width	6"
Stem wall height	24"
Stem wall density	145 pcf
Stem wall offset	0

Footing Properties	
Steel yield strength	60,000 psi
Concrete strength	3,000 psi
Soil bearing pressure	1,500 psf
Concrete density	145 pcf
Top reinf. cover	3"
Bottom reinf. cover	3"
Side reinf. cover	3"
Aggregate diameter	3/4"

Soil Properties	
Soil depth above footing	0
Soil density	140 pcf
Soil cohesion	0 psf
Friction angle	30°
Water level	20'

Reinforcement	
Bottom mat	Long.(4) #4 Bars, Transv:#4 @10(in) O.C.
Transverse	#4 @ 10" o.c.
Longitudinal	(4) #4
Selected for	moment and minimum steel
Dowels	(3), bar size not set
Plain concrete (no reinforcing)	No
Override rebar	No
Include water level	No
Allow bearing pressure increase	No

- Soil bearing is checked at service level (ASD) and includes the footing's own weight; shear, moment and crushing at strength level (LRFD), ACI 318-14, loads combined to ASCE 7-16.
- Reinforcement is selected for the moment and for minimum steel (ACI 318-14: 0.0018 Ag for Grade 60), at no more than 3h or 18 in.

Applied Loads	Location	Trib. Width	Dead (0.90)	Snow (1.15)	Comments
1 - Uniform (PLF)	--	N/A	133.9	1,181	Linked from: Trusses #5, Support 1
2 - Uniform (PLF)	--	N/A	238	2,100	Linked from: Trusses #7, Support 3

Footing #12

PASSED

Continuous Footing 2' 6" wide x 10" deep -- Long.(3) #4 Bars, Transv:#4 @10(in) O.C.

Level: Foundation | f'c 3,000 psi | rebar Fy 60 ksi | soil 1,500 psf | Concrete stem wall 6" | ACI 318-14

Controls: Depth Above Bars 89% used

Adequacy 16.3% (capacity to spare)

What Loads It

click a box to go to that member

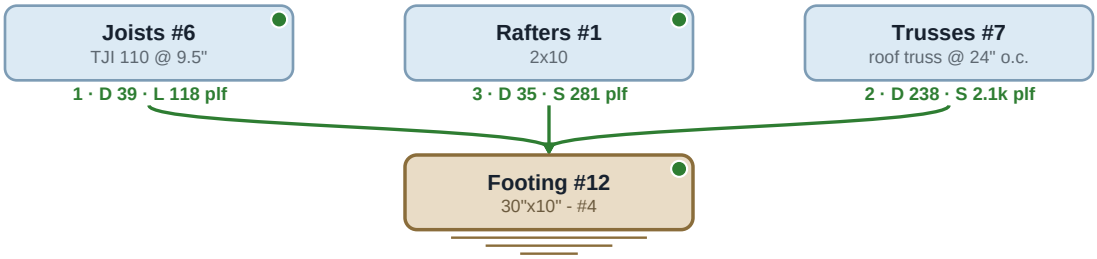

SECTION

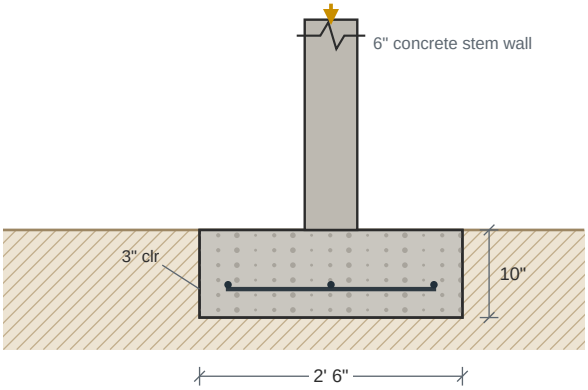

PLAN -- BOTTOM MAT

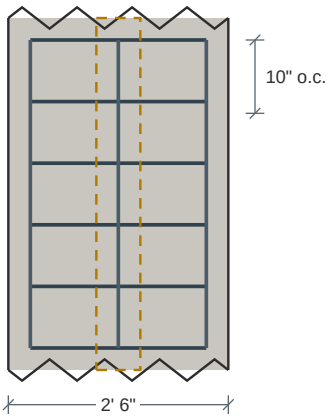

Long.(3) #4 Bars, Transv:#4 @10(in) O.C.

Carrying: Dead 312 plf Floor Live 118 plf Snow 2,381 plf

Design Results	Actual	Allowed	Result	Method	Load Combination
Soil Bearing Pressure (psf)	1,256	1,500	Passed (84% used)	ASD	D+S
One-Way Shear (lbs)	753	6,655	Passed (11% used)	LRFD	1.2D+1.6S+L
Moment (ft-lbs)	860	7,036	Passed (12% used)	LRFD	1.2D+1.6S+L
Depth Above Bars (in)	6	7	Passed (89% used)	code	ACI 318-14 13.3.1.2

Footing Specification

as entered on the footing, and the mat the check selected

Geometry	
Stem wall type	Concrete
Footing width	2' 6"
Footing depth	10"
Stem wall width	6"
Stem wall height	24"
Stem wall density	145 pcf
Stem wall offset	0

Footing Properties	
Steel yield strength	60,000 psi
Concrete strength	3,000 psi
Soil bearing pressure	1,500 psf
Concrete density	145 pcf
Top reinf. cover	3"
Bottom reinf. cover	3"
Side reinf. cover	3"
Aggregate diameter	3/4"

Soil Properties	
Soil depth above footing	0
Soil density	140 pcf
Soil cohesion	0 psf
Friction angle	30°
Water level	20'

Reinforcement	
Bottom mat	Long.(3) #4 Bars, Transv:#4 @10(in) O.C.
Transverse	#4 @ 10" o.c.
Longitudinal	(3) #4
Selected for	moment and minimum steel
Dowels	(3), bar size not set
Plain concrete (no reinforcing)	No
Override rebar	No
Include water level	No
Allow bearing pressure increase	No

Footing #12 (continued)

Continuous Footing | 2' 6" wide x 10" deep -- Long.(3) #4 Bars, Transv:#4 @10(in) O.C.

- Soil bearing is checked at service level (ASD) and includes the footing's own weight; shear, moment and crushing at strength level (LRFD), ACI 318-14, loads combined to ASCE 7-16.
- Reinforcement is selected for the moment and for minimum steel (ACI 318-14: 0.0018 Ag for Grade 60), at no more than 3h or 18 in.

Applied Loads	Location	Trib. Width	Dead (0.90)	Floor Live (1.00)	Snow (1.15)	Comments
1 - Uniform (PLF)	--	N/A	38.8	118.1	--	Linked from: Joists #6, Support 1
2 - Uniform (PLF)	--	N/A	238	--	2,100	Linked from: Trusses #7, Support 2
3 - Uniform (PLF)	--	N/A	34.9	--	281.2	Linked from: Rafters #1, Support 3

Footing #13

PASSED

Continuous Footing 2' 6" wide x 10" deep -- Long.(3) #4 Bars, Transv:#4 @10(in) O.C.

Level: Foundation | f'c 3,000 psi | rebar Fy 60 ksi | soil 1,500 psf | Concrete stem wall 6" | ACI 318-14

Controls: Soil Bearing Pressure 92% used

Adequacy 8.4% (capacity to spare)

What Loads It

click a box to go to that member

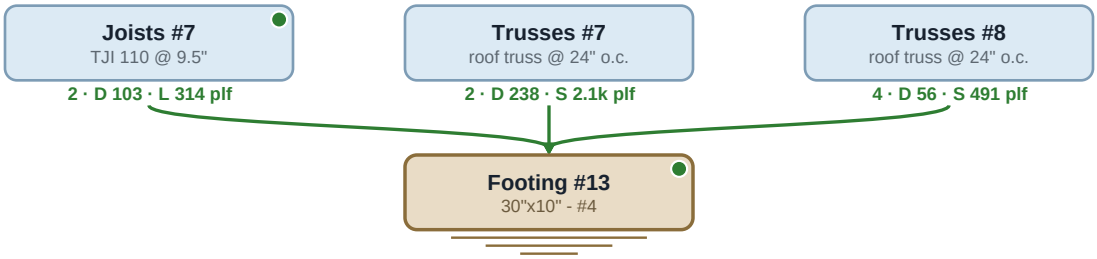

SECTION

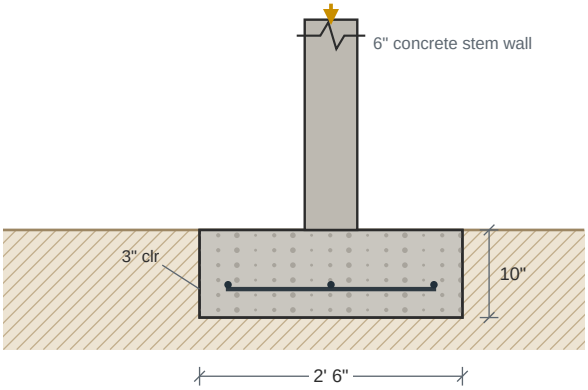

PLAN -- BOTTOM MAT

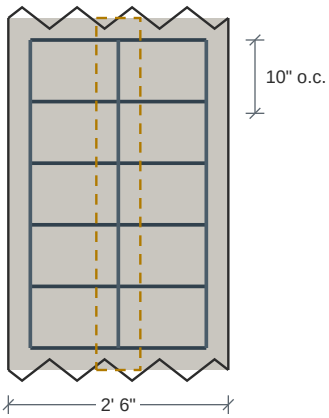

Long.(3) #4 Bars, Transv:#4 @10(in) O.C.

Carrying: Dead 397 plf Floor Live 314 plf Snow 2,591 plf

Design Results	Actual	Allowed	Result	Method	Load Combination
Soil Bearing Pressure (psf)	1,374	1,500	Passed (92% used)	ASD	D+S
One-Way Shear (lbs)	864	6,655	Passed (13% used)	LRFD	1.2D+1.6S+L
Moment (ft-lbs)	987	7,036	Passed (14% used)	LRFD	1.2D+1.6S+L
Depth Above Bars (in)	6	7	Passed (89% used)	code	ACI 318-14 13.3.1.2

Footing Specification

as entered on the footing, and the mat the check selected

Geometry	
Stem wall type	Concrete
Footing width	2' 6"
Footing depth	10"
Stem wall width	6"
Stem wall height	24"
Stem wall density	145 pcf
Stem wall offset	0

Footing Properties	
Steel yield strength	60,000 psi
Concrete strength	3,000 psi
Soil bearing pressure	1,500 psf
Concrete density	145 pcf
Top reinf. cover	3"
Bottom reinf. cover	3"
Side reinf. cover	3"
Aggregate diameter	3/4"

Soil Properties	
Soil depth above footing	0
Soil density	140 pcf
Soil cohesion	0 psf
Friction angle	30°
Water level	20'

Reinforcement	
Bottom mat	Long.(3) #4 Bars, Transv:#4 @10(in) O.C.
Transverse	#4 @ 10" o.c.
Longitudinal	(3) #4
Selected for	moment and minimum steel
Dowels	(3), bar size not set
Plain concrete (no reinforcing)	No
Override rebar	No
Include water level	No
Allow bearing pressure increase	No

Footing #13 (continued)

Continuous Footing | 2' 6" wide x 10" deep -- Long.(3) #4 Bars, Transv:#4 @10(in) O.C.

- Soil bearing is checked at service level (ASD) and includes the footing's own weight; shear, moment and crushing at strength level (LRFD), ACI 318-14, loads combined to ASCE 7-16.
- Reinforcement is selected for the moment and for minimum steel (ACI 318-14: 0.0018 Ag for Grade 60), at no more than 3h or 18 in.

Applied Loads	Location	Trib. Width	Dead (0.90)	Floor Live (1.00)	Snow (1.15)	Comments
1 - Uniform (PLF)	--	N/A	103.3	314.4	--	Linked from: Joists #7, Support 2
2 - Uniform (PLF)	--	N/A	238	--	2,100	Linked from: Trusses #7, Support 2
3 - Uniform (PLF)	--	N/A	55.6	--	490.7	Linked from: Trusses #8, Support 4

Footing #14

PASSED

Continuous Footing 2' wide x 10" deep -- Long.(3) #4 Bars, Transv:#4 @10(in) O.C.

Level: Foundation | f'c 3,000 psi | rebar Fy 60 ksi | soil 1,500 psf | Concrete stem wall 6" | ACI 318-14

Controls: Depth Above Bars 89% used

Adequacy 23.7% (capacity to spare)

What Loads It

click a box to go to that member

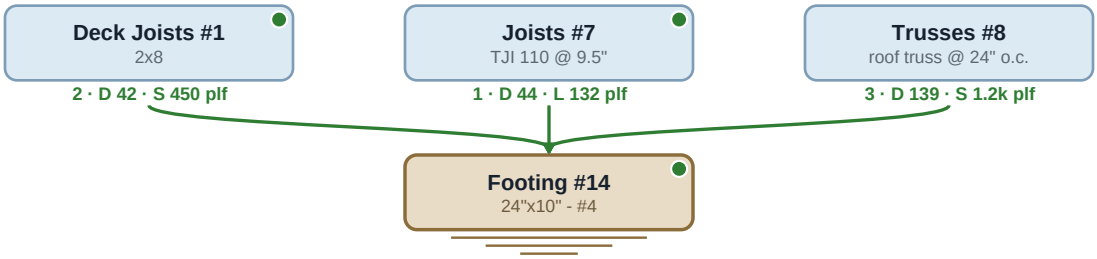

SECTION

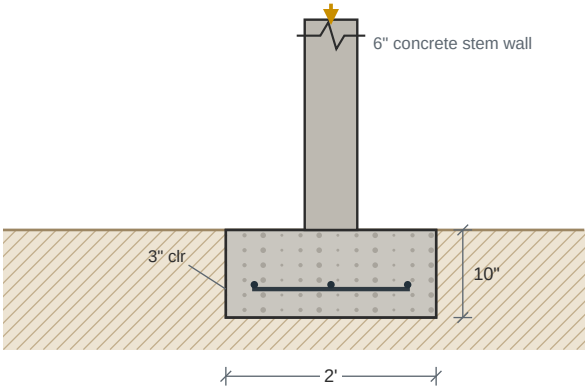

PLAN -- BOTTOM MAT

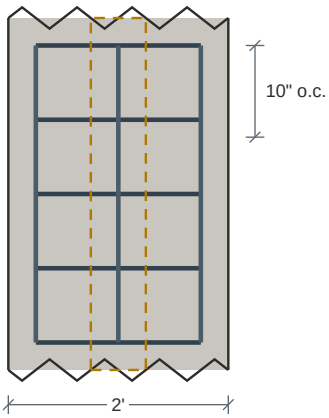

Long.(3) #4 Bars, Transv:#4 @10(in) O.C.

Carrying: Dead 224 plf Floor Live 132 plf Snow 1,677 plf

Design Results	Actual	Allowed	Result	Method	Load Combination
Soil Bearing Pressure (psf)	1,144	1,500	Passed (76% used)	ASD	D+S
One-Way Shear (lbs)	289	6,655	Passed (4% used)	LRFD	1.2D+1.6S+L
Moment (ft-lbs)	434	7,036	Passed (6% used)	LRFD	1.2D+1.6S+L
Depth Above Bars (in)	6	7	Passed (89% used)	code	ACI 318-14 13.3.1.2

Footing Specification

as entered on the footing, and the mat the check selected

Geometry	
Stem wall type	Concrete
Footing width	2'
Footing depth	10"
Stem wall width	6"
Stem wall height	24"
Stem wall density	145 pcf
Stem wall offset	0

Footing Properties	
Steel yield strength	60,000 psi
Concrete strength	3,000 psi
Soil bearing pressure	1,500 psf
Concrete density	145 pcf
Top reinf. cover	3"
Bottom reinf. cover	3"
Side reinf. cover	3"
Aggregate diameter	3/4"

Soil Properties	
Soil depth above footing	0
Soil density	140 pcf
Soil cohesion	0 psf
Friction angle	30°
Water level	20'

Reinforcement	
Bottom mat	Long.(3) #4 Bars, Transv:#4 @10(in) O.C.
Transverse	#4 @ 10" o.c.
Longitudinal	(3) #4
Selected for	moment and minimum steel
Dowels	(3), bar size not set
Plain concrete (no reinforcing)	No
Override rebar	No
Include water level	No
Allow bearing pressure increase	No

Footing #14 (continued)

Continuous Footing | 2' wide x 10" deep -- Long.(3) #4 Bars, Transv:#4 @10(in) O.C.

- Soil bearing is checked at service level (ASD) and includes the footing's own weight; shear, moment and crushing at strength level (LRFD), ACI 318-14, loads combined to ASCE 7-16.
- Reinforcement is selected for the moment and for minimum steel (ACI 318-14: 0.0018 Ag for Grade 60), at no more than 3h or 18 in.

Applied Loads	Location	Trib. Width	Dead (0.90)	Floor Live (1.00)	Snow (1.15)	Comments
1 - Uniform (PLF)	--	N/A	43.5	132.3	--	Linked from: Joists #7, Support 1
2 - Uniform (PLF)	--	N/A	41.6	--	450	Linked from: Deck Joists #1, Support 2
3 - Uniform (PLF)	--	N/A	139.1	--	1,227	Linked from: Trusses #8, Support 3

Footing #15

PASSED

Continuous Footing 1' 4" wide x 10" deep -- Long.(2) #4 Bars, Transv:#4 @10(in) O.C.

Level: Foundation | f'c 3,000 psi | rebar Fy 60 ksi | soil 1,500 psf | Concrete stem wall 6" | ACI 318-14

Controls: Depth Above Bars 89% used

Adequacy 51% (capacity to spare)

WHAT LOADS IT

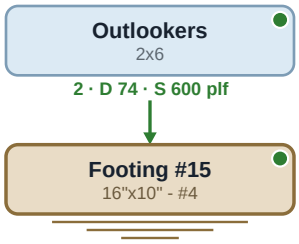

SECTION

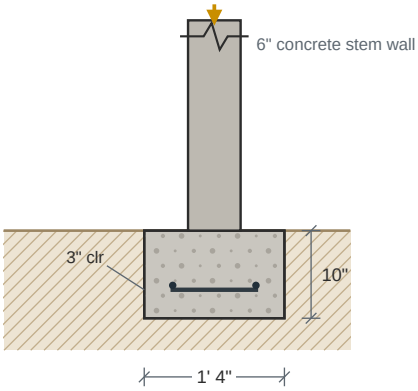

PLAN -- BOTTOM MAT

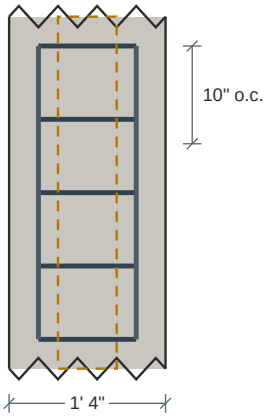

Long.(2) #4 Bars, Transv:#4 @10(in) O.C.

Carrying: Dead 74 plf Snow 600 plf

Design Results	Actual	Allowed	Result	Method	Load Combination
Soil Bearing Pressure (psf)	735	1,500	Passed (49% used)	ASD	D+S
One-Way Shear (lbs)	0	6,655	Passed (0% used)	LRFD	1.2D+1.6S+L
Moment (ft-lbs)	68	7,036	Passed (1% used)	LRFD	1.2D+1.6S+L
Depth Above Bars (in)	6	7	Passed (89% used)	code	ACI 318-14 13.3.1.2

Footing Specification

as entered on the footing, and the mat the check selected

Geometry	
Stem wall type	Concrete
Footing width	1' 4"
Footing depth	10"
Stem wall width	6"
Stem wall height	24"
Stem wall density	145 pcf
Stem wall offset	0

Footing Properties	
Steel yield strength	60,000 psi
Concrete strength	3,000 psi
Soil bearing pressure	1,500 psf
Concrete density	145 pcf
Top reinf. cover	3"
Bottom reinf. cover	3"
Side reinf. cover	3"
Aggregate diameter	3/4"

Soil Properties	
Soil depth above footing	0
Soil density	140 pcf
Soil cohesion	0 psf
Friction angle	30°
Water level	20'

Reinforcement	
Bottom mat	Long.(2) #4 Bars, Transv:#4 @10(in) O.C.
Transverse	#4 @ 10" o.c.
Longitudinal	(2) #4
Selected for	moment and minimum steel
Dowels	(3), bar size not set
Plain concrete (no reinforcing)	No
Override rebar	No
Include water level	No
Allow bearing pressure increase	No

- Soil bearing is checked at service level (ASD) and includes the footing's own weight; shear, moment and crushing at strength level (LRFD), ACI 318-14, loads combined to ASCE 7-16.
- Reinforcement is selected for the moment and for minimum steel (ACI 318-14: 0.0018 Ag for Grade 60), at no more than 3h or 18 in.

Applied Loads	Location	Trib. Width	Dead (0.90)	Snow (1.15)	Comments
1 - Uniform (PLF)	--	N/A	73.6	600	Linked from: Outlookers, Support 2

Footing #16

PASSED

Continuous Footing 1' 4" wide x 10" deep -- Long.(2) #4 Bars, Transv:#4 @10(in) O.C.

Level: Foundation | f'c 3,000 psi | rebar Fy 60 ksi | soil 1,500 psf | Concrete stem wall 6" | ACI 318-14

Controls: Depth Above Bars 89% used

Adequacy 51% (capacity to spare)

WHAT LOADS IT

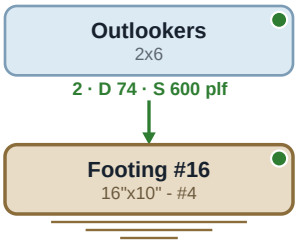

SECTION

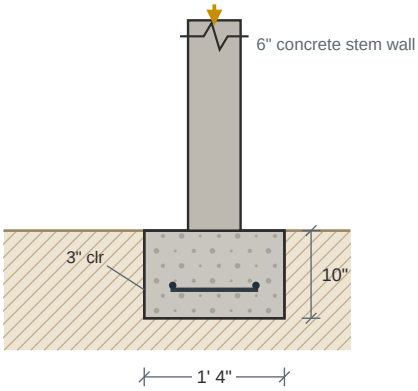

PLAN -- BOTTOM MAT

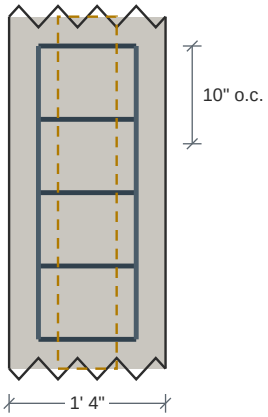

Long.(2) #4 Bars, Transv:#4 @10(in) O.C.

Carrying: Dead 74 plf Snow 600 plf

Design Results	Actual	Allowed	Result	Method	Load Combination
Soil Bearing Pressure (psf)	735	1,500	Passed (49% used)	ASD	D+S
One-Way Shear (lbs)	0	6,655	Passed (0% used)	LRFD	1.2D+1.6S+L
Moment (ft-lbs)	68	7,036	Passed (1% used)	LRFD	1.2D+1.6S+L
Depth Above Bars (in)	6	7	Passed (89% used)	code	ACI 318-14 13.3.1.2

Footing Specification

as entered on the footing, and the mat the check selected

Geometry	
Stem wall type	Concrete
Footing width	1' 4"
Footing depth	10"
Stem wall width	6"
Stem wall height	24"
Stem wall density	145 pcf
Stem wall offset	0

Footing Properties	
Steel yield strength	60,000 psi
Concrete strength	3,000 psi
Soil bearing pressure	1,500 psf
Concrete density	145 pcf
Top reinf. cover	3"
Bottom reinf. cover	3"
Side reinf. cover	3"
Aggregate diameter	3/4"

Soil Properties	
Soil depth above footing	0
Soil density	140 pcf
Soil cohesion	0 psf
Friction angle	30°
Water level	20'

Reinforcement	
Bottom mat	Long.(2) #4 Bars, Transv:#4 @10(in) O.C.
Transverse	#4 @ 10" o.c.
Longitudinal	(2) #4
Selected for	moment and minimum steel
Dowels	(3), bar size not set
Plain concrete (no reinforcing)	No
Override rebar	No
Include water level	No
Allow bearing pressure increase	No

- Soil bearing is checked at service level (ASD) and includes the footing's own weight; shear, moment and crushing at strength level (LRFD), ACI 318-14, loads combined to ASCE 7-16.
- Reinforcement is selected for the moment and for minimum steel (ACI 318-14: 0.0018 Ag for Grade 60), at no more than 3h or 18 in.

Applied Loads	Location	Trib. Width	Dead (0.90)	Snow (1.15)	Comments
1 - Uniform (PLF)	--	N/A	73.6	600	Linked from: Outlookers, Support 2

Footing #17

PASSED

Continuous Footing 1' 4" wide x 10" deep -- Long.(2) #4 Bars, Transv:#4 @10(in) O.C.

Level: Foundation | f'c 3,000 psi | rebar Fy 60 ksi | soil 1,500 psf | Concrete stem wall 6" | ACI 318-14

Controls: Depth Above Bars 89% used

Adequacy 18% (capacity to spare)

WHAT LOADS IT

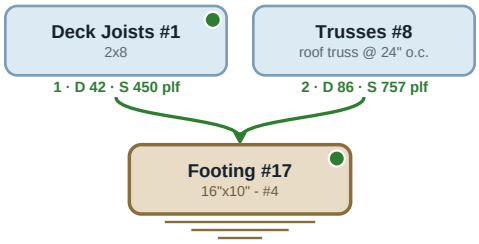

SECTION

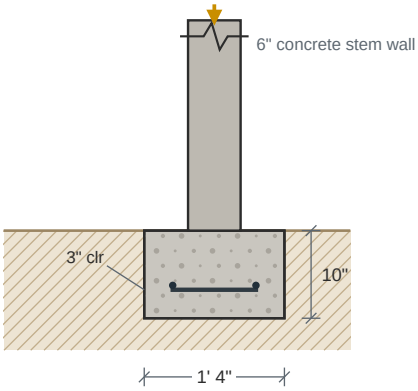

PLAN -- BOTTOM MAT

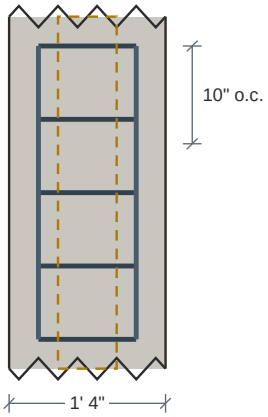

Long.(2) #4 Bars, Transv:#4 @10(in) O.C.

Carrying: Dead 127 plf Snow 1,207 plf

Design Results	Actual	Allowed	Result	Method	Load Combination
Soil Bearing Pressure (psf)	1,231	1,500	Passed (82% used)	ASD	D+S
One-Way Shear (lbs)	0	6,655	Passed (0% used)	LRFD	1.2D+1.6S+L
Moment (ft-lbs)	136	7,036	Passed (2% used)	LRFD	1.2D+1.6S+L
Depth Above Bars (in)	6	7	Passed (89% used)	code	ACI 318-14 13.3.1.2

Footing Specification

as entered on the footing, and the mat the check selected

Geometry	
Stem wall type	Concrete
Footing width	1' 4"
Footing depth	10"
Stem wall width	6"
Stem wall height	24"
Stem wall density	145 pcf
Stem wall offset	0

Footing Properties	
Steel yield strength	60,000 psi
Concrete strength	3,000 psi
Soil bearing pressure	1,500 psf
Concrete density	145 pcf
Top reinf. cover	3"
Bottom reinf. cover	3"
Side reinf. cover	3"
Aggregate diameter	3/4"

Soil Properties	
Soil depth above footing	0
Soil density	140 pcf
Soil cohesion	0 psf
Friction angle	30°
Water level	20'

Reinforcement	
Bottom mat	Long.(2) #4 Bars, Transv:#4 @10(in) O.C.
Transverse	#4 @ 10" o.c.
Longitudinal	(2) #4
Selected for	moment and minimum steel
Dowels	(3), bar size not set
Plain concrete (no reinforcing)	No
Override rebar	No
Include water level	No
Allow bearing pressure increase	No

- Soil bearing is checked at service level (ASD) and includes the footing's own weight; shear, moment and crushing at strength level (LRFD), ACI 318-14, loads combined to ASCE 7-16.
- Reinforcement is selected for the moment and for minimum steel (ACI 318-14: 0.0018 Ag for Grade 60), at no more than 3h or 18 in.

Applied Loads	Location	Trib. Width	Dead (0.90)	Snow (1.15)	Comments
1 - Uniform (PLF)	--	N/A	41.6	450	Linked from: Deck Joists #1, Support 1
2 - Uniform (PLF)	--	N/A	85.8	757.4	Linked from: Trusses #8, Support 2

Footing #18

PASSED

Continuous Footing 1' 4" wide x 10" deep -- Long.(2) #4 Bars, Transv:#4 @10(in) O.C.

Level: Foundation | f'c 3,000 psi | rebar Fy 60 ksi | soil 1,500 psf | Concrete stem wall 6" | ACI 318-14

Controls: Depth Above Bars 89% used

Adequacy 66.3% (capacity to spare)

WHAT LOADS IT

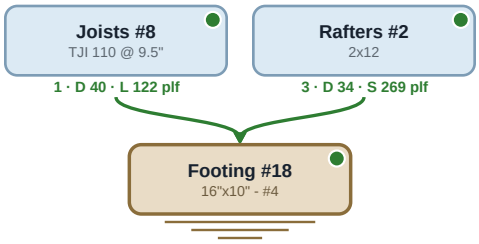

SECTION

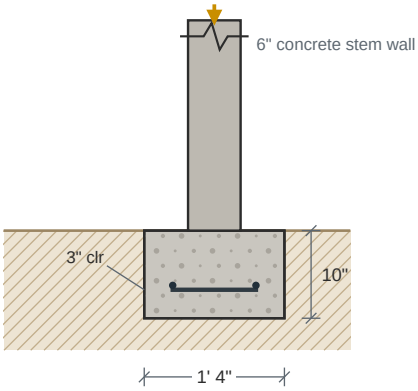

PLAN -- BOTTOM MAT

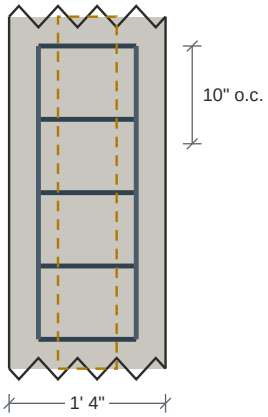

Long.(2) #4 Bars, Transv:#4 @10(in) O.C.

Carrying: Dead 74 plf Floor Live 122 plf Snow 269 plf

Design Results	Actual	Allowed	Result	Method	Load Combination
Soil Bearing Pressure (psf)	505	1,500	Passed (34% used)	ASD	D+0.75L+0.75S
One-Way Shear (lbs)	0	6,655	Passed (0% used)	LRFD	1.2D+1.6S+L
Moment (ft-lbs)	42	7,036	Passed (1% used)	LRFD	1.2D+1.6S+L
Depth Above Bars (in)	6	7	Passed (89% used)	code	ACI 318-14 13.3.1.2

Footing Specification

as entered on the footing, and the mat the check selected

Geometry	
Stem wall type	Concrete
Footing width	1' 4"
Footing depth	10"
Stem wall width	6"
Stem wall height	24"
Stem wall density	145 pcf
Stem wall offset	0

Footing Properties	
Steel yield strength	60,000 psi
Concrete strength	3,000 psi
Soil bearing pressure	1,500 psf
Concrete density	145 pcf
Top reinf. cover	3"
Bottom reinf. cover	3"
Side reinf. cover	3"
Aggregate diameter	3/4"

Soil Properties	
Soil depth above footing	0
Soil density	140 pcf
Soil cohesion	0 psf
Friction angle	30°
Water level	20'

Reinforcement	
Bottom mat	Long.(2) #4 Bars, Transv:#4 @10(in) O.C.
Transverse	#4 @ 10" o.c.
Longitudinal	(2) #4
Selected for	moment and minimum steel
Dowels	(3), bar size not set
Plain concrete (no reinforcing)	No
Override rebar	No
Include water level	No
Allow bearing pressure increase	No

- Soil bearing is checked at service level (ASD) and includes the footing's own weight; shear, moment and crushing at strength level (LRFD), ACI 318-14, loads combined to ASCE 7-16.
- Reinforcement is selected for the moment and for minimum steel (ACI 318-14: 0.0018 Ag for Grade 60), at no more than 3h or 18 in.

Applied Loads	Location	Trib. Width	Dead (0.90)	Floor Live (1.00)	Snow (1.15)	Comments
1 - Uniform (PLF)	--	N/A	40.1	122.1	--	Linked from: Joists #8, Support 1
2 - Uniform (PLF)	--	N/A	33.9	--	269.1	Linked from: Rafters #2, Support 3

Footing #19

PASSED

Continuous Footing 1' 4" wide x 10" deep -- Long.(2) #4 Bars, Transv:#4 @10(in) O.C.

Level: Foundation | f'c 3,000 psi | rebar Fy 60 ksi | soil 1,500 psf | Wood stem wall 3 1/2" | ACI 318-14

Controls: Depth Above Bars 89% used

Adequacy 70.1% (capacity to spare)

WHAT LOADS IT

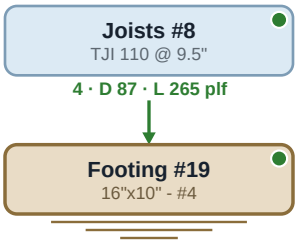

SECTION

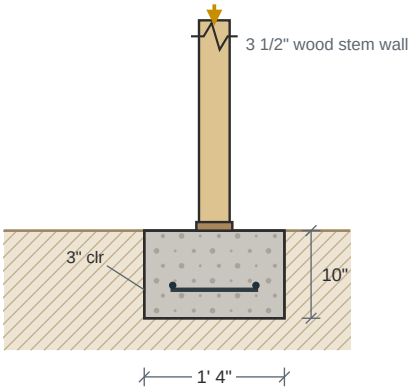

PLAN -- BOTTOM MAT

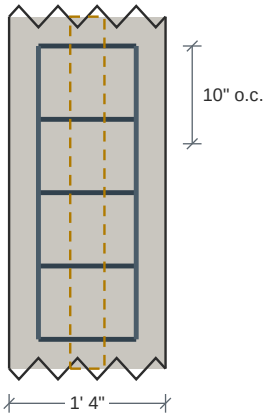

Long.(2) #4 Bars, Transv:#4 @10(in) O.C.

Carrying: Dead 87 plf Floor Live 265 plf

Design Results	Actual	Allowed	Result	Method	Load Combination
Soil Bearing Pressure (psf)	448	1,500	Passed (30% used)	ASD	D+L
One-Way Shear (lbs)	0	6,655	Passed (0% used)	LRFD	1.2D+1.6L+0.5Lr
Moment (ft-lbs)	70	7,036	Passed (1% used)	LRFD	1.2D+1.6L+0.5Lr
Depth Above Bars (in)	6	7	Passed (89% used)	code	ACI 318-14 13.3.1.2

Footing Specification

as entered on the footing, and the mat the check selected

Geometry	
Stem wall type	Wood
Footing width	1' 4"
Footing depth	10"
Stem wall width	3 1/2"
Stem wall height	24"
Stem wall density	145 pcf
Stem wall offset	0

Footing Properties	
Steel yield strength	60,000 psi
Concrete strength	3,000 psi
Soil bearing pressure	1,500 psf
Concrete density	145 pcf
Top reinf. cover	3"
Bottom reinf. cover	3"
Side reinf. cover	3"
Aggregate diameter	3/4"

Soil Properties	
Soil depth above footing	0
Soil density	140 pcf
Soil cohesion	0 psf
Friction angle	30°
Water level	20'

Reinforcement	
Bottom mat	Long.(2) #4 Bars, Transv:#4 @10(in) O.C.
Transverse	#4 @ 10" o.c.
Longitudinal	(2) #4
Selected for	moment and minimum steel
Dowels	(3), bar size not set
Plain concrete (no reinforcing)	No
Override rebar	No
Include water level	No
Allow bearing pressure increase	No

- Soil bearing is checked at service level (ASD) and includes the footing's own weight; shear, moment and crushing at strength level (LRFD), ACI 318-14, loads combined to ASCE 7-16.
- Reinforcement is selected for the moment and for minimum steel (ACI 318-14: 0.0018 Ag for Grade 60), at no more than 3h or 18 in.

Applied Loads	Location	Trib. Width	Dead (0.90)	Floor Live (1.00)	Comments
1 - Uniform (PLF)	--	N/A	87.2	265.1	Linked from: Joists #8, Support 4

Footing #20

PASSED

Continuous Footing 2' wide x 10" deep -- Long.(3) #4 Bars, Transv:#4 @10(in) O.C.

Level: Foundation | f'c 3,000 psi | rebar Fy 60 ksi | soil 1,500 psf | Concrete stem wall 6" | ACI 318-14

Controls: Depth Above Bars 89% used

Adequacy 26% (capacity to spare)

WHAT LOADS IT

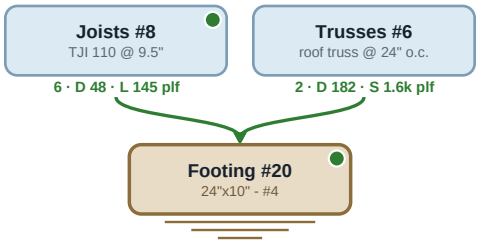

SECTION

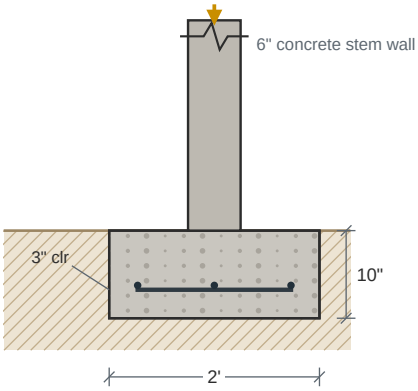

PLAN -- BOTTOM MAT

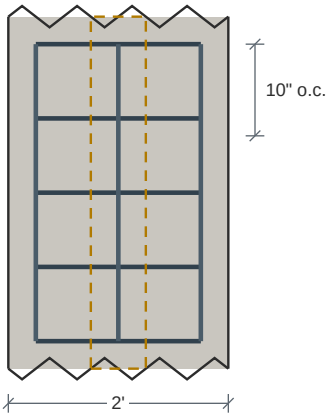

Long.(3) #4 Bars, Transv:#4 @10(in) O.C.

Carrying: Dead 229 plf Floor Live 145 plf Snow 1,604 plf

Design Results	Actual	Allowed	Result	Method	Load Combination
Soil Bearing Pressure (psf)	1,110	1,500	Passed (74% used)	ASD	D+S
One-Way Shear (lbs)	280	6,655	Passed (4% used)	LRFD	1.2D+1.6S+L
Moment (ft-lbs)	420	7,036	Passed (6% used)	LRFD	1.2D+1.6S+L
Depth Above Bars (in)	6	7	Passed (89% used)	code	ACI 318-14 13.3.1.2

Footing Specification

as entered on the footing, and the mat the check selected

Geometry	
Stem wall type	Concrete
Footing width	2'
Footing depth	10"
Stem wall width	6"
Stem wall height	24"
Stem wall density	145 pcf
Stem wall offset	0

Footing Properties	
Steel yield strength	60,000 psi
Concrete strength	3,000 psi
Soil bearing pressure	1,500 psf
Concrete density	145 pcf
Top reinf. cover	3"
Bottom reinf. cover	3"
Side reinf. cover	3"
Aggregate diameter	3/4"

Soil Properties	
Soil depth above footing	0
Soil density	140 pcf
Soil cohesion	0 psf
Friction angle	30°
Water level	20'

Reinforcement	
Bottom mat	Long.(3) #4 Bars, Transv:#4 @10(in) O.C.
Transverse	#4 @ 10" o.c.
Longitudinal	(3) #4
Selected for	moment and minimum steel
Dowels	(3), bar size not set
Plain concrete (no reinforcing)	No
Override rebar	No
Include water level	No
Allow bearing pressure increase	No

- Soil bearing is checked at service level (ASD) and includes the footing's own weight; shear, moment and crushing at strength level (LRFD), ACI 318-14, loads combined to ASCE 7-16.
- Reinforcement is selected for the moment and for minimum steel (ACI 318-14: 0.0018 Ag for Grade 60), at no more than 3h or 18 in.

Applied Loads	Location	Trib. Width	Dead (0.90)	Floor Live (1.00)	Snow (1.15)	Comments
1 - Uniform (PLF)	--	N/A	47.6	144.9	--	Linked from: Joists #8, Support 6
2 - Uniform (PLF)	--	N/A	181.8	--	1,604	Linked from: Trusses #6, Support 2

Footing #21

PASSED

Continuous Footing 1' 4" wide x 10" deep -- Long.(2) #4 Bars, Transv:#4 @10(in) O.C.

Level: Foundation | f'c 3,000 psi | rebar Fy 60 ksi | soil 1,500 psf | Concrete stem wall 6" | ACI 318-14

Controls: Depth Above Bars 89% used

Adequacy 51% (capacity to spare)

WHAT LOADS IT

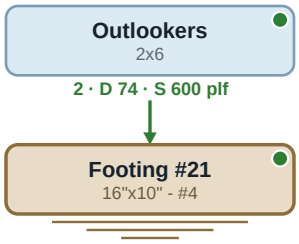

SECTION

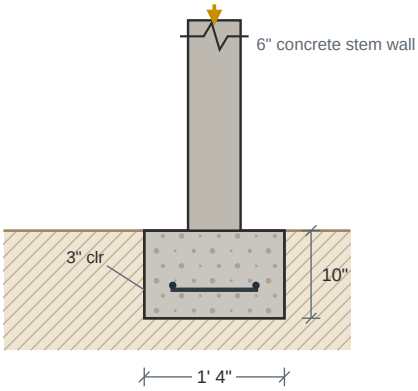

PLAN -- BOTTOM MAT

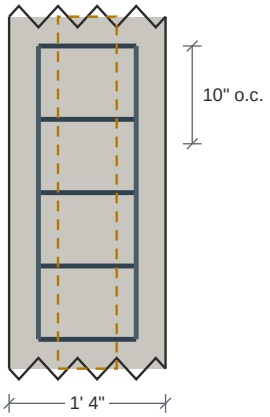

Long.(2) #4 Bars, Transv:#4 @10(in) O.C.

Carrying: Dead 74 plf Snow 600 plf

Design Results	Actual	Allowed	Result	Method	Load Combination
Soil Bearing Pressure (psf)	735	1,500	Passed (49% used)	ASD	D+S
One-Way Shear (lbs)	0	6,655	Passed (0% used)	LRFD	1.2D+1.6S+L
Moment (ft-lbs)	68	7,036	Passed (1% used)	LRFD	1.2D+1.6S+L
Depth Above Bars (in)	6	7	Passed (89% used)	code	ACI 318-14 13.3.1.2

Footing Specification

as entered on the footing, and the mat the check selected

Geometry	
Stem wall type	Concrete
Footing width	1' 4"
Footing depth	10"
Stem wall width	6"
Stem wall height	24"
Stem wall density	145 pcf
Stem wall offset	0

Footing Properties	
Steel yield strength	60,000 psi
Concrete strength	3,000 psi
Soil bearing pressure	1,500 psf
Concrete density	145 pcf
Top reinf. cover	3"
Bottom reinf. cover	3"
Side reinf. cover	3"
Aggregate diameter	3/4"

Soil Properties	
Soil depth above footing	0
Soil density	140 pcf
Soil cohesion	0 psf
Friction angle	30°
Water level	20'

Reinforcement	
Bottom mat	Long.(2) #4 Bars, Transv:#4 @10(in) O.C.
Transverse	#4 @ 10" o.c.
Longitudinal	(2) #4
Selected for	moment and minimum steel
Dowels	(3), bar size not set
Plain concrete (no reinforcing)	No
Override rebar	No
Include water level	No
Allow bearing pressure increase	No

- Soil bearing is checked at service level (ASD) and includes the footing's own weight; shear, moment and crushing at strength level (LRFD), ACI 318-14, loads combined to ASCE 7-16.
- Reinforcement is selected for the moment and for minimum steel (ACI 318-14: 0.0018 Ag for Grade 60), at no more than 3h or 18 in.

Applied Loads	Location	Trib. Width	Dead (0.90)	Snow (1.15)	Comments
1 - Uniform (PLF)	--	N/A	73.6	600	Linked from: Outlookers, Support 2

Footing #22

PASSED

Continuous Footing 2' wide x 10" deep -- Long.(3) #4 Bars, Transv:#4 @10(in) O.C.

Level: Foundation | f'c 3,000 psi | rebar Fy 60 ksi | soil 1,500 psf | Concrete stem wall 6" | ACI 318-14

Controls: Depth Above Bars 89% used

Adequacy 16.1% (capacity to spare)

WHAT LOADS IT

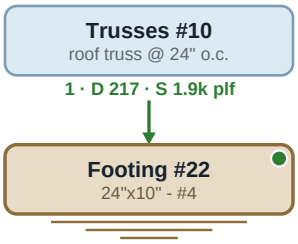

SECTION

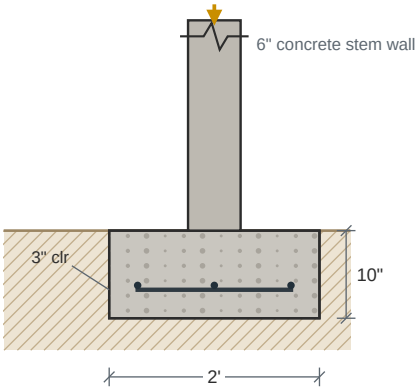

PLAN -- BOTTOM MAT

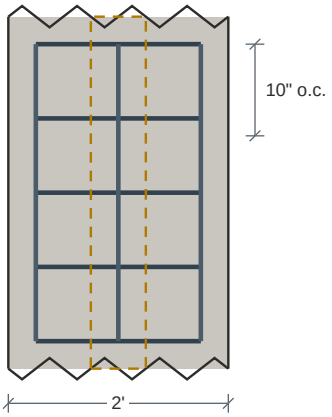

Long.(3) #4 Bars, Transv:#4 @10(in) O.C.

Carrying: Dead 217 plf Snow 1,912 plf

Design Results	Actual	Allowed	Result	Method	Load Combination
Soil Bearing Pressure (psf)	1,258	1,500	Passed (84% used)	ASD	D+S
One-Way Shear (lbs)	311	6,655	Passed (5% used)	LRFD	1.2D+1.6S+L
Moment (ft-lbs)	467	7,036	Passed (7% used)	LRFD	1.2D+1.6S+L
Depth Above Bars (in)	6	7	Passed (89% used)	code	ACI 318-14 13.3.1.2

Footing Specification

as entered on the footing, and the mat the check selected

Geometry	
Stem wall type	Concrete
Footing width	2'
Footing depth	10"
Stem wall width	6"
Stem wall height	24"
Stem wall density	145 pcf
Stem wall offset	0

Footing Properties	
Steel yield strength	60,000 psi
Concrete strength	3,000 psi
Soil bearing pressure	1,500 psf
Concrete density	145 pcf
Top reinf. cover	3"
Bottom reinf. cover	3"
Side reinf. cover	3"
Aggregate diameter	3/4"

Soil Properties	
Soil depth above footing	0
Soil density	140 pcf
Soil cohesion	0 psf
Friction angle	30°
Water level	20'

Reinforcement	
Bottom mat	Long.(3) #4 Bars, Transv:#4 @10(in) O.C.
Transverse	#4 @ 10" o.c.
Longitudinal	(3) #4
Selected for	moment and minimum steel
Dowels	(3), bar size not set
Plain concrete (no reinforcing)	No
Override rebar	No
Include water level	No
Allow bearing pressure increase	No

- Soil bearing is checked at service level (ASD) and includes the footing's own weight; shear, moment and crushing at strength level (LRFD), ACI 318-14, loads combined to ASCE 7-16.
- Reinforcement is selected for the moment and for minimum steel (ACI 318-14: 0.0018 Ag for Grade 60), at no more than 3h or 18 in.

Applied Loads	Location	Trib. Width	Dead (0.90)	Snow (1.15)	Comments
1 - Uniform (PLF)	--	N/A	216.8	1,912	Linked from: Trusses #10, Support 1

Footing #23

PASSED

Continuous Footing 2' wide x 10" deep -- Long.(3) #4 Bars, Transv:#4 @10(in) O.C.

Level: Foundation | f'c 3,000 psi | rebar Fy 60 ksi | soil 1,500 psf | Wood stem wall 3 1/2" | ACI 318-14

Controls: Depth Above Bars 89% used

Adequacy 18.1% (capacity to spare)

WHAT LOADS IT

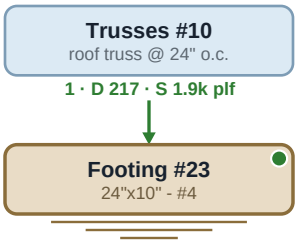

SECTION

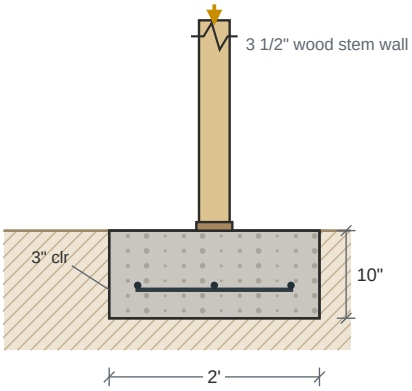

PLAN -- BOTTOM MAT

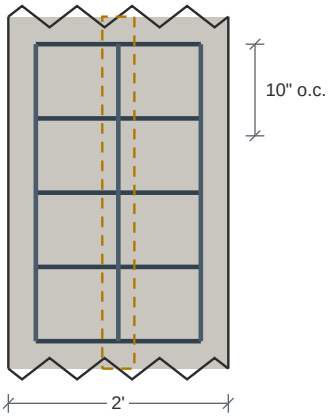

Long.(3) #4 Bars, Transv:#4 @10(in) O.C.

Carrying: Dead 217 plf Snow 1,912 plf

Design Results	Actual	Allowed	Result	Method	Load Combination
Soil Bearing Pressure (psf)	1,228	1,500	Passed (82% used)	ASD	D+S
One-Way Shear (lbs)	484	6,655	Passed (7% used)	LRFD	1.2D+1.6S+L
Moment (ft-lbs)	713	7,036	Passed (10% used)	LRFD	1.2D+1.6S+L
Depth Above Bars (in)	6	7	Passed (89% used)	code	ACI 318-14 13.3.1.2

Footing Specification

as entered on the footing, and the mat the check selected

Geometry	
Stem wall type	Wood
Footing width	2'
Footing depth	10"
Stem wall width	3 1/2"
Stem wall height	24"
Stem wall density	145 pcf
Stem wall offset	0

Footing Properties	
Steel yield strength	60,000 psi
Concrete strength	3,000 psi
Soil bearing pressure	1,500 psf
Concrete density	145 pcf
Top reinf. cover	3"
Bottom reinf. cover	3"
Side reinf. cover	3"
Aggregate diameter	3/4"

Soil Properties	
Soil depth above footing	0
Soil density	140 pcf
Soil cohesion	0 psf
Friction angle	30°
Water level	20'

Reinforcement	
Bottom mat	Long.(3) #4 Bars, Transv:#4 @10(in) O.C.
Transverse	#4 @ 10" o.c.
Longitudinal	(3) #4
Selected for	moment and minimum steel
Dowels	(3), bar size not set
Plain concrete (no reinforcing)	No
Override rebar	No
Include water level	No
Allow bearing pressure increase	No

- Soil bearing is checked at service level (ASD) and includes the footing's own weight; shear, moment and crushing at strength level (LRFD), ACI 318-14, loads combined to ASCE 7-16.
- Reinforcement is selected for the moment and for minimum steel (ACI 318-14: 0.0018 Ag for Grade 60), at no more than 3h or 18 in.

Applied Loads	Location	Trib. Width	Dead (0.90)	Snow (1.15)	Comments
1 - Uniform (PLF)	--	N/A	216.8	1,912	Linked from: Trusses #10, Support 1

Footing #24

PASSED

Continuous Footing 2' wide x 10" deep -- Long.(3) #4 Bars, Transv:#4 @10(in) O.C.

Level: Foundation | f'c 3,000 psi | rebar Fy 60 ksi | soil 1,500 psf | Wood stem wall 3 1/2" | ACI 318-14

Controls: Depth Above Bars 89% used

Adequacy 18.1% (capacity to spare)

WHAT LOADS IT

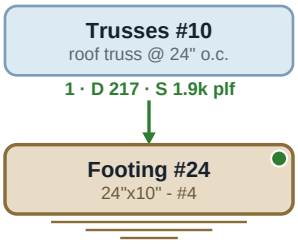

SECTION

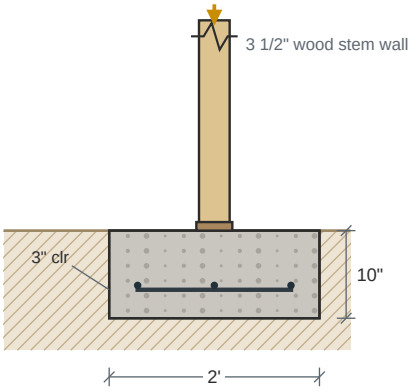

PLAN -- BOTTOM MAT

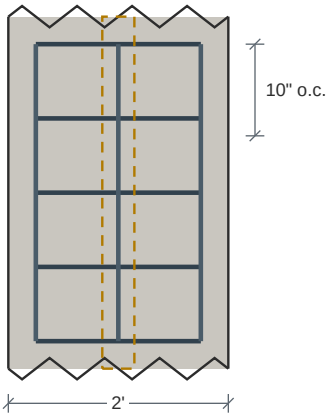

Long.(3) #4 Bars, Transv:#4 @10(in) O.C.

Carrying: Dead 217 plf Snow 1,912 plf

Design Results	Actual	Allowed	Result	Method	Load Combination
Soil Bearing Pressure (psf)	1,228	1,500	Passed (82% used)	ASD	D+S
One-Way Shear (lbs)	484	6,655	Passed (7% used)	LRFD	1.2D+1.6S+L
Moment (ft-lbs)	713	7,036	Passed (10% used)	LRFD	1.2D+1.6S+L
Depth Above Bars (in)	6	7	Passed (89% used)	code	ACI 318-14 13.3.1.2

Footing Specification

as entered on the footing, and the mat the check selected

Geometry	
Stem wall type	Wood
Footing width	2'
Footing depth	10"
Stem wall width	3 1/2"
Stem wall height	24"
Stem wall density	145 pcf
Stem wall offset	0

Footing Properties	
Steel yield strength	60,000 psi
Concrete strength	3,000 psi
Soil bearing pressure	1,500 psf
Concrete density	145 pcf
Top reinf. cover	3"
Bottom reinf. cover	3"
Side reinf. cover	3"
Aggregate diameter	3/4"

Soil Properties	
Soil depth above footing	0
Soil density	140 pcf
Soil cohesion	0 psf
Friction angle	30°
Water level	20'

Reinforcement	
Bottom mat	Long.(3) #4 Bars, Transv:#4 @10(in) O.C.
Transverse	#4 @ 10" o.c.
Longitudinal	(3) #4
Selected for	moment and minimum steel
Dowels	(3), bar size not set
Plain concrete (no reinforcing)	No
Override rebar	No
Include water level	No
Allow bearing pressure increase	No

- Soil bearing is checked at service level (ASD) and includes the footing's own weight; shear, moment and crushing at strength level (LRFD), ACI 318-14, loads combined to ASCE 7-16.
- Reinforcement is selected for the moment and for minimum steel (ACI 318-14: 0.0018 Ag for Grade 60), at no more than 3h or 18 in.

Applied Loads	Location	Trib. Width	Dead (0.90)	Snow (1.15)	Comments
1 - Uniform (PLF)	--	N/A	216.8	1,912	Linked from: Trusses #10, Support 1

Footing #25

PASSED

Continuous Footing 1' 4" wide x 10" deep -- Long.(2) #4 Bars, Transv:#4 @10(in) O.C.

Level: Foundation | f'c 3,000 psi | rebar Fy 60 ksi | soil 1,500 psf | Concrete stem wall 6" | ACI 318-14

Controls: Depth Above Bars 89% used

Adequacy 19.8% (capacity to spare)

WHAT LOADS IT

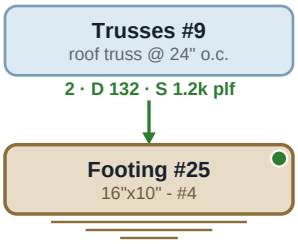

SECTION

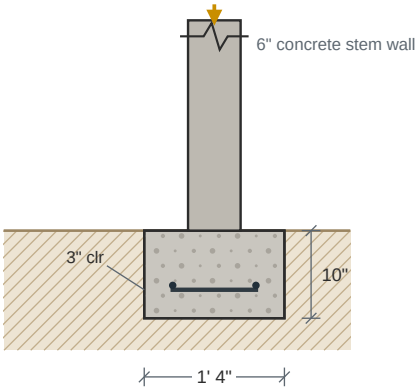

PLAN -- BOTTOM MAT

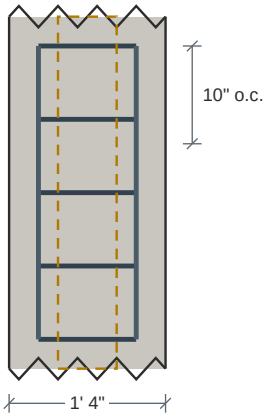

Long.(2) #4 Bars, Transv:#4 @10(in) O.C.

Carrying: Dead 132 plf Snow 1,166 plf

Design Results	Actual	Allowed	Result	Method	Load Combination
Soil Bearing Pressure (psf)	1,203	1,500	Passed (80% used)	ASD	D+S
One-Way Shear (lbs)	0	6,655	Passed (0% used)	LRFD	1.2D+1.6S+L
Moment (ft-lbs)	132	7,036	Passed (2% used)	LRFD	1.2D+1.6S+L
Depth Above Bars (in)	6	7	Passed (89% used)	code	ACI 318-14 13.3.1.2

Footing Specification

as entered on the footing, and the mat the check selected

Geometry	
Stem wall type	Concrete
Footing width	1' 4"
Footing depth	10"
Stem wall width	6"
Stem wall height	24"
Stem wall density	145 pcf
Stem wall offset	0

Footing Properties	
Steel yield strength	60,000 psi
Concrete strength	3,000 psi
Soil bearing pressure	1,500 psf
Concrete density	145 pcf
Top reinf. cover	3"
Bottom reinf. cover	3"
Side reinf. cover	3"
Aggregate diameter	3/4"

Soil Properties	
Soil depth above footing	0
Soil density	140 pcf
Soil cohesion	0 psf
Friction angle	30°
Water level	20'

Reinforcement	
Bottom mat	Long.(2) #4 Bars, Transv:#4 @10(in) O.C.
Transverse	#4 @ 10" o.c.
Longitudinal	(2) #4
Selected for	moment and minimum steel
Dowels	(3), bar size not set
Plain concrete (no reinforcing)	No
Override rebar	No
Include water level	No
Allow bearing pressure increase	No

- Soil bearing is checked at service level (ASD) and includes the footing's own weight; shear, moment and crushing at strength level (LRFD), ACI 318-14, loads combined to ASCE 7-16.
- Reinforcement is selected for the moment and for minimum steel (ACI 318-14: 0.0018 Ag for Grade 60), at no more than 3h or 18 in.

Applied Loads	Location	Trib. Width	Dead (0.90)	Snow (1.15)	Comments
1 - Uniform (PLF)	--	N/A	132.2	1,166	Linked from: Trusses #9, Support 2

Footing #26

PASSED

Continuous Footing 2' wide x 10" deep -- Long.(3) #4 Bars, Transv:#4 @10(in) O.C.

Level: Foundation | f'c 3,000 psi | rebar Fy 60 ksi | soil 1,500 psf | Concrete stem wall 6" | ACI 318-14

Controls: Depth Above Bars 89% used

Adequacy 16.1% (capacity to spare)

WHAT LOADS IT

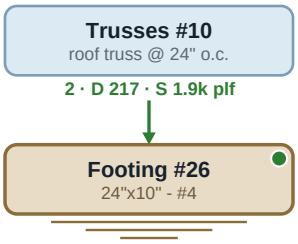

SECTION

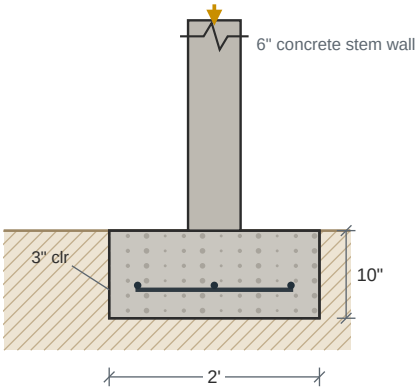

PLAN -- BOTTOM MAT

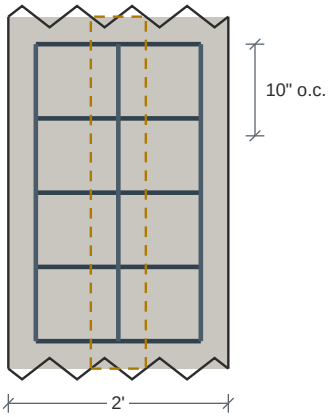

Long.(3) #4 Bars, Transv:#4 @10(in) O.C.

Carrying: Dead 217 plf Snow 1,912 plf

Design Results	Actual	Allowed	Result	Method	Load Combination
Soil Bearing Pressure (psf)	1,258	1,500	Passed (84% used)	ASD	D+S
One-Way Shear (lbs)	311	6,655	Passed (5% used)	LRFD	1.2D+1.6S+L
Moment (ft-lbs)	467	7,036	Passed (7% used)	LRFD	1.2D+1.6S+L
Depth Above Bars (in)	6	7	Passed (89% used)	code	ACI 318-14 13.3.1.2

Footing Specification

as entered on the footing, and the mat the check selected

Geometry	
Stem wall type	Concrete
Footing width	2'
Footing depth	10"
Stem wall width	6"
Stem wall height	24"
Stem wall density	145 pcf
Stem wall offset	0

Footing Properties	
Steel yield strength	60,000 psi
Concrete strength	3,000 psi
Soil bearing pressure	1,500 psf
Concrete density	145 pcf
Top reinf. cover	3"
Bottom reinf. cover	3"
Side reinf. cover	3"
Aggregate diameter	3/4"

Soil Properties	
Soil depth above footing	0
Soil density	140 pcf
Soil cohesion	0 psf
Friction angle	30°
Water level	20'

Reinforcement	
Bottom mat	Long.(3) #4 Bars, Transv:#4 @10(in) O.C.
Transverse	#4 @ 10" o.c.
Longitudinal	(3) #4
Selected for	moment and minimum steel
Dowels	(3), bar size not set
Plain concrete (no reinforcing)	No
Override rebar	No
Include water level	No
Allow bearing pressure increase	No

- Soil bearing is checked at service level (ASD) and includes the footing's own weight; shear, moment and crushing at strength level (LRFD), ACI 318-14, loads combined to ASCE 7-16.
- Reinforcement is selected for the moment and for minimum steel (ACI 318-14: 0.0018 Ag for Grade 60), at no more than 3h or 18 in.

Applied Loads	Location	Trib. Width	Dead (0.90)	Snow (1.15)	Comments
1 - Uniform (PLF)	--	N/A	216.8	1,912	Linked from: Trusses #10, Support 2

Footing #27

PASSED

Continuous Footing 2' wide x 10" deep -- Long.(3) #4 Bars, Transv:#4 @10(in) O.C.

Level: Foundation | f'c 3,000 psi | rebar Fy 60 ksi | soil 1,500 psf | Wood stem wall 3 1/2" | ACI 318-14

Controls: Depth Above Bars 89% used

Adequacy 18.1% (capacity to spare)

WHAT LOADS IT

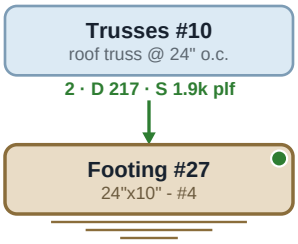

SECTION

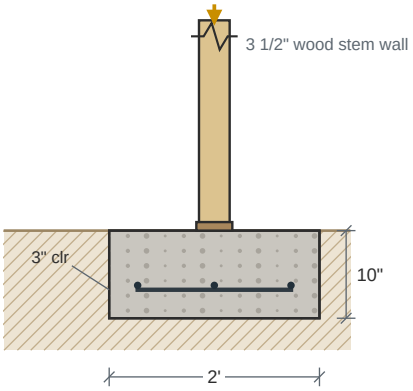

PLAN -- BOTTOM MAT

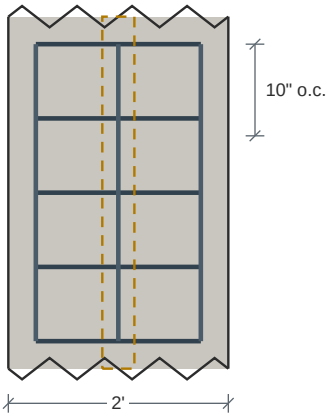

Long.(3) #4 Bars, Transv:#4 @10(in) O.C.

Carrying: Dead 217 plf Snow 1,912 plf

Design Results	Actual	Allowed	Result	Method	Load Combination
Soil Bearing Pressure (psf)	1,228	1,500	Passed (82% used)	ASD	D+S
One-Way Shear (lbs)	484	6,655	Passed (7% used)	LRFD	1.2D+1.6S+L
Moment (ft-lbs)	713	7,036	Passed (10% used)	LRFD	1.2D+1.6S+L
Depth Above Bars (in)	6	7	Passed (89% used)	code	ACI 318-14 13.3.1.2

Footing Specification

as entered on the footing, and the mat the check selected

Geometry	
Stem wall type	Wood
Footing width	2'
Footing depth	10"
Stem wall width	3 1/2"
Stem wall height	24"
Stem wall density	145 pcf
Stem wall offset	0

Footing Properties	
Steel yield strength	60,000 psi
Concrete strength	3,000 psi
Soil bearing pressure	1,500 psf
Concrete density	145 pcf
Top reinf. cover	3"
Bottom reinf. cover	3"
Side reinf. cover	3"
Aggregate diameter	3/4"

Soil Properties	
Soil depth above footing	0
Soil density	140 pcf
Soil cohesion	0 psf
Friction angle	30°
Water level	20'

Reinforcement	
Bottom mat	Long.(3) #4 Bars, Transv:#4 @10(in) O.C.
Transverse	#4 @ 10" o.c.
Longitudinal	(3) #4
Selected for	moment and minimum steel
Dowels	(3), bar size not set
Plain concrete (no reinforcing)	No
Override rebar	No
Include water level	No
Allow bearing pressure increase	No

- Soil bearing is checked at service level (ASD) and includes the footing's own weight; shear, moment and crushing at strength level (LRFD), ACI 318-14, loads combined to ASCE 7-16.
- Reinforcement is selected for the moment and for minimum steel (ACI 318-14: 0.0018 Ag for Grade 60), at no more than 3h or 18 in.

Applied Loads	Location	Trib. Width	Dead (0.90)	Snow (1.15)	Comments
1 - Uniform (PLF)	--	N/A	216.8	1,912	Linked from: Trusses #10, Support 2

Footing #28

PASSED

Continuous Footing 2' wide x 10" deep -- Long.(3) #4 Bars, Transv:#4 @10(in) O.C.

Level: Foundation | f'c 3,000 psi | rebar Fy 60 ksi | soil 1,500 psf | Wood stem wall 3 1/2" | ACI 318-14

Controls: Depth Above Bars 89% used

Adequacy 18.1% (capacity to spare)

WHAT LOADS IT

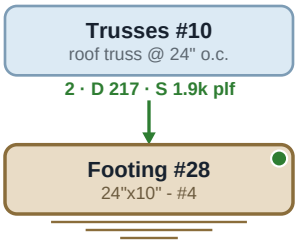

SECTION

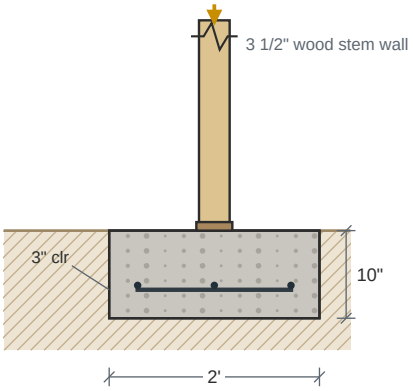

PLAN -- BOTTOM MAT

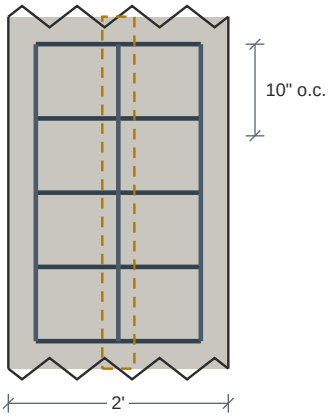

Long.(3) #4 Bars, Transv:#4 @10(in) O.C.

Carrying: Dead 217 plf Snow 1,912 plf

Design Results	Actual	Allowed	Result	Method	Load Combination
Soil Bearing Pressure (psf)	1,228	1,500	Passed (82% used)	ASD	D+S
One-Way Shear (lbs)	484	6,655	Passed (7% used)	LRFD	1.2D+1.6S+L
Moment (ft-lbs)	713	7,036	Passed (10% used)	LRFD	1.2D+1.6S+L
Depth Above Bars (in)	6	7	Passed (89% used)	code	ACI 318-14 13.3.1.2

Footing Specification

as entered on the footing, and the mat the check selected

Geometry	
Stem wall type	Wood
Footing width	2'
Footing depth	10"
Stem wall width	3 1/2"
Stem wall height	24"
Stem wall density	145 pcf
Stem wall offset	0

Footing Properties	
Steel yield strength	60,000 psi
Concrete strength	3,000 psi
Soil bearing pressure	1,500 psf
Concrete density	145 pcf
Top reinf. cover	3"
Bottom reinf. cover	3"
Side reinf. cover	3"
Aggregate diameter	3/4"

Soil Properties	
Soil depth above footing	0
Soil density	140 pcf
Soil cohesion	0 psf
Friction angle	30°
Water level	20'

Reinforcement	
Bottom mat	Long.(3) #4 Bars, Transv:#4 @10(in) O.C.
Transverse	#4 @ 10" o.c.
Longitudinal	(3) #4
Selected for	moment and minimum steel
Dowels	(3), bar size not set
Plain concrete (no reinforcing)	No
Override rebar	No
Include water level	No
Allow bearing pressure increase	No

- Soil bearing is checked at service level (ASD) and includes the footing's own weight; shear, moment and crushing at strength level (LRFD), ACI 318-14, loads combined to ASCE 7-16.
- Reinforcement is selected for the moment and for minimum steel (ACI 318-14: 0.0018 Ag for Grade 60), at no more than 3h or 18 in.

Applied Loads	Location	Trib. Width	Dead (0.90)	Snow (1.15)	Comments
1 - Uniform (PLF)	--	N/A	216.8	1,912	Linked from: Trusses #10, Support 2

Footing #29

PASSED

Continuous Footing 1' 4" wide x 10" deep -- Long.(2) #4 Bars, Transv:#4 @10(in) O.C.

Level: Foundation | f'c 3,000 psi | rebar Fy 60 ksi | soil 1,500 psf | Concrete stem wall 6" | ACI 318-14

Controls: Depth Above Bars 89% used

Adequacy 51% (capacity to spare)

WHAT LOADS IT

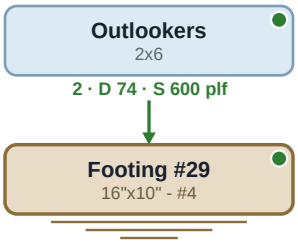

SECTION

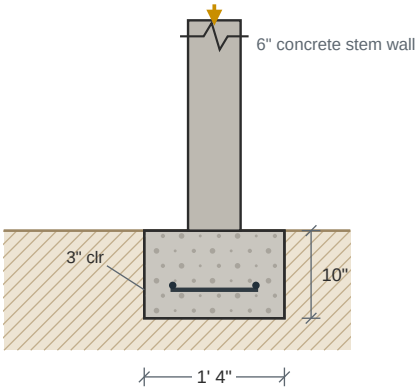

PLAN -- BOTTOM MAT

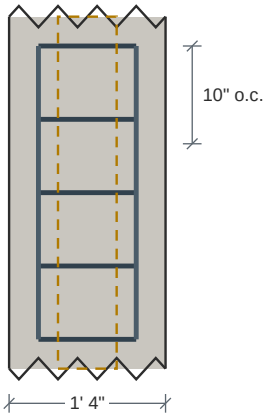

Long.(2) #4 Bars, Transv:#4 @10(in) O.C.

Carrying: Dead 74 plf Snow 600 plf

Design Results	Actual	Allowed	Result	Method	Load Combination
Soil Bearing Pressure (psf)	735	1,500	Passed (49% used)	ASD	D+S
One-Way Shear (lbs)	0	6,655	Passed (0% used)	LRFD	1.2D+1.6S+L
Moment (ft-lbs)	68	7,036	Passed (1% used)	LRFD	1.2D+1.6S+L
Depth Above Bars (in)	6	7	Passed (89% used)	code	ACI 318-14 13.3.1.2

Footing Specification

as entered on the footing, and the mat the check selected

Geometry	
Stem wall type	Concrete
Footing width	1' 4"
Footing depth	10"
Stem wall width	6"
Stem wall height	24"
Stem wall density	145 pcf
Stem wall offset	0

Footing Properties	
Steel yield strength	60,000 psi
Concrete strength	3,000 psi
Soil bearing pressure	1,500 psf
Concrete density	145 pcf
Top reinf. cover	3"
Bottom reinf. cover	3"
Side reinf. cover	3"
Aggregate diameter	3/4"

Soil Properties	
Soil depth above footing	0
Soil density	140 pcf
Soil cohesion	0 psf
Friction angle	30°
Water level	20'

Reinforcement	
Bottom mat	Long.(2) #4 Bars, Transv:#4 @10(in) O.C.
Transverse	#4 @ 10" o.c.
Longitudinal	(2) #4
Selected for	moment and minimum steel
Dowels	(3), bar size not set
Plain concrete (no reinforcing)	No
Override rebar	No
Include water level	No
Allow bearing pressure increase	No

- Soil bearing is checked at service level (ASD) and includes the footing's own weight; shear, moment and crushing at strength level (LRFD), ACI 318-14, loads combined to ASCE 7-16.
- Reinforcement is selected for the moment and for minimum steel (ACI 318-14: 0.0018 Ag for Grade 60), at no more than 3h or 18 in.

Applied Loads	Location	Trib. Width	Dead (0.90)	Snow (1.15)	Comments
1 - Uniform (PLF)	--	N/A	73.6	600	Linked from: Outlookers, Support 2

Footing #30

PASSED

Continuous Footing 1' 4" wide x 10" deep -- Long.(2) #4 Bars, Transv:#4 @10(in) O.C.

Level: Foundation | f'c 3,000 psi | rebar Fy 60 ksi | soil 1,500 psf | Concrete stem wall 6" | ACI 318-14

Controls: Depth Above Bars 89% used

Adequacy 49.2% (capacity to spare)

WHAT LOADS IT

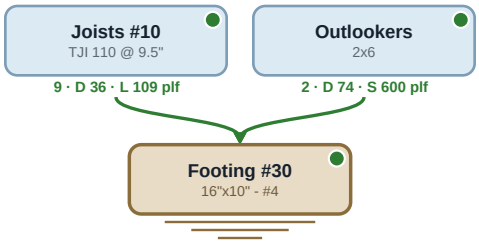

SECTION

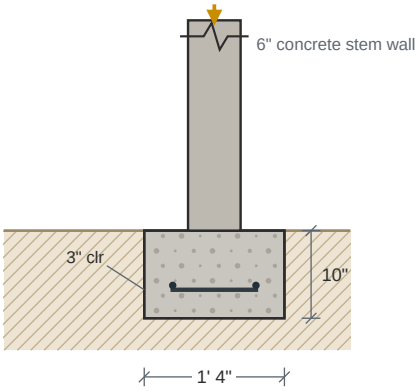

PLAN -- BOTTOM MAT

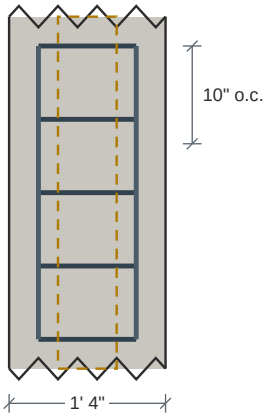

Long.(2) #4 Bars, Transv:#4 @10(in) O.C.

Carrying: Dead 109 plf Snow 600 plf Floor Live 109 plf

Design Results	Actual	Allowed	Result	Method	Load Combination
Soil Bearing Pressure (psf)	762	1,500	Passed (51% used)	ASD	D+S
One-Way Shear (lbs)	0	6,655	Passed (0% used)	LRFD	1.2D+1.6S+L
Moment (ft-lbs)	78	7,036	Passed (1% used)	LRFD	1.2D+1.6S+L
Depth Above Bars (in)	6	7	Passed (89% used)	code	ACI 318-14 13.3.1.2

Footing Specification

as entered on the footing, and the mat the check selected

Geometry	
Stem wall type	Concrete
Footing width	1' 4"
Footing depth	10"
Stem wall width	6"
Stem wall height	24"
Stem wall density	145 pcf
Stem wall offset	0

Footing Properties	
Steel yield strength	60,000 psi
Concrete strength	3,000 psi
Soil bearing pressure	1,500 psf
Concrete density	145 pcf
Top reinf. cover	3"
Bottom reinf. cover	3"
Side reinf. cover	3"
Aggregate diameter	3/4"

Soil Properties	
Soil depth above footing	0
Soil density	140 pcf
Soil cohesion	0 psf
Friction angle	30°
Water level	20'

Reinforcement	
Bottom mat	Long.(2) #4 Bars, Transv:#4 @10(in) O.C.
Transverse	#4 @ 10" o.c.
Longitudinal	(2) #4
Selected for	moment and minimum steel
Dowels	(3), bar size not set
Plain concrete (no reinforcing)	No
Override rebar	No
Include water level	No
Allow bearing pressure increase	No

- Soil bearing is checked at service level (ASD) and includes the footing's own weight; shear, moment and crushing at strength level (LRFD), ACI 318-14, loads combined to ASCE 7-16.
- Reinforcement is selected for the moment and for minimum steel (ACI 318-14: 0.0018 Ag for Grade 60), at no more than 3h or 18 in.

Applied Loads	Location	Trib. Width	Dead (0.90)	Floor Live (1.00)	Snow (1.15)	Comments
1 - Uniform (PLF)	--	N/A	73.6	--	600	Linked from: Outlookers, Support 2
2 - Uniform (PLF)	--	N/A	35.8	109	--	Linked from: Joists #10, Support 9

Footing #31

PASSED

Continuous Footing 2' wide x 10" deep -- Long.(3) #4 Bars, Transv:#4 @10(in) O.C.

Level: Foundation | f'c 3,000 psi | rebar Fy 60 ksi | soil 1,500 psf | Concrete stem wall 6" | ACI 318-14

Controls: Depth Above Bars 89% used

Adequacy 28.9% (capacity to spare)

WHAT LOADS IT

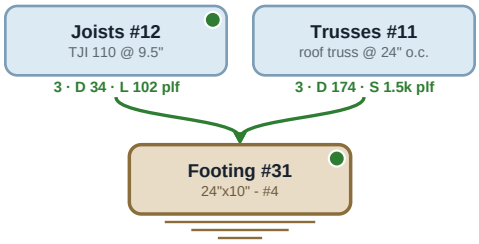

SECTION

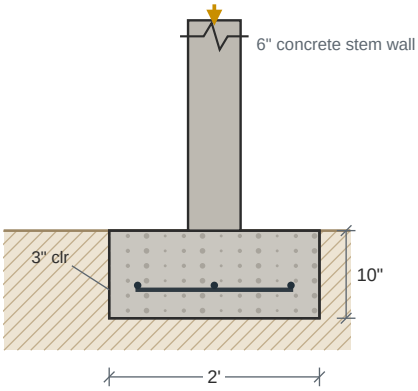

PLAN -- BOTTOM MAT

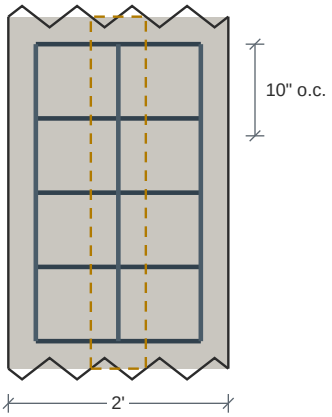

Long.(3) #4 Bars, Transv:#4 @10(in) O.C.

Carrying: Dead 208 plf Snow 1,538 plf Floor Live 102 plf

Design Results	Actual	Allowed	Result	Method	Load Combination
Soil Bearing Pressure (psf)	1,066	1,500	Passed (71% used)	ASD	D+S
One-Way Shear (lbs)	264	6,655	Passed (4% used)	LRFD	1.2D+1.6S+L
Moment (ft-lbs)	395	7,036	Passed (6% used)	LRFD	1.2D+1.6S+L
Depth Above Bars (in)	6	7	Passed (89% used)	code	ACI 318-14 13.3.1.2

Footing Specification

as entered on the footing, and the mat the check selected

Geometry	
Stem wall type	Concrete
Footing width	2'
Footing depth	10"
Stem wall width	6"
Stem wall height	24"
Stem wall density	145 pcf
Stem wall offset	0

Footing Properties	
Steel yield strength	60,000 psi
Concrete strength	3,000 psi
Soil bearing pressure	1,500 psf
Concrete density	145 pcf
Top reinf. cover	3"
Bottom reinf. cover	3"
Side reinf. cover	3"
Aggregate diameter	3/4"

Soil Properties	
Soil depth above footing	0
Soil density	140 pcf
Soil cohesion	0 psf
Friction angle	30°
Water level	20'

Reinforcement	
Bottom mat	Long.(3) #4 Bars, Transv:#4 @10(in) O.C.
Transverse	#4 @ 10" o.c.
Longitudinal	(3) #4
Selected for	moment and minimum steel
Dowels	(3), bar size not set
Plain concrete (no reinforcing)	No
Override rebar	No
Include water level	No
Allow bearing pressure increase	No

- Soil bearing is checked at service level (ASD) and includes the footing's own weight; shear, moment and crushing at strength level (LRFD), ACI 318-14, loads combined to ASCE 7-16.
- Reinforcement is selected for the moment and for minimum steel (ACI 318-14: 0.0018 Ag for Grade 60), at no more than 3h or 18 in.

Applied Loads	Location	Trib. Width	Dead (0.90)	Floor Live (1.00)	Snow (1.15)	Comments
1 - Uniform (PLF)	--	N/A	174.2	0	1,538	Linked from: Trusses #11, Support 3
2 - Uniform (PLF)	--	N/A	33.6	102.3	--	Linked from: Joists #12, Support 3

Footing #32

PASSED

Continuous Footing 2' wide x 10" deep -- Long.(3) #4 Bars, Transv:#4 @10(in) O.C.

Level: Foundation | f'c 3,000 psi | rebar Fy 60 ksi | soil 1,500 psf | Concrete stem wall 6" | ACI 318-14

Controls: Depth Above Bars 89% used

Adequacy 28.8% (capacity to spare)

WHAT LOADS IT

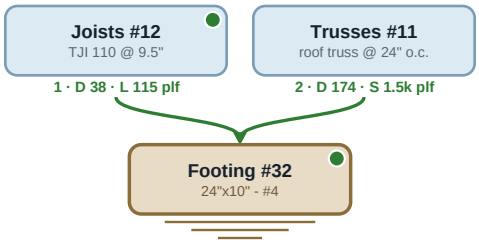

SECTION

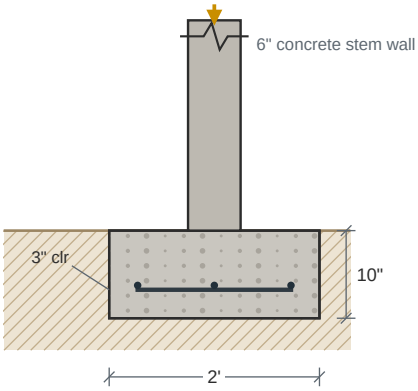

PLAN -- BOTTOM MAT

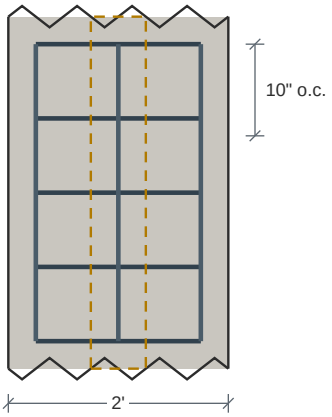

Long.(3) #4 Bars, Transv:#4 @10(in) O.C.

Carrying: Dead 212 plf Floor Live 115 plf Snow 1,538 plf

Design Results	Actual	Allowed	Result	Method	Load Combination
Soil Bearing Pressure (psf)	1,068	1,500	Passed (71% used)	ASD	D+S
One-Way Shear (lbs)	265	6,655	Passed (4% used)	LRFD	1.2D+1.6S+L
Moment (ft-lbs)	398	7,036	Passed (6% used)	LRFD	1.2D+1.6S+L
Depth Above Bars (in)	6	7	Passed (89% used)	code	ACI 318-14 13.3.1.2

Footing Specification

as entered on the footing, and the mat the check selected

Geometry	
Stem wall type	Concrete
Footing width	2'
Footing depth	10"
Stem wall width	6"
Stem wall height	24"
Stem wall density	145 pcf
Stem wall offset	0

Footing Properties	
Steel yield strength	60,000 psi
Concrete strength	3,000 psi
Soil bearing pressure	1,500 psf
Concrete density	145 pcf
Top reinf. cover	3"
Bottom reinf. cover	3"
Side reinf. cover	3"
Aggregate diameter	3/4"

Soil Properties	
Soil depth above footing	0
Soil density	140 pcf
Soil cohesion	0 psf
Friction angle	30°
Water level	20'

Reinforcement	
Bottom mat	Long.(3) #4 Bars, Transv:#4 @10(in) O.C.
Transverse	#4 @ 10" o.c.
Longitudinal	(3) #4
Selected for	moment and minimum steel
Dowels	(3), bar size not set
Plain concrete (no reinforcing)	No
Override rebar	No
Include water level	No
Allow bearing pressure increase	No

- Soil bearing is checked at service level (ASD) and includes the footing's own weight; shear, moment and crushing at strength level (LRFD), ACI 318-14, loads combined to ASCE 7-16.
- Reinforcement is selected for the moment and for minimum steel (ACI 318-14: 0.0018 Ag for Grade 60), at no more than 3h or 18 in.

Applied Loads	Location	Trib. Width	Dead (0.90)	Floor Live (1.00)	Snow (1.15)	Comments
1 - Uniform (PLF)	--	N/A	37.8	114.8	--	Linked from: Joists #12, Support 1
2 - Uniform (PLF)	--	N/A	174.2	0	1,538	Linked from: Trusses #11, Support 2

Footing #33

PASSED

Continuous Footing 2' wide x 10" deep -- Long.(3) #4 Bars, Transv:#4 @10(in) O.C.

Level: Foundation | f'c 3,000 psi | rebar Fy 60 ksi | soil 1,500 psf | Wood stem wall 3 1/2" | ACI 318-14

Controls: Depth Above Bars 89% used

Adequacy 30.8% (capacity to spare)

WHAT LOADS IT

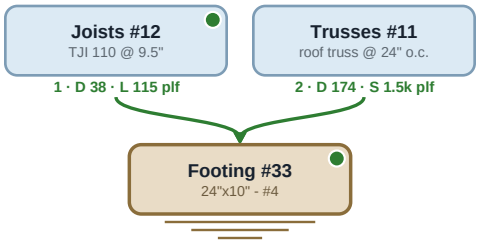

SECTION

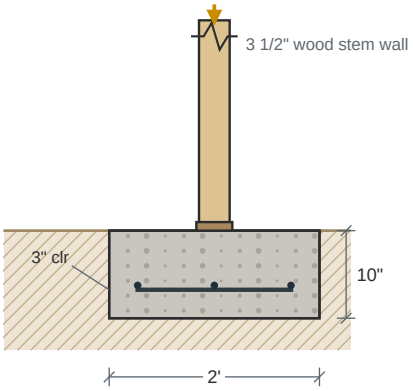

PLAN -- BOTTOM MAT

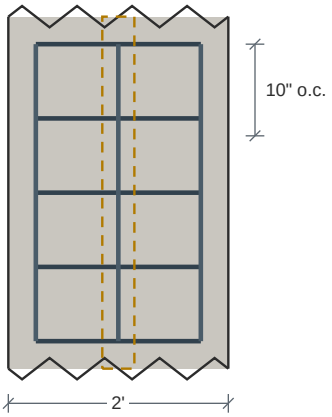

Long.(3) #4 Bars, Transv:#4 @10(in) O.C.

Carrying: Dead 212 plf Floor Live 115 plf Snow 1,538 plf

Design Results	Actual	Allowed	Result	Method	Load Combination
Soil Bearing Pressure (psf)	1,038	1,500	Passed (69% used)	ASD	D+S
One-Way Shear (lbs)	413	6,655	Passed (6% used)	LRFD	1.2D+1.6S+L
Moment (ft-lbs)	608	7,036	Passed (9% used)	LRFD	1.2D+1.6S+L
Depth Above Bars (in)	6	7	Passed (89% used)	code	ACI 318-14 13.3.1.2

Footing Specification

as entered on the footing, and the mat the check selected

Geometry	
Stem wall type	Wood
Footing width	2'
Footing depth	10"
Stem wall width	3 1/2"
Stem wall height	24"
Stem wall density	145 pcf
Stem wall offset	0

Footing Properties	
Steel yield strength	60,000 psi
Concrete strength	3,000 psi
Soil bearing pressure	1,500 psf
Concrete density	145 pcf
Top reinf. cover	3"
Bottom reinf. cover	3"
Side reinf. cover	3"
Aggregate diameter	3/4"

Soil Properties	
Soil depth above footing	0
Soil density	140 pcf
Soil cohesion	0 psf
Friction angle	30°
Water level	20'

Reinforcement	
Bottom mat	Long.(3) #4 Bars, Transv:#4 @10(in) O.C.
Transverse	#4 @ 10" o.c.
Longitudinal	(3) #4
Selected for	moment and minimum steel
Dowels	(3), bar size not set
Plain concrete (no reinforcing)	No
Override rebar	No
Include water level	No
Allow bearing pressure increase	No

- Soil bearing is checked at service level (ASD) and includes the footing's own weight; shear, moment and crushing at strength level (LRFD), ACI 318-14, loads combined to ASCE 7-16.
- Reinforcement is selected for the moment and for minimum steel (ACI 318-14: 0.0018 Ag for Grade 60), at no more than 3h or 18 in.

Applied Loads	Location	Trib. Width	Dead (0.90)	Floor Live (1.00)	Snow (1.15)	Comments
1 - Uniform (PLF)	--	N/A	37.8	114.8	--	Linked from: Joists #12, Support 1
2 - Uniform (PLF)	--	N/A	174.2	0	1,538	Linked from: Trusses #11, Support 2

Footing #34

PASSED

Continuous Footing 1' 4" wide x 10" deep -- Long.(2) #4 Bars, Transv:#4 @10(in) O.C.

Level: Foundation | f'c 3,000 psi | rebar Fy 60 ksi | soil 1,500 psf | Concrete stem wall 6" | ACI 318-14

Controls: Depth Above Bars 89% used

Adequacy 51% (capacity to spare)

WHAT LOADS IT

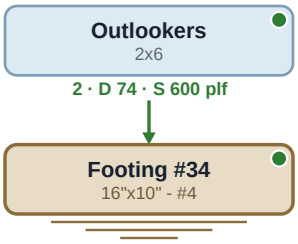

SECTION

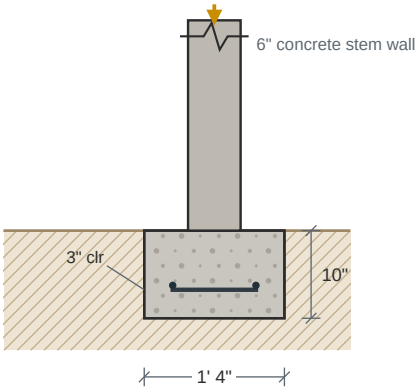

PLAN -- BOTTOM MAT

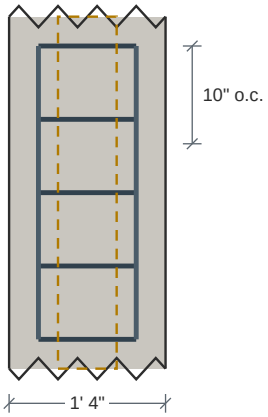

Long.(2) #4 Bars, Transv:#4 @10(in) O.C.

Carrying: Dead 74 plf Snow 600 plf

Design Results	Actual	Allowed	Result	Method	Load Combination
Soil Bearing Pressure (psf)	735	1,500	Passed (49% used)	ASD	D+S
One-Way Shear (lbs)	0	6,655	Passed (0% used)	LRFD	1.2D+1.6S+L
Moment (ft-lbs)	68	7,036	Passed (1% used)	LRFD	1.2D+1.6S+L
Depth Above Bars (in)	6	7	Passed (89% used)	code	ACI 318-14 13.3.1.2

Footing Specification

as entered on the footing, and the mat the check selected

Geometry	
Stem wall type	Concrete
Footing width	1' 4"
Footing depth	10"
Stem wall width	6"
Stem wall height	24"
Stem wall density	145 pcf
Stem wall offset	0

Footing Properties	
Steel yield strength	60,000 psi
Concrete strength	3,000 psi
Soil bearing pressure	1,500 psf
Concrete density	145 pcf
Top reinf. cover	3"
Bottom reinf. cover	3"
Side reinf. cover	3"
Aggregate diameter	3/4"

Soil Properties	
Soil depth above footing	0
Soil density	140 pcf
Soil cohesion	0 psf
Friction angle	30°
Water level	20'

Reinforcement	
Bottom mat	Long.(2) #4 Bars, Transv:#4 @10(in) O.C.
Transverse	#4 @ 10" o.c.
Longitudinal	(2) #4
Selected for	moment and minimum steel
Dowels	(3), bar size not set
Plain concrete (no reinforcing)	No
Override rebar	No
Include water level	No
Allow bearing pressure increase	No

- Soil bearing is checked at service level (ASD) and includes the footing's own weight; shear, moment and crushing at strength level (LRFD), ACI 318-14, loads combined to ASCE 7-16.
- Reinforcement is selected for the moment and for minimum steel (ACI 318-14: 0.0018 Ag for Grade 60), at no more than 3h or 18 in.

Applied Loads	Location	Trib. Width	Dead (0.90)	Snow (1.15)	Comments
1 - Uniform (PLF)	--	N/A	73.6	600	Linked from: Outlookers, Support 2

Footing #35

PASSED

Continuous Footing 1' 4" wide x 10" deep -- Long.(2) #4 Bars, Transv:#4 @10(in) O.C.

Level: Foundation | f'c 3,000 psi | rebar Fy 60 ksi | soil 1,500 psf | Wood stem wall 3 1/2" | ACI 318-14

Controls: Depth Above Bars 89% used

Adequacy 28.9% (capacity to spare)

WHAT LOADS IT

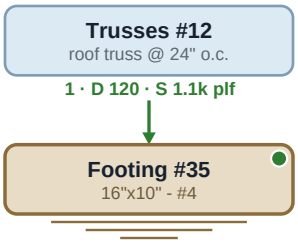

SECTION

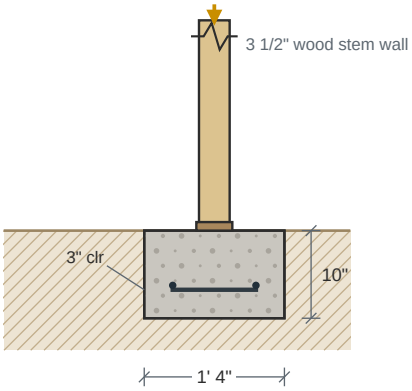

PLAN -- BOTTOM MAT

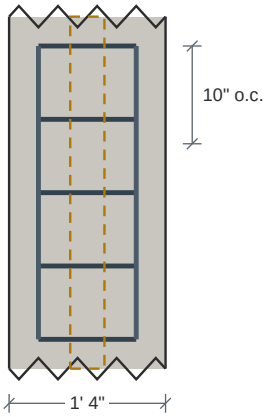

Long.(2) #4 Bars, Transv:#4 @10(in) O.C.

Carrying: Dead 120 plf Snow 1,057 plf

Design Results	Actual	Allowed	Result	Method	Load Combination
Soil Bearing Pressure (psf)	1,067	1,500	Passed (71% used)	ASD	D+S
One-Way Shear (lbs)	0	6,655	Passed (0% used)	LRFD	1.2D+1.6S+L
Moment (ft-lbs)	243	7,036	Passed (3% used)	LRFD	1.2D+1.6S+L
Depth Above Bars (in)	6	7	Passed (89% used)	code	ACI 318-14 13.3.1.2

Footing Specification

as entered on the footing, and the mat the check selected

Geometry	
Stem wall type	Wood
Footing width	1' 4"
Footing depth	10"
Stem wall width	3 1/2"
Stem wall height	24"
Stem wall density	145 pcf
Stem wall offset	0

Footing Properties	
Steel yield strength	60,000 psi
Concrete strength	3,000 psi
Soil bearing pressure	1,500 psf
Concrete density	145 pcf
Top reinf. cover	3"
Bottom reinf. cover	3"
Side reinf. cover	3"
Aggregate diameter	3/4"

Soil Properties	
Soil depth above footing	0
Soil density	140 pcf
Soil cohesion	0 psf
Friction angle	30°
Water level	20'

Reinforcement	
Bottom mat	Long.(2) #4 Bars, Transv:#4 @10(in) O.C.
Transverse	#4 @ 10" o.c.
Longitudinal	(2) #4
Selected for	moment and minimum steel
Dowels	(3), bar size not set
Plain concrete (no reinforcing)	No
Override rebar	No
Include water level	No
Allow bearing pressure increase	No

- Soil bearing is checked at service level (ASD) and includes the footing's own weight; shear, moment and crushing at strength level (LRFD), ACI 318-14, loads combined to ASCE 7-16.
- Reinforcement is selected for the moment and for minimum steel (ACI 318-14: 0.0018 Ag for Grade 60), at no more than 3h or 18 in.

Applied Loads	Location	Trib. Width	Dead (0.90)	Snow (1.15)	Comments
1 - Uniform (PLF)	--	N/A	119.8	1,057	Linked from: Trusses #12, Support 1

Footing #36

PASSED

Continuous Footing 1' 4" wide x 10" deep -- Long.(2) #4 Bars, Transv:#4 @10(in) O.C.

Level: Foundation | f'c 3,000 psi | rebar Fy 60 ksi | soil 1,500 psf | Wood stem wall 3 1/2" | ACI 318-14

Controls: Depth Above Bars 89% used

Adequacy 28.9% (capacity to spare)

WHAT LOADS IT

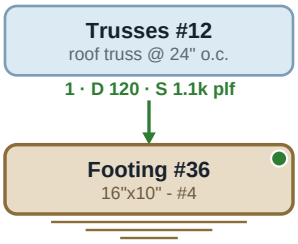

SECTION

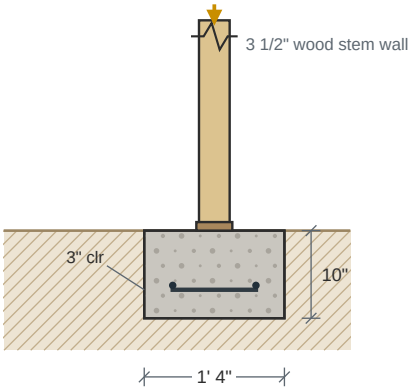

PLAN -- BOTTOM MAT

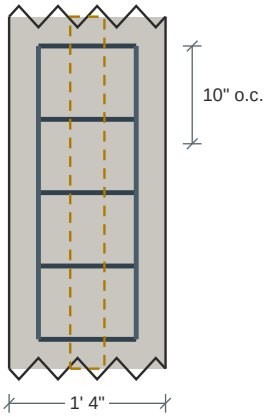

Long.(2) #4 Bars, Transv:#4 @10(in) O.C.

Carrying: Dead 120 plf Snow 1,057 plf

Design Results	Actual	Allowed	Result	Method	Load Combination
Soil Bearing Pressure (psf)	1,067	1,500	Passed (71% used)	ASD	D+S
One-Way Shear (lbs)	0	6,655	Passed (0% used)	LRFD	1.2D+1.6S+L
Moment (ft-lbs)	243	7,036	Passed (3% used)	LRFD	1.2D+1.6S+L
Depth Above Bars (in)	6	7	Passed (89% used)	code	ACI 318-14 13.3.1.2

Footing Specification

as entered on the footing, and the mat the check selected

Geometry	
Stem wall type	Wood
Footing width	1' 4"
Footing depth	10"
Stem wall width	3 1/2"
Stem wall height	24"
Stem wall density	145 pcf
Stem wall offset	0

Footing Properties	
Steel yield strength	60,000 psi
Concrete strength	3,000 psi
Soil bearing pressure	1,500 psf
Concrete density	145 pcf
Top reinf. cover	3"
Bottom reinf. cover	3"
Side reinf. cover	3"
Aggregate diameter	3/4"

Soil Properties	
Soil depth above footing	0
Soil density	140 pcf
Soil cohesion	0 psf
Friction angle	30°
Water level	20'

Reinforcement	
Bottom mat	Long.(2) #4 Bars, Transv:#4 @10(in) O.C.
Transverse	#4 @ 10" o.c.
Longitudinal	(2) #4
Selected for	moment and minimum steel
Dowels	(3), bar size not set
Plain concrete (no reinforcing)	No
Override rebar	No
Include water level	No
Allow bearing pressure increase	No

- Soil bearing is checked at service level (ASD) and includes the footing's own weight; shear, moment and crushing at strength level (LRFD), ACI 318-14, loads combined to ASCE 7-16.
- Reinforcement is selected for the moment and for minimum steel (ACI 318-14: 0.0018 Ag for Grade 60), at no more than 3h or 18 in.

Applied Loads	Location	Trib. Width	Dead (0.90)	Snow (1.15)	Comments
1 - Uniform (PLF)	--	N/A	119.8	1,057	Linked from: Trusses #12, Support 1

Footing #37

PASSED

Continuous Footing 2' 6" wide x 10" deep -- Long.(3) #4 Bars, Transv:#4 @10(in) O.C.

Level: Foundation | f'c 3,000 psi | rebar Fy 60 ksi | soil 1,500 psf | Wood stem wall 3 1/2" | ACI 318-14

Controls: Soil Bearing Pressure 94% used

Adequacy 5.8% (capacity to spare)

WHAT LOADS IT

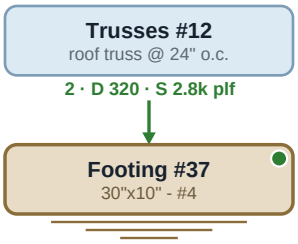

SECTION

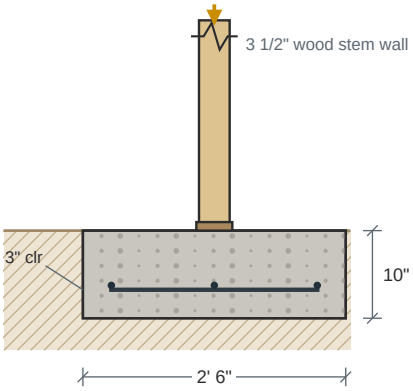

PLAN -- BOTTOM MAT

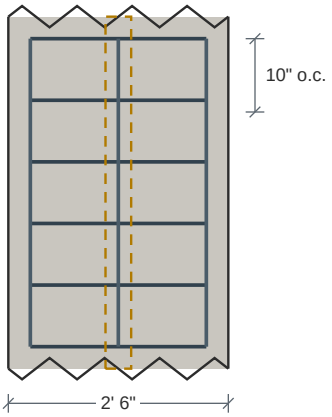

Long.(3) #4 Bars, Transv:#4 @10(in) O.C.

Carrying: Dead 320 plf Snow 2,826 plf

Design Results	Actual	Allowed	Result	Method	Load Combination
Soil Bearing Pressure (psf)	1,413	1,500	Passed (94% used)	ASD	D+S
One-Way Shear (lbs)	1,063	6,655	Passed (16% used)	LRFD	1.2D+1.6S+L
Moment (ft-lbs)	1,359	7,036	Passed (19% used)	LRFD	1.2D+1.6S+L
Depth Above Bars (in)	6	7	Passed (89% used)	code	ACI 318-14 13.3.1.2

Footing Specification

as entered on the footing, and the mat the check selected

Geometry	
Stem wall type	Wood
Footing width	2' 6"
Footing depth	10"
Stem wall width	3 1/2"
Stem wall height	24"
Stem wall density	145 pcf
Stem wall offset	0

Footing Properties	
Steel yield strength	60,000 psi
Concrete strength	3,000 psi
Soil bearing pressure	1,500 psf
Concrete density	145 pcf
Top reinf. cover	3"
Bottom reinf. cover	3"
Side reinf. cover	3"
Aggregate diameter	3/4"

Soil Properties	
Soil depth above footing	0
Soil density	140 pcf
Soil cohesion	0 psf
Friction angle	30°
Water level	20'

Reinforcement	
Bottom mat	Long.(3) #4 Bars, Transv:#4 @10(in) O.C.
Transverse	#4 @ 10" o.c.
Longitudinal	(3) #4
Selected for	moment and minimum steel
Dowels	(3), bar size not set
Plain concrete (no reinforcing)	No
Override rebar	No
Include water level	No
Allow bearing pressure increase	No

- Soil bearing is checked at service level (ASD) and includes the footing's own weight; shear, moment and crushing at strength level (LRFD), ACI 318-14, loads combined to ASCE 7-16.
- Reinforcement is selected for the moment and for minimum steel (ACI 318-14: 0.0018 Ag for Grade 60), at no more than 3h or 18 in.

Applied Loads	Location	Trib. Width	Dead (0.90)	Snow (1.15)	Comments
1 - Uniform (PLF)	--	N/A	320.3	2,826	Linked from: Trusses #12, Support 2

Footing #38

PASSED

Continuous Footing 2' 6" wide x 10" deep -- Long.(3) #4 Bars, Transv:#4 @10(in) O.C.

Level: Foundation | f'c 3,000 psi | rebar Fy 60 ksi | soil 1,500 psf | Wood stem wall 3 1/2" | ACI 318-14

Controls: Soil Bearing Pressure 94% used

Adequacy 5.8% (capacity to spare)

WHAT LOADS IT

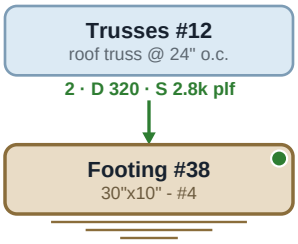

SECTION

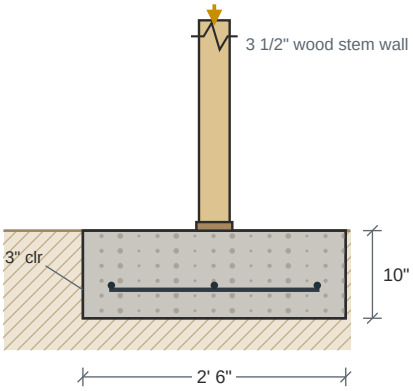

PLAN -- BOTTOM MAT

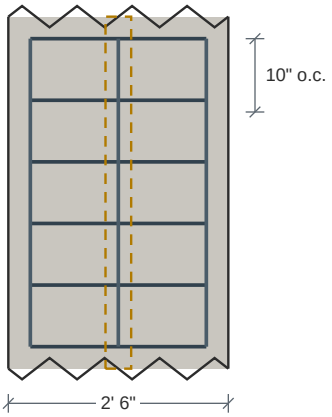

Long.(3) #4 Bars, Transv:#4 @10(in) O.C.

Carrying: Dead 320 plf Snow 2,826 plf

Design Results	Actual	Allowed	Result	Method	Load Combination
Soil Bearing Pressure (psf)	1,413	1,500	Passed (94% used)	ASD	D+S
One-Way Shear (lbs)	1,063	6,655	Passed (16% used)	LRFD	1.2D+1.6S+L
Moment (ft-lbs)	1,359	7,036	Passed (19% used)	LRFD	1.2D+1.6S+L
Depth Above Bars (in)	6	7	Passed (89% used)	code	ACI 318-14 13.3.1.2

Footing Specification

as entered on the footing, and the mat the check selected

Geometry	
Stem wall type	Wood
Footing width	2' 6"
Footing depth	10"
Stem wall width	3 1/2"
Stem wall height	24"
Stem wall density	145 pcf
Stem wall offset	0

Footing Properties	
Steel yield strength	60,000 psi
Concrete strength	3,000 psi
Soil bearing pressure	1,500 psf
Concrete density	145 pcf
Top reinf. cover	3"
Bottom reinf. cover	3"
Side reinf. cover	3"
Aggregate diameter	3/4"

Soil Properties	
Soil depth above footing	0
Soil density	140 pcf
Soil cohesion	0 psf
Friction angle	30°
Water level	20'

Reinforcement	
Bottom mat	Long.(3) #4 Bars, Transv:#4 @10(in) O.C.
Transverse	#4 @ 10" o.c.
Longitudinal	(3) #4
Selected for	moment and minimum steel
Dowels	(3), bar size not set
Plain concrete (no reinforcing)	No
Override rebar	No
Include water level	No
Allow bearing pressure increase	No

- Soil bearing is checked at service level (ASD) and includes the footing's own weight; shear, moment and crushing at strength level (LRFD), ACI 318-14, loads combined to ASCE 7-16.
- Reinforcement is selected for the moment and for minimum steel (ACI 318-14: 0.0018 Ag for Grade 60), at no more than 3h or 18 in.

Applied Loads	Location	Trib. Width	Dead (0.90)	Snow (1.15)	Comments
1 - Uniform (PLF)	--	N/A	320.3	2,826	Linked from: Trusses #12, Support 2

Footing #39

PASSED

Continuous Footing 1' 4" wide x 10" deep -- Long.(2) #4 Bars, Transv:#4 @10(in) O.C.

Level: Foundation | f'c 3,000 psi | rebar Fy 60 ksi | soil 1,500 psf | Concrete stem wall 6" | ACI 318-14

Controls: Depth Above Bars 89% used

Adequacy 29.5% (capacity to spare)

WHAT LOADS IT

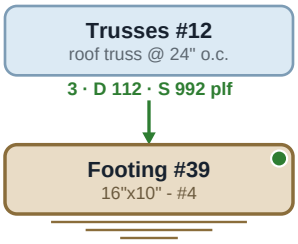

SECTION

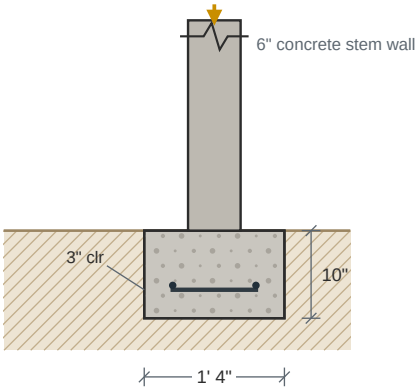

PLAN -- BOTTOM MAT

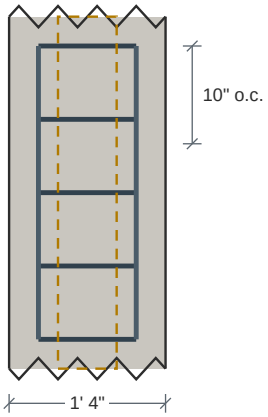

Long.(2) #4 Bars, Transv:#4 @10(in) O.C.

Carrying: Dead 112 plf Snow 992 plf

Design Results	Actual	Allowed	Result	Method	Load Combination
Soil Bearing Pressure (psf)	1,058	1,500	Passed (71% used)	ASD	D+S
One-Way Shear (lbs)	0	6,655	Passed (0% used)	LRFD	1.2D+1.6S+L
Moment (ft-lbs)	112	7,036	Passed (2% used)	LRFD	1.2D+1.6S+L
Depth Above Bars (in)	6	7	Passed (89% used)	code	ACI 318-14 13.3.1.2

Footing Specification

as entered on the footing, and the mat the check selected

Geometry	
Stem wall type	Concrete
Footing width	1' 4"
Footing depth	10"
Stem wall width	6"
Stem wall height	24"
Stem wall density	145 pcf
Stem wall offset	0

Footing Properties	
Steel yield strength	60,000 psi
Concrete strength	3,000 psi
Soil bearing pressure	1,500 psf
Concrete density	145 pcf
Top reinf. cover	3"
Bottom reinf. cover	3"
Side reinf. cover	3"
Aggregate diameter	3/4"

Soil Properties	
Soil depth above footing	0
Soil density	140 pcf
Soil cohesion	0 psf
Friction angle	30°
Water level	20'

Reinforcement	
Bottom mat	Long.(2) #4 Bars, Transv:#4 @10(in) O.C.
Transverse	#4 @ 10" o.c.
Longitudinal	(2) #4
Selected for	moment and minimum steel
Dowels	(3), bar size not set
Plain concrete (no reinforcing)	No
Override rebar	No
Include water level	No
Allow bearing pressure increase	No

- Soil bearing is checked at service level (ASD) and includes the footing's own weight; shear, moment and crushing at strength level (LRFD), ACI 318-14, loads combined to ASCE 7-16.
- Reinforcement is selected for the moment and for minimum steel (ACI 318-14: 0.0018 Ag for Grade 60), at no more than 3h or 18 in.

Applied Loads	Location	Trib. Width	Dead (0.90)	Snow (1.15)	Comments
1 - Uniform (PLF)	--	N/A	112.4	992.2	Linked from: Trusses #12, Support 3

Footing #40

PASSED

Continuous Footing 1' 4" wide x 10" deep -- Long.(2) #4 Bars, Transv:#4 @10(in) O.C.

Level: Foundation | f'c 3,000 psi | rebar Fy 60 ksi | soil 1,500 psf | Concrete stem wall 6" | ACI 318-14

Controls: Depth Above Bars 89% used

Adequacy 51% (capacity to spare)

WHAT LOADS IT

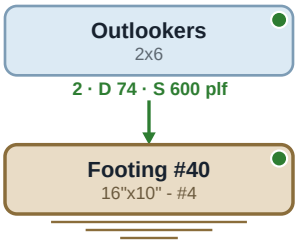

SECTION

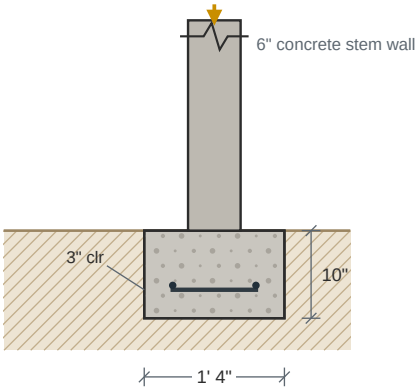

PLAN -- BOTTOM MAT

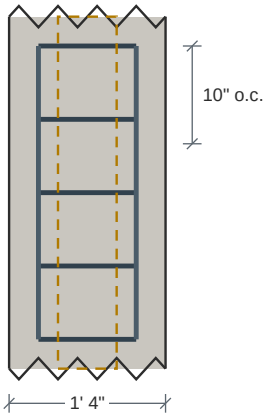

Long.(2) #4 Bars, Transv:#4 @10(in) O.C.

Carrying: Dead 74 plf Snow 600 plf

Design Results	Actual	Allowed	Result	Method	Load Combination
Soil Bearing Pressure (psf)	735	1,500	Passed (49% used)	ASD	D+S
One-Way Shear (lbs)	0	6,655	Passed (0% used)	LRFD	1.2D+1.6S+L
Moment (ft-lbs)	68	7,036	Passed (1% used)	LRFD	1.2D+1.6S+L
Depth Above Bars (in)	6	7	Passed (89% used)	code	ACI 318-14 13.3.1.2

Footing Specification

as entered on the footing, and the mat the check selected

Geometry	
Stem wall type	Concrete
Footing width	1' 4"
Footing depth	10"
Stem wall width	6"
Stem wall height	24"
Stem wall density	145 pcf
Stem wall offset	0

Footing Properties	
Steel yield strength	60,000 psi
Concrete strength	3,000 psi
Soil bearing pressure	1,500 psf
Concrete density	145 pcf
Top reinf. cover	3"
Bottom reinf. cover	3"
Side reinf. cover	3"
Aggregate diameter	3/4"

Soil Properties	
Soil depth above footing	0
Soil density	140 pcf
Soil cohesion	0 psf
Friction angle	30°
Water level	20'

Reinforcement	
Bottom mat	Long.(2) #4 Bars, Transv:#4 @10(in) O.C.
Transverse	#4 @ 10" o.c.
Longitudinal	(2) #4
Selected for	moment and minimum steel
Dowels	(3), bar size not set
Plain concrete (no reinforcing)	No
Override rebar	No
Include water level	No
Allow bearing pressure increase	No

- Soil bearing is checked at service level (ASD) and includes the footing's own weight; shear, moment and crushing at strength level (LRFD), ACI 318-14, loads combined to ASCE 7-16.
- Reinforcement is selected for the moment and for minimum steel (ACI 318-14: 0.0018 Ag for Grade 60), at no more than 3h or 18 in.

Applied Loads	Location	Trib. Width	Dead (0.90)	Snow (1.15)	Comments
1 - Uniform (PLF)	--	N/A	73.6	600	Linked from: Outlookers, Support 2

Footing #41

PASSED

Continuous Footing 2' wide x 10" deep -- Long.(3) #4 Bars, Transv:#4 @10(in) O.C.

Level: Foundation | f'c 3,000 psi | rebar Fy 60 ksi | soil 1,500 psf | Wood stem wall 3 1/2" | ACI 318-14

Controls: Soil Bearing Pressure 97% used

Adequacy 3.4% (capacity to spare)

WHAT LOADS IT

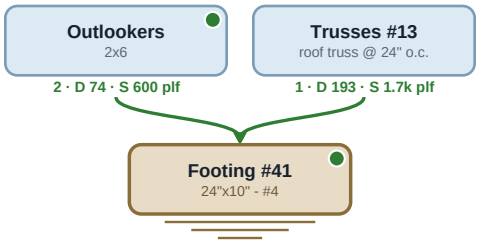

SECTION

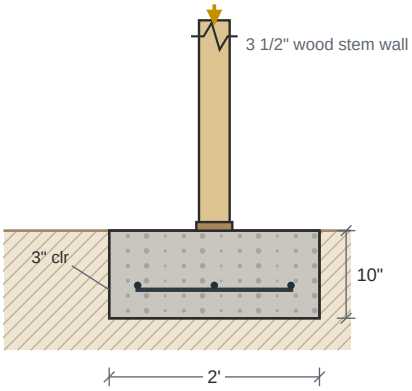

PLAN -- BOTTOM MAT

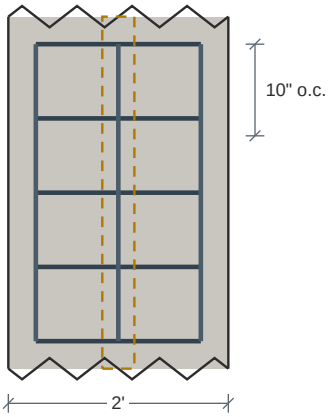

Long.(3) #4 Bars, Transv:#4 @10(in) O.C.

Carrying: Dead 267 plf Snow 2,305 plf

Design Results	Actual	Allowed	Result	Method	Load Combination
Soil Bearing Pressure (psf)	1,449	1,500	Passed (97% used)	ASD	D+S
One-Way Shear (lbs)	584	6,655	Passed (9% used)	LRFD	1.2D+1.6S+L
Moment (ft-lbs)	861	7,036	Passed (12% used)	LRFD	1.2D+1.6S+L
Depth Above Bars (in)	6	7	Passed (89% used)	code	ACI 318-14 13.3.1.2

Footing Specification

as entered on the footing, and the mat the check selected

Geometry	
Stem wall type	Wood
Footing width	2'
Footing depth	10"
Stem wall width	3 1/2"
Stem wall height	24"
Stem wall density	145 pcf
Stem wall offset	0

Footing Properties	
Steel yield strength	60,000 psi
Concrete strength	3,000 psi
Soil bearing pressure	1,500 psf
Concrete density	145 pcf
Top reinf. cover	3"
Bottom reinf. cover	3"
Side reinf. cover	3"
Aggregate diameter	3/4"

Soil Properties	
Soil depth above footing	0
Soil density	140 pcf
Soil cohesion	0 psf
Friction angle	30°
Water level	20'

Reinforcement	
Bottom mat	Long.(3) #4 Bars, Transv:#4 @10(in) O.C.
Transverse	#4 @ 10" o.c.
Longitudinal	(3) #4
Selected for	moment and minimum steel
Dowels	(3), bar size not set
Plain concrete (no reinforcing)	No
Override rebar	No
Include water level	No
Allow bearing pressure increase	No

- Soil bearing is checked at service level (ASD) and includes the footing's own weight; shear, moment and crushing at strength level (LRFD), ACI 318-14, loads combined to ASCE 7-16.
- Reinforcement is selected for the moment and for minimum steel (ACI 318-14: 0.0018 Ag for Grade 60), at no more than 3h or 18 in.

Applied Loads	Location	Trib. Width	Dead (0.90)	Snow (1.15)	Comments
1 - Uniform (PLF)	--	N/A	193.2	1,705	Linked from: Trusses #13, Support 1
2 - Uniform (PLF)	--	N/A	73.6	600	Linked from: Outlookers, Support 2

Footing #42

PASSED

Continuous Footing 2' wide x 10" deep -- Long.(3) #4 Bars, Transv:#4 @10(in) O.C.

Level: Foundation | f'c 3,000 psi | rebar Fy 60 ksi | soil 1,500 psf | Concrete stem wall 6" | ACI 318-14

Controls: Soil Bearing Pressure 92% used

Adequacy 8.4% (capacity to spare)

WHAT LOADS IT

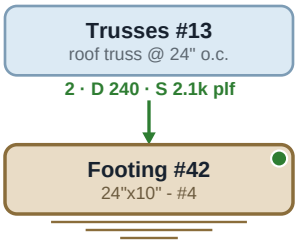

SECTION

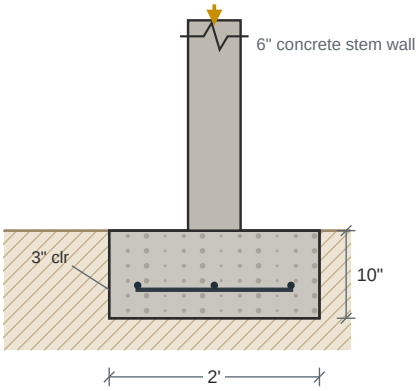

PLAN -- BOTTOM MAT

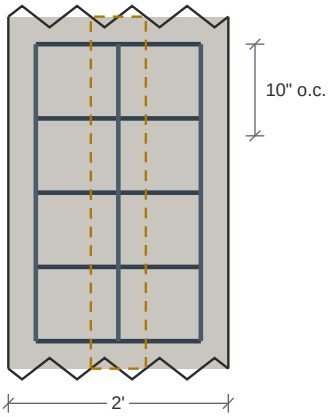

Long.(3) #4 Bars, Transv:#4 @10(in) O.C.

Carrying: Dead 240 plf Snow 2,120 plf

Design Results	Actual	Allowed	Result	Method	Load Combination
Soil Bearing Pressure (psf)	1,374	1,500	Passed (92% used)	ASD	D+S
One-Way Shear (lbs)	345	6,655	Passed (5% used)	LRFD	1.2D+1.6S+L
Moment (ft-lbs)	518	7,036	Passed (7% used)	LRFD	1.2D+1.6S+L
Depth Above Bars (in)	6	7	Passed (89% used)	code	ACI 318-14 13.3.1.2

Footing Specification

as entered on the footing, and the mat the check selected

Geometry	
Stem wall type	Concrete
Footing width	2'
Footing depth	10"
Stem wall width	6"
Stem wall height	24"
Stem wall density	145 pcf
Stem wall offset	0

Footing Properties	
Steel yield strength	60,000 psi
Concrete strength	3,000 psi
Soil bearing pressure	1,500 psf
Concrete density	145 pcf
Top reinf. cover	3"
Bottom reinf. cover	3"
Side reinf. cover	3"
Aggregate diameter	3/4"

Soil Properties	
Soil depth above footing	0
Soil density	140 pcf
Soil cohesion	0 psf
Friction angle	30°
Water level	20'

Reinforcement	
Bottom mat	Long.(3) #4 Bars, Transv:#4 @10(in) O.C.
Transverse	#4 @ 10" o.c.
Longitudinal	(3) #4
Selected for	moment and minimum steel
Dowels	(3), bar size not set
Plain concrete (no reinforcing)	No
Override rebar	No
Include water level	No
Allow bearing pressure increase	No

- Soil bearing is checked at service level (ASD) and includes the footing's own weight; shear, moment and crushing at strength level (LRFD), ACI 318-14, loads combined to ASCE 7-16.
- Reinforcement is selected for the moment and for minimum steel (ACI 318-14: 0.0018 Ag for Grade 60), at no more than 3h or 18 in.

Applied Loads	Location	Trib. Width	Dead (0.90)	Snow (1.15)	Comments
1 - Uniform (PLF)	--	N/A	240.3	2,120	Linked from: Trusses #13, Support 2

Footing #43

PASSED

Continuous Footing 1' 4" wide x 10" deep -- Long.(2) #4 Bars, Transv:#4 @10(in) O.C.

Level: Foundation | f'c 3,000 psi | rebar Fy 60 ksi | soil 1,500 psf | Wood stem wall 3 1/2" | ACI 318-14

Controls: Depth Above Bars 89% used

Adequacy 54% (capacity to spare)

WHAT LOADS IT

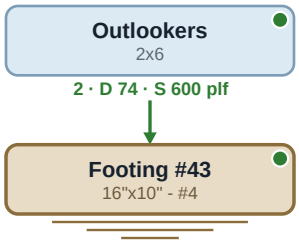

SECTION

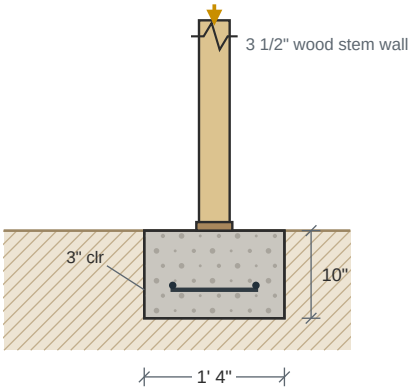

PLAN -- BOTTOM MAT

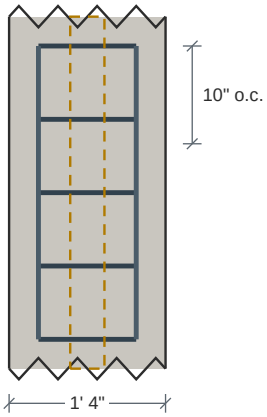

Long.(2) #4 Bars, Transv:#4 @10(in) O.C.

Carrying: Dead 74 plf Snow 600 plf

Design Results	Actual	Allowed	Result	Method	Load Combination
Soil Bearing Pressure (psf)	689	1,500	Passed (46% used)	ASD	D+S
One-Way Shear (lbs)	0	6,655	Passed (0% used)	LRFD	1.2D+1.6S+L
Moment (ft-lbs)	139	7,036	Passed (2% used)	LRFD	1.2D+1.6S+L
Depth Above Bars (in)	6	7	Passed (89% used)	code	ACI 318-14 13.3.1.2

Footing Specification

as entered on the footing, and the mat the check selected

Geometry	
Stem wall type	Wood
Footing width	1' 4"
Footing depth	10"
Stem wall width	3 1/2"
Stem wall height	24"
Stem wall density	145 pcf
Stem wall offset	0

Footing Properties	
Steel yield strength	60,000 psi
Concrete strength	3,000 psi
Soil bearing pressure	1,500 psf
Concrete density	145 pcf
Top reinf. cover	3"
Bottom reinf. cover	3"
Side reinf. cover	3"
Aggregate diameter	3/4"

Soil Properties	
Soil depth above footing	0
Soil density	140 pcf
Soil cohesion	0 psf
Friction angle	30°
Water level	20'

Reinforcement	
Bottom mat	Long.(2) #4 Bars, Transv:#4 @10(in) O.C.
Transverse	#4 @ 10" o.c.
Longitudinal	(2) #4
Selected for	moment and minimum steel
Dowels	(3), bar size not set
Plain concrete (no reinforcing)	No
Override rebar	No
Include water level	No
Allow bearing pressure increase	No

- Soil bearing is checked at service level (ASD) and includes the footing's own weight; shear, moment and crushing at strength level (LRFD), ACI 318-14, loads combined to ASCE 7-16.
- Reinforcement is selected for the moment and for minimum steel (ACI 318-14: 0.0018 Ag for Grade 60), at no more than 3h or 18 in.

Applied Loads	Location	Trib. Width	Dead (0.90)	Snow (1.15)	Comments
1 - Uniform (PLF)	--	N/A	73.6	600	Linked from: Outlookers, Support 2

Footing #44

PASSED

Continuous Footing 1' 4" wide x 10" deep -- Long.(2) #4 Bars, Transv:#4 @10(in) O.C.

Level: Foundation | f'c 3,000 psi | rebar Fy 60 ksi | soil 1,500 psf | Concrete stem wall 6" | ACI 318-14

Controls: Soil Bearing Pressure 93% used
Adequacy 7.3% (capacity to spare)

WHAT LOADS IT

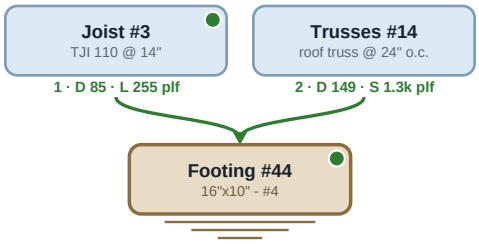

SECTION

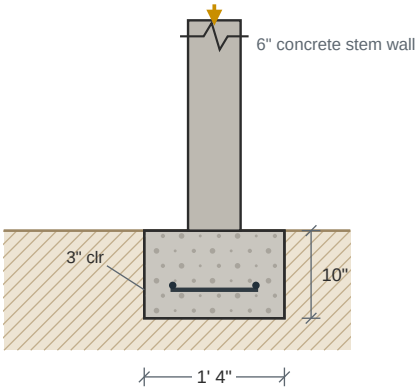

PLAN -- BOTTOM MAT

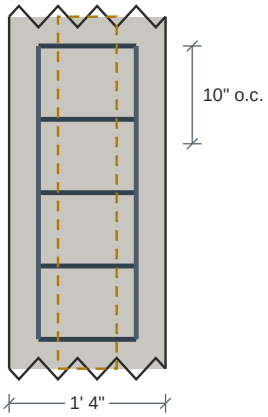

Long.(2) #4 Bars, Transv:#4 @10(in) O.C.

Carrying: Dead 234 plf Snow 1,314 plf Floor Live 255 plf

Design Results	Actual	Allowed	Result	Method	Load Combination
Soil Bearing Pressure (psf)	1,391	1,500	Passed (93% used)	ASD	D+S
One-Way Shear (lbs)	0	6,655	Passed (0% used)	LRFD	1.2D+1.6S+L
Moment (ft-lbs)	172	7,036	Passed (2% used)	LRFD	1.2D+1.6S+L
Depth Above Bars (in)	6	7	Passed (89% used)	code	ACI 318-14 13.3.1.2

Footing Specification

as entered on the footing, and the mat the check selected

Geometry	
Stem wall type	Concrete
Footing width	1' 4"
Footing depth	10"
Stem wall width	6"
Stem wall height	24"
Stem wall density	145 pcf
Stem wall offset	0

Footing Properties	
Steel yield strength	60,000 psi
Concrete strength	3,000 psi
Soil bearing pressure	1,500 psf
Concrete density	145 pcf
Top reinf. cover	3"
Bottom reinf. cover	3"
Side reinf. cover	3"
Aggregate diameter	3/4"

Soil Properties	
Soil depth above footing	0
Soil density	140 pcf
Soil cohesion	0 psf
Friction angle	30°
Water level	20'

Reinforcement	
Bottom mat	Long.(2) #4 Bars, Transv:#4 @10(in) O.C.
Transverse	#4 @ 10" o.c.
Longitudinal	(2) #4
Selected for	moment and minimum steel
Dowels	(3), bar size not set
Plain concrete (no reinforcing)	No
Override rebar	No
Include water level	No
Allow bearing pressure increase	No

- Soil bearing is checked at service level (ASD) and includes the footing's own weight; shear, moment and crushing at strength level (LRFD), ACI 318-14, loads combined to ASCE 7-16.
- Reinforcement is selected for the moment and for minimum steel (ACI 318-14: 0.0018 Ag for Grade 60), at no more than 3h or 18 in.

Applied Loads	Location	Trib. Width	Dead (0.90)	Floor Live (1.00)	Snow (1.15)	Comments
1 - Uniform (PLF)	--	N/A	148.9	--	1,314	Linked from: Trusses #14, Support 2
2 - Uniform (PLF)	--	N/A	85.4	255	--	Linked from: Joist #3, Support 1

Footing #45

PASSED

Continuous Footing 1' 4" wide x 10" deep -- Long.(2) #4 Bars, Transv:#4 @10(in) O.C.

Level: Foundation | f'c 3,000 psi | rebar Fy 60 ksi | soil 1,500 psf | Concrete stem wall 6" | ACI 318-14

Controls: Depth Above Bars 89% used

Adequacy 11.5% (capacity to spare)

WHAT LOADS IT

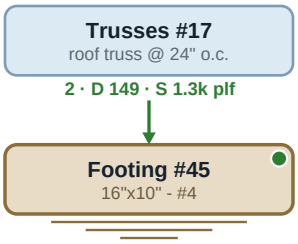

SECTION

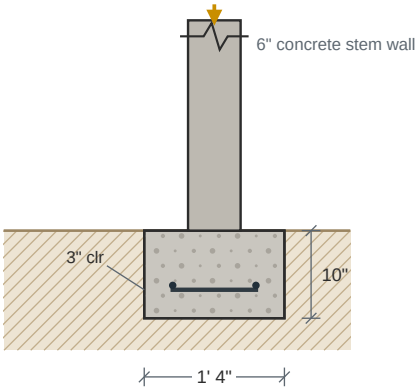

PLAN -- BOTTOM MAT

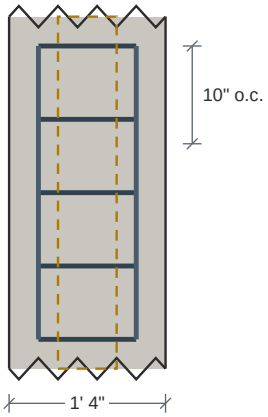

Long.(2) #4 Bars, Transv:#4 @10(in) O.C.

Carrying: Dead 149 plf Snow 1,314 plf

Design Results	Actual	Allowed	Result	Method	Load Combination
Soil Bearing Pressure (psf)	1,327	1,500	Passed (88% used)	ASD	D+S
One-Way Shear (lbs)	0	6,655	Passed (0% used)	LRFD	1.2D+1.6S+L
Moment (ft-lbs)	149	7,036	Passed (2% used)	LRFD	1.2D+1.6S+L
Depth Above Bars (in)	6	7	Passed (89% used)	code	ACI 318-14 13.3.1.2

Footing Specification

as entered on the footing, and the mat the check selected

Geometry	
Stem wall type	Concrete
Footing width	1' 4"
Footing depth	10"
Stem wall width	6"
Stem wall height	24"
Stem wall density	145 pcf
Stem wall offset	0

Footing Properties	
Steel yield strength	60,000 psi
Concrete strength	3,000 psi
Soil bearing pressure	1,500 psf
Concrete density	145 pcf
Top reinf. cover	3"
Bottom reinf. cover	3"
Side reinf. cover	3"
Aggregate diameter	3/4"

Soil Properties	
Soil depth above footing	0
Soil density	140 pcf
Soil cohesion	0 psf
Friction angle	30°
Water level	20'

Reinforcement	
Bottom mat	Long.(2) #4 Bars, Transv:#4 @10(in) O.C.
Transverse	#4 @ 10" o.c.
Longitudinal	(2) #4
Selected for	moment and minimum steel
Dowels	(3), bar size not set
Plain concrete (no reinforcing)	No
Override rebar	No
Include water level	No
Allow bearing pressure increase	No

- Soil bearing is checked at service level (ASD) and includes the footing's own weight; shear, moment and crushing at strength level (LRFD), ACI 318-14, loads combined to ASCE 7-16.
- Reinforcement is selected for the moment and for minimum steel (ACI 318-14: 0.0018 Ag for Grade 60), at no more than 3h or 18 in.

Applied Loads	Location	Trib. Width	Dead (0.90)	Snow (1.15)	Comments
1 - Uniform (PLF)	--	N/A	148.9	1,314	Linked from: Trusses #17, Support 2

Footing #46

PASSED

Continuous Footing 2' wide x 10" deep -- Long.(3) #4 Bars, Transv:#4 @10(in) O.C.

Level: Foundation | f'c 3,000 psi | rebar Fy 60 ksi | soil 1,500 psf | Concrete stem wall 6" | ACI 318-14

Controls: Soil Bearing Pressure 92% used

Adequacy 8.3% (capacity to spare)

WHAT LOADS IT

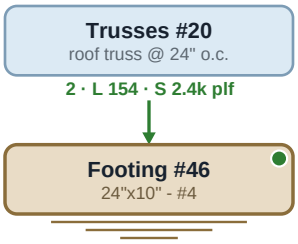

SECTION

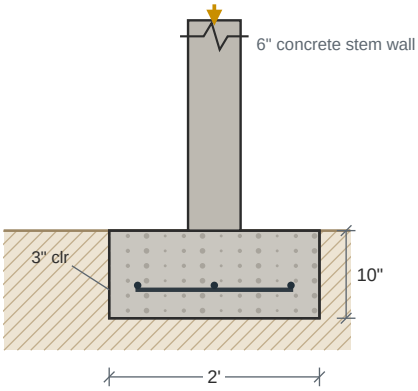

PLAN -- BOTTOM MAT

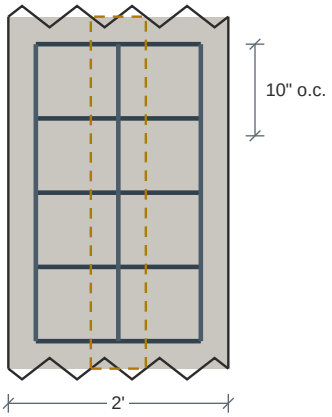

Long.(3) #4 Bars, Transv:#4 @10(in) O.C.

Carrying: Floor Live 154 plf Snow 2,366 plf

Design Results	Actual	Allowed	Result	Method	Load Combination
Soil Bearing Pressure (psf)	1,376	1,500	Passed (92% used)	ASD	D+S
One-Way Shear (lbs)	369	6,655	Passed (6% used)	LRFD	1.2D+1.6S+L
Moment (ft-lbs)	554	7,036	Passed (8% used)	LRFD	1.2D+1.6S+L
Depth Above Bars (in)	6	7	Passed (89% used)	code	ACI 318-14 13.3.1.2

Footing Specification

as entered on the footing, and the mat the check selected

Geometry	
Stem wall type	Concrete
Footing width	2'
Footing depth	10"
Stem wall width	6"
Stem wall height	24"
Stem wall density	145 pcf
Stem wall offset	0

Footing Properties	
Steel yield strength	60,000 psi
Concrete strength	3,000 psi
Soil bearing pressure	1,500 psf
Concrete density	145 pcf
Top reinf. cover	3"
Bottom reinf. cover	3"
Side reinf. cover	3"
Aggregate diameter	3/4"

Soil Properties	
Soil depth above footing	0
Soil density	140 pcf
Soil cohesion	0 psf
Friction angle	30°
Water level	20'

Reinforcement	
Bottom mat	Long.(3) #4 Bars, Transv:#4 @10(in) O.C.
Transverse	#4 @ 10" o.c.
Longitudinal	(3) #4
Selected for	moment and minimum steel
Dowels	(3), bar size not set
Plain concrete (no reinforcing)	No
Override rebar	No
Include water level	No
Allow bearing pressure increase	No

- Soil bearing is checked at service level (ASD) and includes the footing's own weight; shear, moment and crushing at strength level (LRFD), ACI 318-14, loads combined to ASCE 7-16.
- Reinforcement is selected for the moment and for minimum steel (ACI 318-14: 0.0018 Ag for Grade 60), at no more than 3h or 18 in.

Applied Loads	Location	Trib. Width	Floor Live (1.00)	Snow (1.15)	Comments
1 - Uniform (PLF)	--	N/A	153.5	2,366	Linked from: Trusses #20, Support 2

Footing #47

PASSED

Continuous Footing 3' 6" wide x 10" deep -- Long.(4) #4 Bars, Transv:#4 @10(in) O.C.

Level: Foundation | f'c 3,000 psi | rebar Fy 60 ksi | soil 1,500 psf | Concrete stem wall 6" | ACI 318-14

Controls: Soil Bearing Pressure 94% used

Adequacy 5.7% (capacity to spare)

WHAT LOADS IT

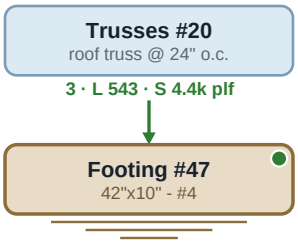

SECTION

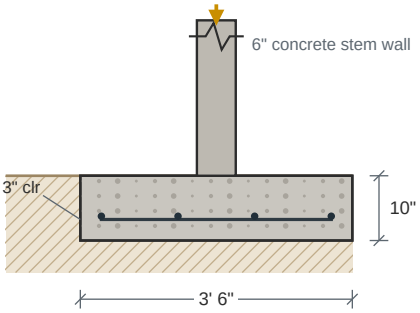

PLAN -- BOTTOM MAT

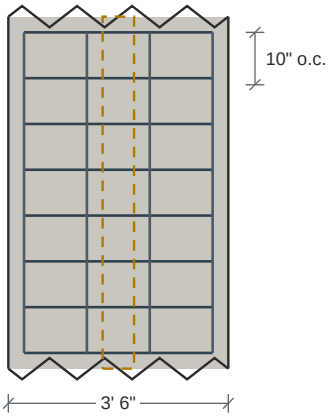

Long.(4) #4 Bars, Transv:#4 @10(in) O.C.

Carrying: Floor Live 543 plf Snow 4,380 plf

Design Results	Actual	Allowed	Result	Method	Load Combination
Soil Bearing Pressure (psf)	1,414	1,500	Passed (94% used)	ASD	D+S
One-Way Shear (lbs)	2,023	6,655	Passed (30% used)	LRFD	1.2D+1.6S+L
Moment (ft-lbs)	2,427	7,036	Passed (35% used)	LRFD	1.2D+1.6S+L
Depth Above Bars (in)	6	7	Passed (89% used)	code	ACI 318-14 13.3.1.2

Footing Specification

as entered on the footing, and the mat the check selected

Geometry	
Stem wall type	Concrete
Footing width	3' 6"
Footing depth	10"
Stem wall width	6"
Stem wall height	24"
Stem wall density	145 pcf
Stem wall offset	0

Footing Properties	
Steel yield strength	60,000 psi
Concrete strength	3,000 psi
Soil bearing pressure	1,500 psf
Concrete density	145 pcf
Top reinf. cover	3"
Bottom reinf. cover	3"
Side reinf. cover	3"
Aggregate diameter	3/4"

Soil Properties	
Soil depth above footing	0
Soil density	140 pcf
Soil cohesion	0 psf
Friction angle	30°
Water level	20'

Reinforcement	
Bottom mat	Long.(4) #4 Bars, Transv:#4 @10(in) O.C.
Transverse	#4 @ 10" o.c.
Longitudinal	(4) #4
Selected for	moment and minimum steel
Dowels	(3), bar size not set
Plain concrete (no reinforcing)	No
Override rebar	No
Include water level	No
Allow bearing pressure increase	No

- Soil bearing is checked at service level (ASD) and includes the footing's own weight; shear, moment and crushing at strength level (LRFD), ACI 318-14, loads combined to ASCE 7-16.
- Reinforcement is selected for the moment and for minimum steel (ACI 318-14: 0.0018 Ag for Grade 60), at no more than 3h or 18 in.

Applied Loads	Location	Trib. Width	Floor Live (1.00)	Snow (1.15)	Comments
1 - Uniform (PLF)	--	N/A	543.5	4,380	Linked from: Trusses #20, Support 3

Footing #48

PASSED

Continuous Footing 2' wide x 10" deep -- Long.(3) #4 Bars, Transv:#4 @10(in) O.C.

Level: Foundation | f'c 3,000 psi | rebar Fy 60 ksi | soil 1,500 psf | Concrete stem wall 6" | ACI 318-14

Controls: Soil Bearing Pressure 91% used

Adequacy 8.6% (capacity to spare)

WHAT LOADS IT

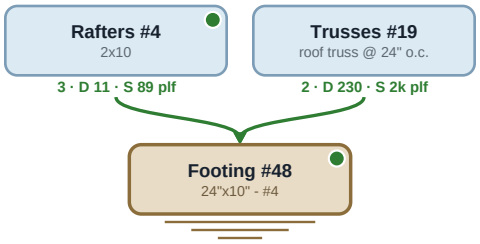

SECTION

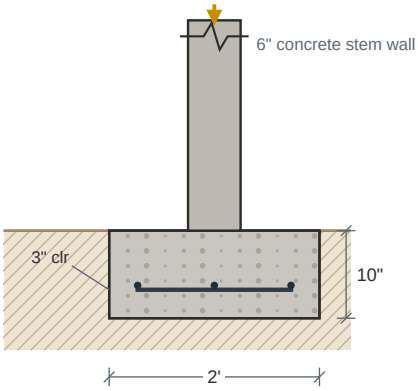

PLAN -- BOTTOM MAT

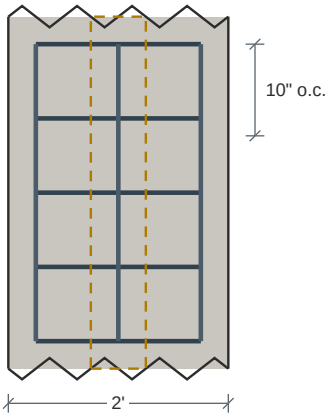

Long.(3) #4 Bars, Transv:#4 @10(in) O.C.

Carrying: Dead 240 plf Snow 2,114 plf

Design Results	Actual	Allowed	Result	Method	Load Combination
Soil Bearing Pressure (psf)	1,371	1,500	Passed (91% used)	ASD	D+S
One-Way Shear (lbs)	344	6,655	Passed (5% used)	LRFD	1.2D+1.6S+L
Moment (ft-lbs)	516	7,036	Passed (7% used)	LRFD	1.2D+1.6S+L
Depth Above Bars (in)	6	7	Passed (89% used)	code	ACI 318-14 13.3.1.2

Footing Specification

as entered on the footing, and the mat the check selected

Geometry	
Stem wall type	Concrete
Footing width	2'
Footing depth	10"
Stem wall width	6"
Stem wall height	24"
Stem wall density	145 pcf
Stem wall offset	0

Footing Properties	
Steel yield strength	60,000 psi
Concrete strength	3,000 psi
Soil bearing pressure	1,500 psf
Concrete density	145 pcf
Top reinf. cover	3"
Bottom reinf. cover	3"
Side reinf. cover	3"
Aggregate diameter	3/4"

Soil Properties	
Soil depth above footing	0
Soil density	140 pcf
Soil cohesion	0 psf
Friction angle	30°
Water level	20'

Reinforcement	
Bottom mat	Long.(3) #4 Bars, Transv:#4 @10(in) O.C.
Transverse	#4 @ 10" o.c.
Longitudinal	(3) #4
Selected for	moment and minimum steel
Dowels	(3), bar size not set
Plain concrete (no reinforcing)	No
Override rebar	No
Include water level	No
Allow bearing pressure increase	No

- Soil bearing is checked at service level (ASD) and includes the footing's own weight; shear, moment and crushing at strength level (LRFD), ACI 318-14, loads combined to ASCE 7-16.
- Reinforcement is selected for the moment and for minimum steel (ACI 318-14: 0.0018 Ag for Grade 60), at no more than 3h or 18 in.

Applied Loads	Location	Trib. Width	Dead (0.90)	Snow (1.15)	Comments
1 - Uniform (PLF)	--	N/A	229.5	2,025	Linked from: Trusses #19, Support 2
2 - Uniform (PLF)	--	N/A	10.9	89.5	Linked from: Rafters #4, Support 3

Footing #49

PASSED

Continuous Footing 1' 4" wide x 10" deep -- Long.(2) #4 Bars, Transv:#4 @10(in) O.C.

Level: Foundation | f'c 3,000 psi | rebar Fy 60 ksi | soil 1,500 psf | Concrete stem wall 6" | ACI 318-14

Controls: Depth Above Bars 89% used

Adequacy 42.8% (capacity to spare)

WHAT LOADS IT

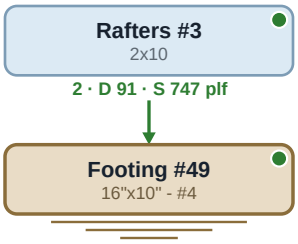

SECTION

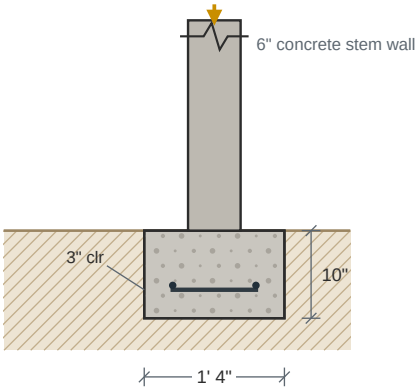

PLAN -- BOTTOM MAT

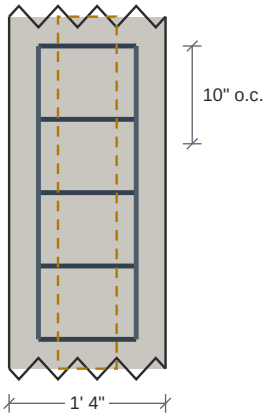

Long.(2) #4 Bars, Transv:#4 @10(in) O.C.

Carrying: Dead 91 plf Snow 747 plf

Design Results	Actual	Allowed	Result	Method	Load Combination
Soil Bearing Pressure (psf)	858	1,500	Passed (57% used)	ASD	D+S
One-Way Shear (lbs)	0	6,655	Passed (0% used)	LRFD	1.2D+1.6S+L
Moment (ft-lbs)	85	7,036	Passed (1% used)	LRFD	1.2D+1.6S+L
Depth Above Bars (in)	6	7	Passed (89% used)	code	ACI 318-14 13.3.1.2

Footing Specification

as entered on the footing, and the mat the check selected

Geometry	
Stem wall type	Concrete
Footing width	1' 4"
Footing depth	10"
Stem wall width	6"
Stem wall height	24"
Stem wall density	145 pcf
Stem wall offset	0

Footing Properties	
Steel yield strength	60,000 psi
Concrete strength	3,000 psi
Soil bearing pressure	1,500 psf
Concrete density	145 pcf
Top reinf. cover	3"
Bottom reinf. cover	3"
Side reinf. cover	3"
Aggregate diameter	3/4"

Soil Properties	
Soil depth above footing	0
Soil density	140 pcf
Soil cohesion	0 psf
Friction angle	30°
Water level	20'

Reinforcement	
Bottom mat	Long.(2) #4 Bars, Transv:#4 @10(in) O.C.
Transverse	#4 @ 10" o.c.
Longitudinal	(2) #4
Selected for	moment and minimum steel
Dowels	(3), bar size not set
Plain concrete (no reinforcing)	No
Override rebar	No
Include water level	No
Allow bearing pressure increase	No

- Soil bearing is checked at service level (ASD) and includes the footing's own weight; shear, moment and crushing at strength level (LRFD), ACI 318-14, loads combined to ASCE 7-16.
- Reinforcement is selected for the moment and for minimum steel (ACI 318-14: 0.0018 Ag for Grade 60), at no more than 3h or 18 in.

Applied Loads	Location	Trib. Width	Dead (0.90)	Snow (1.15)	Comments
1 - Uniform (PLF)	--	N/A	90.8	747.5	Linked from: Rafters #3, Support 2

Footing #50

PASSED

Continuous Footing 2' wide x 10" deep -- Long.(3) #4 Bars, Transv:#4 @10(in) O.C.

Level: Foundation | f'c 3,000 psi | rebar Fy 60 ksi | soil 1,500 psf | Concrete stem wall 6" | ACI 318-14

Controls: Depth Above Bars 89% used

Adequacy 11.4% (capacity to spare)

WHAT LOADS IT

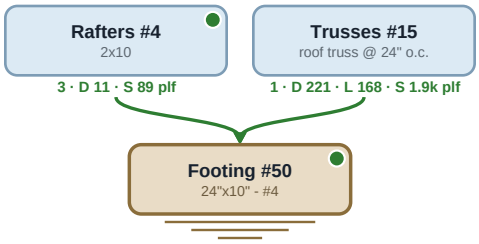

SECTION

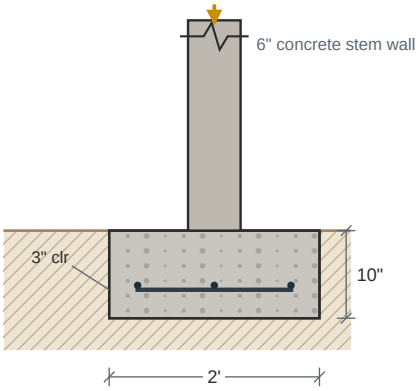

PLAN -- BOTTOM MAT

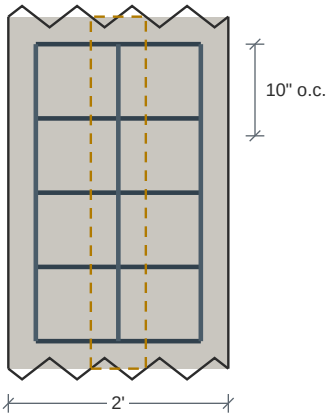

Long.(3) #4 Bars, Transv:#4 @10(in) O.C.

Carrying: Dead 232 plf Floor Live 168 plf Snow 2,039 plf

Design Results	Actual	Allowed	Result	Method	Load Combination
Soil Bearing Pressure (psf)	1,329	1,500	Passed (89% used)	ASD	D+S
One-Way Shear (lbs)	348	6,655	Passed (5% used)	LRFD	1.2D+1.6S+L
Moment (ft-lbs)	522	7,036	Passed (7% used)	LRFD	1.2D+1.6S+L
Depth Above Bars (in)	6	7	Passed (89% used)	code	ACI 318-14 13.3.1.2

Footing Specification

as entered on the footing, and the mat the check selected

Geometry	
Stem wall type	Concrete
Footing width	2'
Footing depth	10"
Stem wall width	6"
Stem wall height	24"
Stem wall density	145 pcf
Stem wall offset	0

Footing Properties	
Steel yield strength	60,000 psi
Concrete strength	3,000 psi
Soil bearing pressure	1,500 psf
Concrete density	145 pcf
Top reinf. cover	3"
Bottom reinf. cover	3"
Side reinf. cover	3"
Aggregate diameter	3/4"

Soil Properties	
Soil depth above footing	0
Soil density	140 pcf
Soil cohesion	0 psf
Friction angle	30°
Water level	20'

Reinforcement	
Bottom mat	Long.(3) #4 Bars, Transv:#4 @10(in) O.C.
Transverse	#4 @ 10" o.c.
Longitudinal	(3) #4
Selected for	moment and minimum steel
Dowels	(3), bar size not set
Plain concrete (no reinforcing)	No
Override rebar	No
Include water level	No
Allow bearing pressure increase	No

- Soil bearing is checked at service level (ASD) and includes the footing's own weight; shear, moment and crushing at strength level (LRFD), ACI 318-14, loads combined to ASCE 7-16.
- Reinforcement is selected for the moment and for minimum steel (ACI 318-14: 0.0018 Ag for Grade 60), at no more than 3h or 18 in.

Applied Loads	Location	Trib. Width	Dead (0.90)	Floor Live (1.00)	Snow (1.15)	Comments
1 - Uniform (PLF)	--	N/A	221	168.3	1,950	Linked from: Trusses #15, Support 1
2 - Uniform (PLF)	--	N/A	10.9	--	89.5	Linked from: Rafters #4, Support 3

Footing #51

PASSED

Continuous Footing 1' 4" wide x 10" deep -- Long.(2) #4 Bars, Transv:#4 @10(in) O.C.

Level: Foundation | f'c 3,000 psi | rebar Fy 60 ksi | soil 1,500 psf | Concrete stem wall 6" | ACI 318-14

Controls: Depth Above Bars 89% used

Adequacy 26.9% (capacity to spare)

WHAT LOADS IT

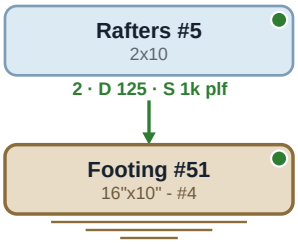

SECTION

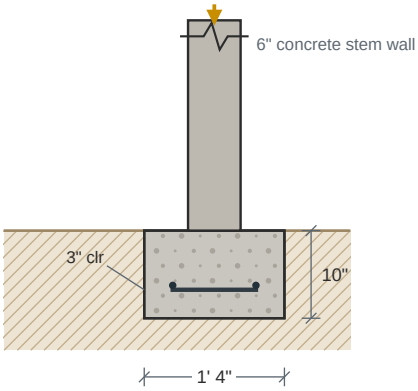

PLAN -- BOTTOM MAT

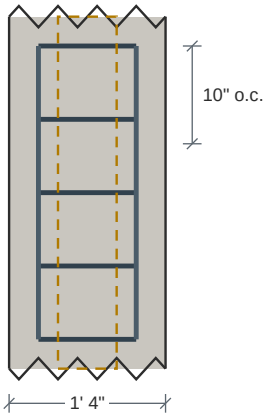

Long.(2) #4 Bars, Transv:#4 @10(in) O.C.

Carrying: Dead 125 plf Snow 1,031 plf

Design Results	Actual	Allowed	Result	Method	Load Combination
Soil Bearing Pressure (psf)	1,097	1,500	Passed (73% used)	ASD	D+S
One-Way Shear (lbs)	0	6,655	Passed (0% used)	LRFD	1.2D+1.6S+L
Moment (ft-lbs)	117	7,036	Passed (2% used)	LRFD	1.2D+1.6S+L
Depth Above Bars (in)	6	7	Passed (89% used)	code	ACI 318-14 13.3.1.2

Footing Specification

as entered on the footing, and the mat the check selected

Geometry	
Stem wall type	Concrete
Footing width	1' 4"
Footing depth	10"
Stem wall width	6"
Stem wall height	24"
Stem wall density	145 pcf
Stem wall offset	0

Footing Properties	
Steel yield strength	60,000 psi
Concrete strength	3,000 psi
Soil bearing pressure	1,500 psf
Concrete density	145 pcf
Top reinf. cover	3"
Bottom reinf. cover	3"
Side reinf. cover	3"
Aggregate diameter	3/4"

Soil Properties	
Soil depth above footing	0
Soil density	140 pcf
Soil cohesion	0 psf
Friction angle	30°
Water level	20'

Reinforcement	
Bottom mat	Long.(2) #4 Bars, Transv:#4 @10(in) O.C.
Transverse	#4 @ 10" o.c.
Longitudinal	(2) #4
Selected for	moment and minimum steel
Dowels	(3), bar size not set
Plain concrete (no reinforcing)	No
Override rebar	No
Include water level	No
Allow bearing pressure increase	No

- Soil bearing is checked at service level (ASD) and includes the footing's own weight; shear, moment and crushing at strength level (LRFD), ACI 318-14, loads combined to ASCE 7-16.
- Reinforcement is selected for the moment and for minimum steel (ACI 318-14: 0.0018 Ag for Grade 60), at no more than 3h or 18 in.

Applied Loads	Location	Trib. Width	Dead (0.90)	Snow (1.15)	Comments
1 - Uniform (PLF)	--	N/A	125.2	1,031	Linked from: Rafters #5, Support 2

Footing #52

PASSED

Continuous Footing 1' 4" wide x 10" deep -- Long.(2) #4 Bars, Transv:#4 @10(in) O.C.

Level: Foundation | f'c 3,000 psi | rebar Fy 60 ksi | soil 1,500 psf | Concrete stem wall 6" | ACI 318-14

Controls: Depth Above Bars 89% used

Adequacy 51% (capacity to spare)

WHAT LOADS IT

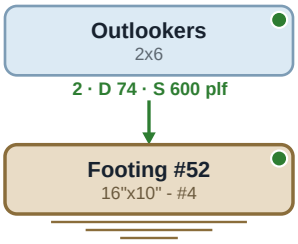

SECTION

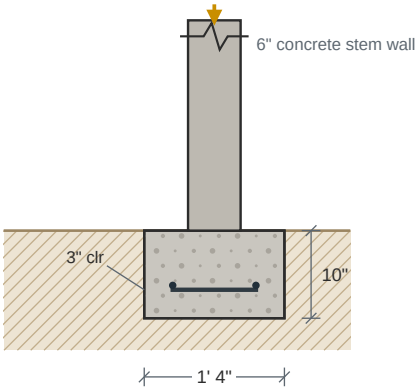

PLAN -- BOTTOM MAT

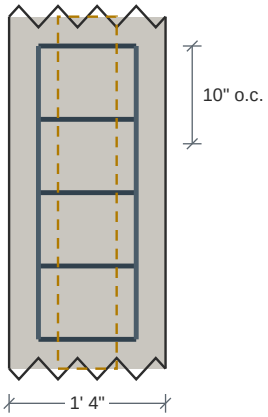

Long.(2) #4 Bars, Transv:#4 @10(in) O.C.

Carrying: Dead 74 plf Snow 600 plf

Design Results	Actual	Allowed	Result	Method	Load Combination
Soil Bearing Pressure (psf)	735	1,500	Passed (49% used)	ASD	D+S
One-Way Shear (lbs)	0	6,655	Passed (0% used)	LRFD	1.2D+1.6S+L
Moment (ft-lbs)	68	7,036	Passed (1% used)	LRFD	1.2D+1.6S+L
Depth Above Bars (in)	6	7	Passed (89% used)	code	ACI 318-14 13.3.1.2

Footing Specification

as entered on the footing, and the mat the check selected

Geometry	
Stem wall type	Concrete
Footing width	1' 4"
Footing depth	10"
Stem wall width	6"
Stem wall height	24"
Stem wall density	145 pcf
Stem wall offset	0

Footing Properties	
Steel yield strength	60,000 psi
Concrete strength	3,000 psi
Soil bearing pressure	1,500 psf
Concrete density	145 pcf
Top reinf. cover	3"
Bottom reinf. cover	3"
Side reinf. cover	3"
Aggregate diameter	3/4"

Soil Properties	
Soil depth above footing	0
Soil density	140 pcf
Soil cohesion	0 psf
Friction angle	30°
Water level	20'

Reinforcement	
Bottom mat	Long.(2) #4 Bars, Transv:#4 @10(in) O.C.
Transverse	#4 @ 10" o.c.
Longitudinal	(2) #4
Selected for	moment and minimum steel
Dowels	(3), bar size not set
Plain concrete (no reinforcing)	No
Override rebar	No
Include water level	No
Allow bearing pressure increase	No

- Soil bearing is checked at service level (ASD) and includes the footing's own weight; shear, moment and crushing at strength level (LRFD), ACI 318-14, loads combined to ASCE 7-16.
- Reinforcement is selected for the moment and for minimum steel (ACI 318-14: 0.0018 Ag for Grade 60), at no more than 3h or 18 in.

Applied Loads	Location	Trib. Width	Dead (0.90)	Snow (1.15)	Comments
1 - Uniform (PLF)	--	N/A	73.6	600	Linked from: Outlookers, Support 2

Footing #53

PASSED

Continuous Footing 1' 4" wide x 10" deep -- Long.(2) #4 Bars, Transv:#4 @10(in) O.C.

Level: Foundation | f'c 3,000 psi | rebar Fy 60 ksi | soil 1,500 psf | Concrete stem wall 6" | ACI 318-14

Controls: Depth Above Bars 89% used

Adequacy 51% (capacity to spare)

WHAT LOADS IT

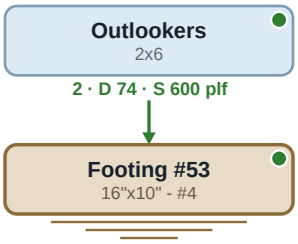

SECTION

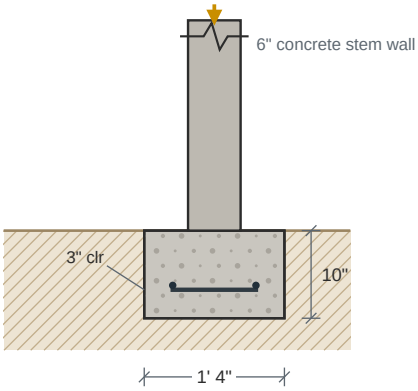

PLAN -- BOTTOM MAT

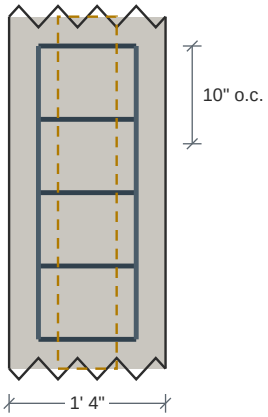

Long.(2) #4 Bars, Transv:#4 @10(in) O.C.

Carrying: Dead 74 plf Snow 600 plf

Design Results	Actual	Allowed	Result	Method	Load Combination
Soil Bearing Pressure (psf)	735	1,500	Passed (49% used)	ASD	D+S
One-Way Shear (lbs)	0	6,655	Passed (0% used)	LRFD	1.2D+1.6S+L
Moment (ft-lbs)	68	7,036	Passed (1% used)	LRFD	1.2D+1.6S+L
Depth Above Bars (in)	6	7	Passed (89% used)	code	ACI 318-14 13.3.1.2

Footing Specification

as entered on the footing, and the mat the check selected

Geometry	
Stem wall type	Concrete
Footing width	1' 4"
Footing depth	10"
Stem wall width	6"
Stem wall height	24"
Stem wall density	145 pcf
Stem wall offset	0

Footing Properties	
Steel yield strength	60,000 psi
Concrete strength	3,000 psi
Soil bearing pressure	1,500 psf
Concrete density	145 pcf
Top reinf. cover	3"
Bottom reinf. cover	3"
Side reinf. cover	3"
Aggregate diameter	3/4"

Soil Properties	
Soil depth above footing	0
Soil density	140 pcf
Soil cohesion	0 psf
Friction angle	30°
Water level	20'

Reinforcement	
Bottom mat	Long.(2) #4 Bars, Transv:#4 @10(in) O.C.
Transverse	#4 @ 10" o.c.
Longitudinal	(2) #4
Selected for	moment and minimum steel
Dowels	(3), bar size not set
Plain concrete (no reinforcing)	No
Override rebar	No
Include water level	No
Allow bearing pressure increase	No

- Soil bearing is checked at service level (ASD) and includes the footing's own weight; shear, moment and crushing at strength level (LRFD), ACI 318-14, loads combined to ASCE 7-16.
- Reinforcement is selected for the moment and for minimum steel (ACI 318-14: 0.0018 Ag for Grade 60), at no more than 3h or 18 in.

Applied Loads	Location	Trib. Width	Dead (0.90)	Snow (1.15)	Comments
1 - Uniform (PLF)	--	N/A	73.6	600	Linked from: Outlookers, Support 2

Footing #54

PASSED

Continuous Footing 1' 4" wide x 10" deep -- Long.(2) #4 Bars, Transv:#4 @10(in) O.C.

Level: Foundation | f'c 3,000 psi | rebar Fy 60 ksi | soil 1,500 psf | Concrete stem wall 6" | ACI 318-14

Controls: Depth Above Bars 89% used

Adequacy 51% (capacity to spare)

WHAT LOADS IT

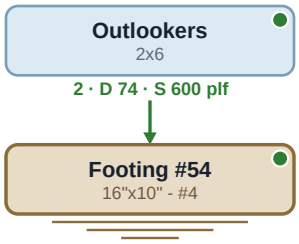

SECTION

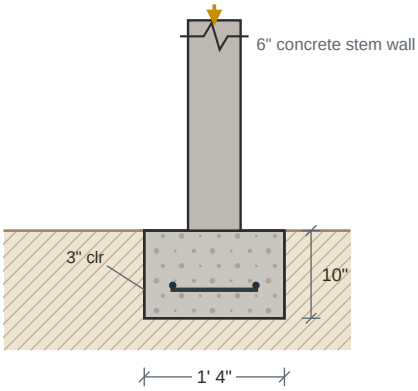

PLAN -- BOTTOM MAT

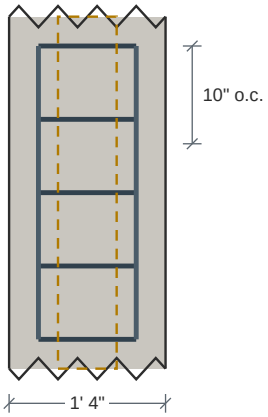

Long.(2) #4 Bars, Transv:#4 @10(in) O.C.

Carrying: Dead 74 plf Snow 600 plf

Design Results	Actual	Allowed	Result	Method	Load Combination
Soil Bearing Pressure (psf)	735	1,500	Passed (49% used)	ASD	D+S
One-Way Shear (lbs)	0	6,655	Passed (0% used)	LRFD	1.2D+1.6S+L
Moment (ft-lbs)	68	7,036	Passed (1% used)	LRFD	1.2D+1.6S+L
Depth Above Bars (in)	6	7	Passed (89% used)	code	ACI 318-14 13.3.1.2

Footing Specification

as entered on the footing, and the mat the check selected

Geometry	
Stem wall type	Concrete
Footing width	1' 4"
Footing depth	10"
Stem wall width	6"
Stem wall height	24"
Stem wall density	145 pcf
Stem wall offset	0

Footing Properties	
Steel yield strength	60,000 psi
Concrete strength	3,000 psi
Soil bearing pressure	1,500 psf
Concrete density	145 pcf
Top reinf. cover	3"
Bottom reinf. cover	3"
Side reinf. cover	3"
Aggregate diameter	3/4"

Soil Properties	
Soil depth above footing	0
Soil density	140 pcf
Soil cohesion	0 psf
Friction angle	30°
Water level	20'

Reinforcement	
Bottom mat	Long.(2) #4 Bars, Transv:#4 @10(in) O.C.
Transverse	#4 @ 10" o.c.
Longitudinal	(2) #4
Selected for	moment and minimum steel
Dowels	(3), bar size not set
Plain concrete (no reinforcing)	No
Override rebar	No
Include water level	No
Allow bearing pressure increase	No

- Soil bearing is checked at service level (ASD) and includes the footing's own weight; shear, moment and crushing at strength level (LRFD), ACI 318-14, loads combined to ASCE 7-16.
- Reinforcement is selected for the moment and for minimum steel (ACI 318-14: 0.0018 Ag for Grade 60), at no more than 3h or 18 in.

Applied Loads	Location	Trib. Width	Dead (0.90)	Snow (1.15)	Comments
1 - Uniform (PLF)	--	N/A	73.6	600	Linked from: Outlookers, Support 2

Footing #55

PASSED

Continuous Footing 1' 4" wide x 10" deep -- Long.(2) #4 Bars, Transv:#4 @10(in) O.C.

Level: Foundation | f'c 3,000 psi | rebar Fy 60 ksi | soil 1,500 psf | Concrete stem wall 6" | ACI 318-14

Controls: Depth Above Bars 89% used

Adequacy 51% (capacity to spare)

WHAT LOADS IT

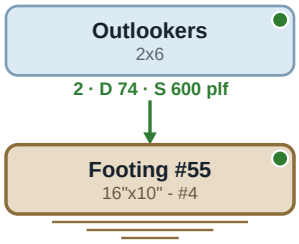

SECTION

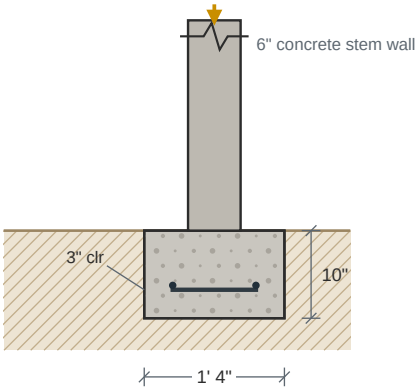

PLAN -- BOTTOM MAT

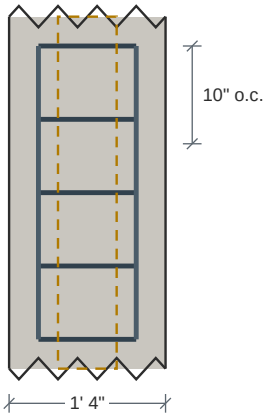

Long.(2) #4 Bars, Transv:#4 @10(in) O.C.

Carrying: Dead 74 plf Snow 600 plf

Design Results	Actual	Allowed	Result	Method	Load Combination
Soil Bearing Pressure (psf)	735	1,500	Passed (49% used)	ASD	D+S
One-Way Shear (lbs)	0	6,655	Passed (0% used)	LRFD	1.2D+1.6S+L
Moment (ft-lbs)	68	7,036	Passed (1% used)	LRFD	1.2D+1.6S+L
Depth Above Bars (in)	6	7	Passed (89% used)	code	ACI 318-14 13.3.1.2

Footing Specification

as entered on the footing, and the mat the check selected

Geometry	
Stem wall type	Concrete
Footing width	1' 4"
Footing depth	10"
Stem wall width	6"
Stem wall height	24"
Stem wall density	145 pcf
Stem wall offset	0

Footing Properties	
Steel yield strength	60,000 psi
Concrete strength	3,000 psi
Soil bearing pressure	1,500 psf
Concrete density	145 pcf
Top reinf. cover	3"
Bottom reinf. cover	3"
Side reinf. cover	3"
Aggregate diameter	3/4"

Soil Properties	
Soil depth above footing	0
Soil density	140 pcf
Soil cohesion	0 psf
Friction angle	30°
Water level	20'

Reinforcement	
Bottom mat	Long.(2) #4 Bars, Transv:#4 @10(in) O.C.
Transverse	#4 @ 10" o.c.
Longitudinal	(2) #4
Selected for	moment and minimum steel
Dowels	(3), bar size not set
Plain concrete (no reinforcing)	No
Override rebar	No
Include water level	No
Allow bearing pressure increase	No

- Soil bearing is checked at service level (ASD) and includes the footing's own weight; shear, moment and crushing at strength level (LRFD), ACI 318-14, loads combined to ASCE 7-16.
- Reinforcement is selected for the moment and for minimum steel (ACI 318-14: 0.0018 Ag for Grade 60), at no more than 3h or 18 in.

Applied Loads	Location	Trib. Width	Dead (0.90)	Snow (1.15)	Comments
1 - Uniform (PLF)	--	N/A	73.6	600	Linked from: Outlookers, Support 2

Footing #56

PASSED

Continuous Footing 1' 4" wide x 10" deep -- Long.(2) #4 Bars, Transv:#4 @10(in) O.C.

Level: Foundation | f'c 3,000 psi | rebar Fy 60 ksi | soil 1,500 psf | Concrete stem wall 6" | ACI 318-14

Controls: Depth Above Bars 89% used

Adequacy 19.5% (capacity to spare)

WHAT LOADS IT

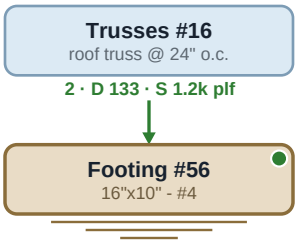

SECTION

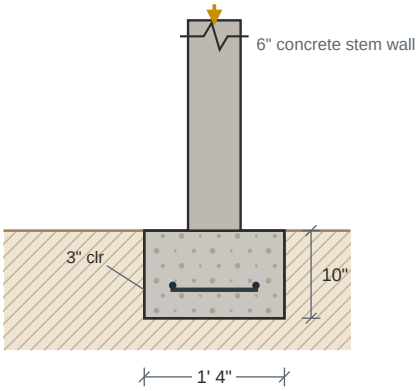

PLAN -- BOTTOM MAT

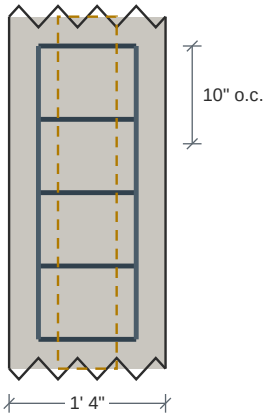

Long.(2) #4 Bars, Transv:#4 @10(in) O.C.

Carrying: Dead 133 plf Snow 1,172 plf

Design Results	Actual	Allowed	Result	Method	Load Combination
Soil Bearing Pressure (psf)	1,208	1,500	Passed (81% used)	ASD	D+S
One-Way Shear (lbs)	0	6,655	Passed (0% used)	LRFD	1.2D+1.6S+L
Moment (ft-lbs)	132	7,036	Passed (2% used)	LRFD	1.2D+1.6S+L
Depth Above Bars (in)	6	7	Passed (89% used)	code	ACI 318-14 13.3.1.2

Footing Specification

as entered on the footing, and the mat the check selected

Geometry	
Stem wall type	Concrete
Footing width	1' 4"
Footing depth	10"
Stem wall width	6"
Stem wall height	24"
Stem wall density	145 pcf
Stem wall offset	0

Footing Properties	
Steel yield strength	60,000 psi
Concrete strength	3,000 psi
Soil bearing pressure	1,500 psf
Concrete density	145 pcf
Top reinf. cover	3"
Bottom reinf. cover	3"
Side reinf. cover	3"
Aggregate diameter	3/4"

Soil Properties	
Soil depth above footing	0
Soil density	140 pcf
Soil cohesion	0 psf
Friction angle	30°
Water level	20'

Reinforcement	
Bottom mat	Long.(2) #4 Bars, Transv:#4 @10(in) O.C.
Transverse	#4 @ 10" o.c.
Longitudinal	(2) #4
Selected for	moment and minimum steel
Dowels	(3), bar size not set
Plain concrete (no reinforcing)	No
Override rebar	No
Include water level	No
Allow bearing pressure increase	No

- Soil bearing is checked at service level (ASD) and includes the footing's own weight; shear, moment and crushing at strength level (LRFD), ACI 318-14, loads combined to ASCE 7-16.
- Reinforcement is selected for the moment and for minimum steel (ACI 318-14: 0.0018 Ag for Grade 60), at no more than 3h or 18 in.

Applied Loads	Location	Trib. Width	Dead (0.90)	Snow (1.15)	Comments
1 - Uniform (PLF)	--	N/A	132.8	1,172	Linked from: Trusses #16, Support 2

Footing #57

PASSED

Continuous Footing 1' 4" wide x 10" deep -- Long.(2) #4 Bars, Transv:#4 @10(in) O.C.

Level: Foundation | f'c 3,000 psi | rebar Fy 60 ksi | soil 1,500 psf | Wood stem wall 5 1/2" | ACI 318-14

Controls: Depth Above Bars 89% used

Adequacy 55.8% (capacity to spare)

WHAT LOADS IT

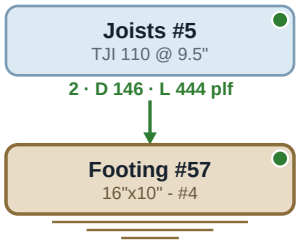

SECTION

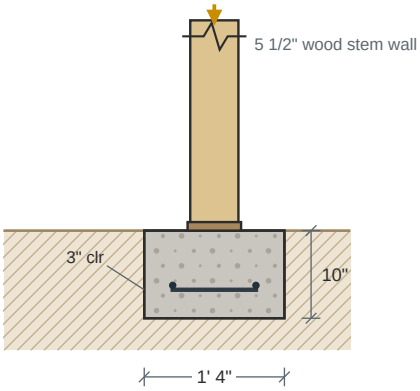

PLAN -- BOTTOM MAT

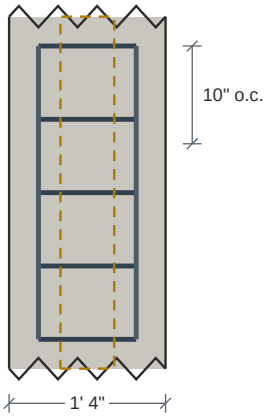

Long.(2) #4 Bars, Transv:#4 @10(in) O.C.

Carrying: Dead 146 plf Floor Live 444 plf

Design Results	Actual	Allowed	Result	Method	Load Combination
Soil Bearing Pressure (psf)	663	1,500	Passed (44% used)	ASD	D+L
One-Way Shear (lbs)	0	6,655	Passed (0% used)	LRFD	1.2D+1.6L+0.5Lr
Moment (ft-lbs)	101	7,036	Passed (1% used)	LRFD	1.2D+1.6L+0.5Lr
Depth Above Bars (in)	6	7	Passed (89% used)	code	ACI 318-14 13.3.1.2

Footing Specification

as entered on the footing, and the mat the check selected

Geometry	
Stem wall type	Wood
Footing width	1' 4"
Footing depth	10"
Stem wall width	5 1/2"
Stem wall height	24"
Stem wall density	145 pcf
Stem wall offset	0

Footing Properties	
Steel yield strength	60,000 psi
Concrete strength	3,000 psi
Soil bearing pressure	1,500 psf
Concrete density	145 pcf
Top reinf. cover	3"
Bottom reinf. cover	3"
Side reinf. cover	3"
Aggregate diameter	3/4"

Soil Properties	
Soil depth above footing	0
Soil density	140 pcf
Soil cohesion	0 psf
Friction angle	30°
Water level	20'

Reinforcement	
Bottom mat	Long.(2) #4 Bars, Transv:#4 @10(in) O.C.
Transverse	#4 @ 10" o.c.
Longitudinal	(2) #4
Selected for	moment and minimum steel
Dowels	(3), bar size not set
Plain concrete (no reinforcing)	No
Override rebar	No
Include water level	No
Allow bearing pressure increase	No

- Soil bearing is checked at service level (ASD) and includes the footing's own weight; shear, moment and crushing at strength level (LRFD), ACI 318-14, loads combined to ASCE 7-16.
- Reinforcement is selected for the moment and for minimum steel (ACI 318-14: 0.0018 Ag for Grade 60), at no more than 3h or 18 in.

Applied Loads	Location	Trib. Width	Dead (0.90)	Floor Live (1.00)	Comments
1 - Uniform (PLF)	--	N/A	146.1	444.4	Linked from: Joists #5, Support 2

Footing #58

PASSED

Continuous Footing 1' 4" wide x 10" deep -- Long.(2) #4 Bars, Transv:#4 @10(in) O.C.

Level: Foundation | f'c 3,000 psi | rebar Fy 60 ksi | soil 1,500 psf | Wood stem wall 5 1/2" | ACI 318-14

Controls: Depth Above Bars 89% used

Adequacy 61% (capacity to spare)

WHAT LOADS IT

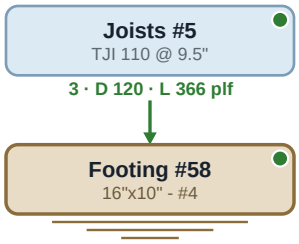

SECTION

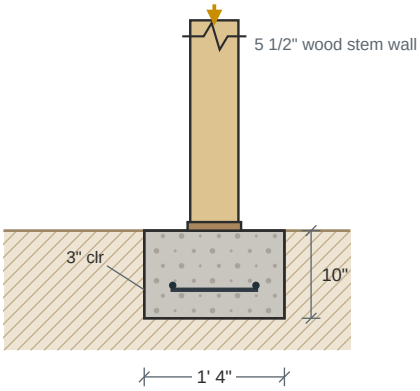

PLAN -- BOTTOM MAT

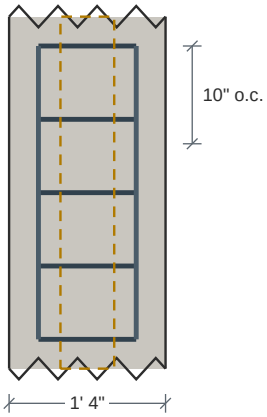

Long.(2) #4 Bars, Transv:#4 @10(in) O.C.

Carrying: Dead 120 plf Floor Live 366 plf

Design Results	Actual	Allowed	Result	Method	Load Combination
Soil Bearing Pressure (psf)	586	1,500	Passed (39% used)	ASD	D+L
One-Way Shear (lbs)	0	6,655	Passed (0% used)	LRFD	1.2D+1.6L+0.5Lr
Moment (ft-lbs)	84	7,036	Passed (1% used)	LRFD	1.2D+1.6L+0.5Lr
Depth Above Bars (in)	6	7	Passed (89% used)	code	ACI 318-14 13.3.1.2

Footing Specification

as entered on the footing, and the mat the check selected

Geometry	
Stem wall type	Wood
Footing width	1' 4"
Footing depth	10"
Stem wall width	5 1/2"
Stem wall height	24"
Stem wall density	145 pcf
Stem wall offset	0

Footing Properties	
Steel yield strength	60,000 psi
Concrete strength	3,000 psi
Soil bearing pressure	1,500 psf
Concrete density	145 pcf
Top reinf. cover	3"
Bottom reinf. cover	3"
Side reinf. cover	3"
Aggregate diameter	3/4"

Soil Properties	
Soil depth above footing	0
Soil density	140 pcf
Soil cohesion	0 psf
Friction angle	30°
Water level	20'

Reinforcement	
Bottom mat	Long.(2) #4 Bars, Transv:#4 @10(in) O.C.
Transverse	#4 @ 10" o.c.
Longitudinal	(2) #4
Selected for	moment and minimum steel
Dowels	(3), bar size not set
Plain concrete (no reinforcing)	No
Override rebar	No
Include water level	No
Allow bearing pressure increase	No

- Soil bearing is checked at service level (ASD) and includes the footing's own weight; shear, moment and crushing at strength level (LRFD), ACI 318-14, loads combined to ASCE 7-16.
- Reinforcement is selected for the moment and for minimum steel (ACI 318-14: 0.0018 Ag for Grade 60), at no more than 3h or 18 in.

Applied Loads	Location	Trib. Width	Dead (0.90)	Floor Live (1.00)	Comments
1 - Uniform (PLF)	--	N/A	120.5	366.4	Linked from: Joists #5, Support 3

Footing #59

PASSED

Continuous Footing 1' 4" wide x 10" deep -- Long.(2) #4 Bars, Transv:#4 @10(in) O.C.

Level: Foundation | f'c 3,000 psi | rebar Fy 60 ksi | soil 1,500 psf | Wood stem wall 5 1/2" | ACI 318-14

Controls: Depth Above Bars 89% used

Adequacy 61% (capacity to spare)

WHAT LOADS IT

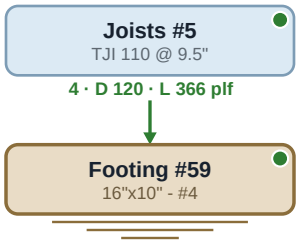

SECTION

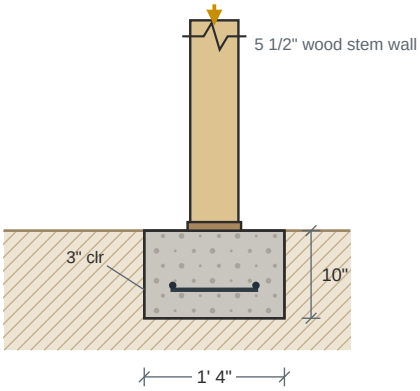

PLAN -- BOTTOM MAT

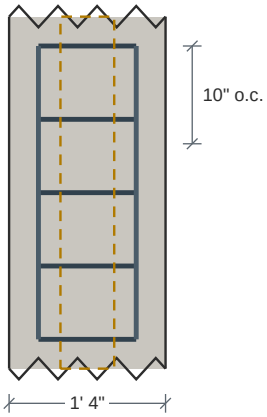

Long.(2) #4 Bars, Transv:#4 @10(in) O.C.

Carrying: Dead 120 plf Floor Live 366 plf

Design Results	Actual	Allowed	Result	Method	Load Combination
Soil Bearing Pressure (psf)	586	1,500	Passed (39% used)	ASD	D+L
One-Way Shear (lbs)	0	6,655	Passed (0% used)	LRFD	1.2D+1.6L+0.5Lr
Moment (ft-lbs)	84	7,036	Passed (1% used)	LRFD	1.2D+1.6L+0.5Lr
Depth Above Bars (in)	6	7	Passed (89% used)	code	ACI 318-14 13.3.1.2

Footing Specification

as entered on the footing, and the mat the check selected

Geometry	
Stem wall type	Wood
Footing width	1' 4"
Footing depth	10"
Stem wall width	5 1/2"
Stem wall height	24"
Stem wall density	145 pcf
Stem wall offset	0

Footing Properties	
Steel yield strength	60,000 psi
Concrete strength	3,000 psi
Soil bearing pressure	1,500 psf
Concrete density	145 pcf
Top reinf. cover	3"
Bottom reinf. cover	3"
Side reinf. cover	3"
Aggregate diameter	3/4"

Soil Properties	
Soil depth above footing	0
Soil density	140 pcf
Soil cohesion	0 psf
Friction angle	30°
Water level	20'

Reinforcement	
Bottom mat	Long.(2) #4 Bars, Transv:#4 @10(in) O.C.
Transverse	#4 @ 10" o.c.
Longitudinal	(2) #4
Selected for	moment and minimum steel
Dowels	(3), bar size not set
Plain concrete (no reinforcing)	No
Override rebar	No
Include water level	No
Allow bearing pressure increase	No

- Soil bearing is checked at service level (ASD) and includes the footing's own weight; shear, moment and crushing at strength level (LRFD), ACI 318-14, loads combined to ASCE 7-16.
- Reinforcement is selected for the moment and for minimum steel (ACI 318-14: 0.0018 Ag for Grade 60), at no more than 3h or 18 in.

Applied Loads	Location	Trib. Width	Dead (0.90)	Floor Live (1.00)	Comments
1 - Uniform (PLF)	--	N/A	120.5	366.4	Linked from: Joists #5, Support 4

Footing #60

PASSED

Continuous Footing 1' 4" wide x 10" deep -- Long.(2) #4 Bars, Transv:#4 @10(in) O.C.

Level: Foundation | f'c 3,000 psi | rebar Fy 60 ksi | soil 1,500 psf | Wood stem wall 5 1/2" | ACI 318-14

Controls: Depth Above Bars 89% used

Adequacy 55.8% (capacity to spare)

WHAT LOADS IT

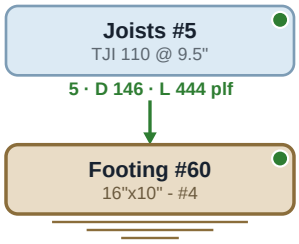

SECTION

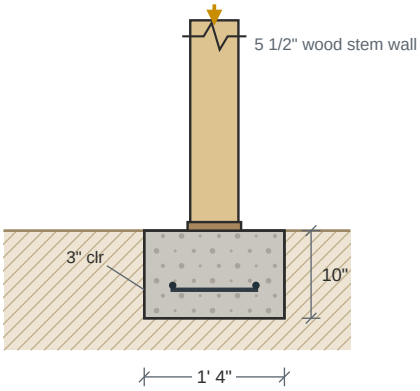

PLAN -- BOTTOM MAT

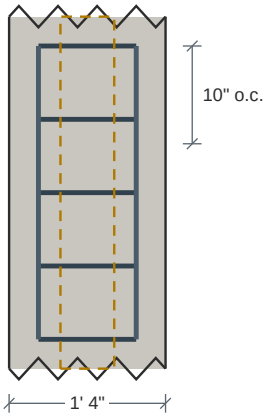

Long.(2) #4 Bars, Transv:#4 @10(in) O.C.

Carrying: Dead 146 plf Floor Live 444 plf

Design Results	Actual	Allowed	Result	Method	Load Combination
Soil Bearing Pressure (psf)	663	1,500	Passed (44% used)	ASD	D+L
One-Way Shear (lbs)	0	6,655	Passed (0% used)	LRFD	1.2D+1.6L+0.5Lr
Moment (ft-lbs)	101	7,036	Passed (1% used)	LRFD	1.2D+1.6L+0.5Lr
Depth Above Bars (in)	6	7	Passed (89% used)	code	ACI 318-14 13.3.1.2

Footing Specification

as entered on the footing, and the mat the check selected

Geometry	
Stem wall type	Wood
Footing width	1' 4"
Footing depth	10"
Stem wall width	5 1/2"
Stem wall height	24"
Stem wall density	145 pcf
Stem wall offset	0

Footing Properties	
Steel yield strength	60,000 psi
Concrete strength	3,000 psi
Soil bearing pressure	1,500 psf
Concrete density	145 pcf
Top reinf. cover	3"
Bottom reinf. cover	3"
Side reinf. cover	3"
Aggregate diameter	3/4"

Soil Properties	
Soil depth above footing	0
Soil density	140 pcf
Soil cohesion	0 psf
Friction angle	30°
Water level	20'

Reinforcement	
Bottom mat	Long.(2) #4 Bars, Transv:#4 @10(in) O.C.
Transverse	#4 @ 10" o.c.
Longitudinal	(2) #4
Selected for	moment and minimum steel
Dowels	(3), bar size not set
Plain concrete (no reinforcing)	No
Override rebar	No
Include water level	No
Allow bearing pressure increase	No

- Soil bearing is checked at service level (ASD) and includes the footing's own weight; shear, moment and crushing at strength level (LRFD), ACI 318-14, loads combined to ASCE 7-16.
- Reinforcement is selected for the moment and for minimum steel (ACI 318-14: 0.0018 Ag for Grade 60), at no more than 3h or 18 in.

Applied Loads	Location	Trib. Width	Dead (0.90)	Floor Live (1.00)	Comments
1 - Uniform (PLF)	--	N/A	146.1	444.4	Linked from: Joists #5, Support 5

Footing #61

PASSED

Continuous Footing 1' 4" wide x 10" deep -- Long.(2) #4 Bars, Transv:#4 @10(in) O.C.

Level: Foundation | f'c 3,000 psi | rebar Fy 60 ksi | soil 1,500 psf | Wood stem wall 3 1/2" | ACI 318-14

Controls: Depth Above Bars 89% used

Adequacy 65% (capacity to spare)

WHAT LOADS IT

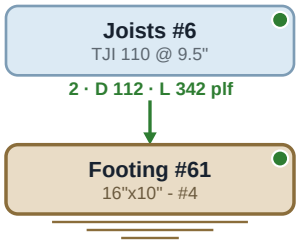

SECTION

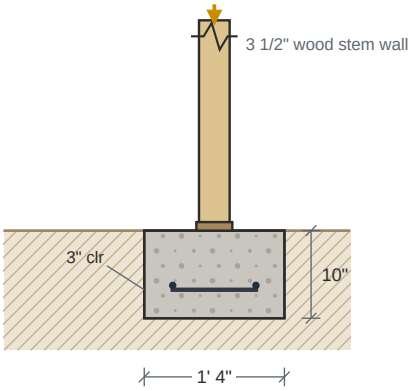

PLAN -- BOTTOM MAT

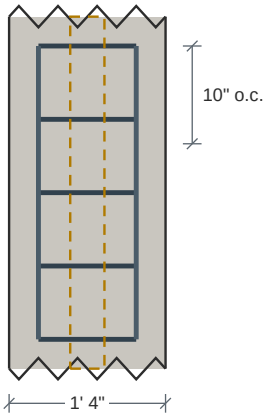

Long.(2) #4 Bars, Transv:#4 @10(in) O.C.

Carrying: Dead 112 plf Floor Live 342 plf

Design Results	Actual	Allowed	Result	Method	Load Combination
Soil Bearing Pressure (psf)	525	1,500	Passed (35% used)	ASD	D+L
One-Way Shear (lbs)	0	6,655	Passed (0% used)	LRFD	1.2D+1.6L+0.5Lr
Moment (ft-lbs)	90	7,036	Passed (1% used)	LRFD	1.2D+1.6L+0.5Lr
Depth Above Bars (in)	6	7	Passed (89% used)	code	ACI 318-14 13.3.1.2

Footing Specification

as entered on the footing, and the mat the check selected

Geometry	
Stem wall type	Wood
Footing width	1' 4"
Footing depth	10"
Stem wall width	3 1/2"
Stem wall height	24"
Stem wall density	145 pcf
Stem wall offset	0

Footing Properties	
Steel yield strength	60,000 psi
Concrete strength	3,000 psi
Soil bearing pressure	1,500 psf
Concrete density	145 pcf
Top reinf. cover	3"
Bottom reinf. cover	3"
Side reinf. cover	3"
Aggregate diameter	3/4"

Soil Properties	
Soil depth above footing	0
Soil density	140 pcf
Soil cohesion	0 psf
Friction angle	30°
Water level	20'

Reinforcement	
Bottom mat	Long.(2) #4 Bars, Transv:#4 @10(in) O.C.
Transverse	#4 @ 10" o.c.
Longitudinal	(2) #4
Selected for	moment and minimum steel
Dowels	(3), bar size not set
Plain concrete (no reinforcing)	No
Override rebar	No
Include water level	No
Allow bearing pressure increase	No

- Soil bearing is checked at service level (ASD) and includes the footing's own weight; shear, moment and crushing at strength level (LRFD), ACI 318-14, loads combined to ASCE 7-16.
- Reinforcement is selected for the moment and for minimum steel (ACI 318-14: 0.0018 Ag for Grade 60), at no more than 3h or 18 in.

Applied Loads	Location	Trib. Width	Dead (0.90)	Floor Live (1.00)	Comments
1 - Uniform (PLF)	--	N/A	112.4	341.9	Linked from: Joists #6, Support 2

Footing #62

PASSED

Continuous Footing 1' 4" wide x 10" deep -- Long.(2) #4 Bars, Transv:#4 @10(in) O.C.

Level: Foundation | f'c 3,000 psi | rebar Fy 60 ksi | soil 1,500 psf | Wood stem wall 3 1/2" | ACI 318-14

Controls: Depth Above Bars 89% used

Adequacy 65% (capacity to spare)

WHAT LOADS IT

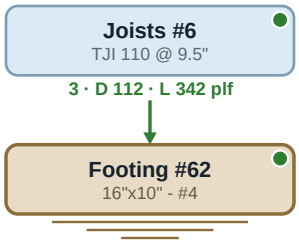

SECTION

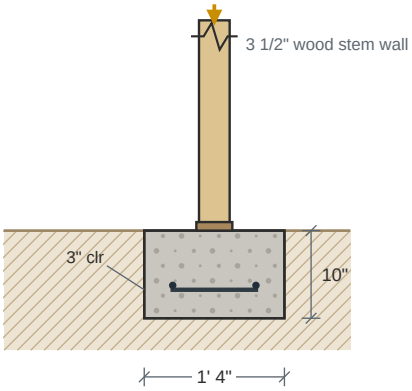

PLAN -- BOTTOM MAT

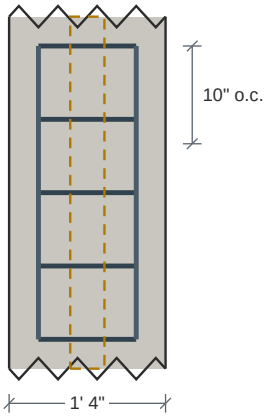

Long.(2) #4 Bars, Transv:#4 @10(in) O.C.

Carrying: Dead 112 plf Floor Live 342 plf

Design Results	Actual	Allowed	Result	Method	Load Combination
Soil Bearing Pressure (psf)	525	1,500	Passed (35% used)	ASD	D+L
One-Way Shear (lbs)	0	6,655	Passed (0% used)	LRFD	1.2D+1.6L+0.5Lr
Moment (ft-lbs)	90	7,036	Passed (1% used)	LRFD	1.2D+1.6L+0.5Lr
Depth Above Bars (in)	6	7	Passed (89% used)	code	ACI 318-14 13.3.1.2

Footing Specification

as entered on the footing, and the mat the check selected

Geometry	
Stem wall type	Wood
Footing width	1' 4"
Footing depth	10"
Stem wall width	3 1/2"
Stem wall height	24"
Stem wall density	145 pcf
Stem wall offset	0

Footing Properties	
Steel yield strength	60,000 psi
Concrete strength	3,000 psi
Soil bearing pressure	1,500 psf
Concrete density	145 pcf
Top reinf. cover	3"
Bottom reinf. cover	3"
Side reinf. cover	3"
Aggregate diameter	3/4"

Soil Properties	
Soil depth above footing	0
Soil density	140 pcf
Soil cohesion	0 psf
Friction angle	30°
Water level	20'

Reinforcement	
Bottom mat	Long.(2) #4 Bars, Transv:#4 @10(in) O.C.
Transverse	#4 @ 10" o.c.
Longitudinal	(2) #4
Selected for	moment and minimum steel
Dowels	(3), bar size not set
Plain concrete (no reinforcing)	No
Override rebar	No
Include water level	No
Allow bearing pressure increase	No

- Soil bearing is checked at service level (ASD) and includes the footing's own weight; shear, moment and crushing at strength level (LRFD), ACI 318-14, loads combined to ASCE 7-16.
- Reinforcement is selected for the moment and for minimum steel (ACI 318-14: 0.0018 Ag for Grade 60), at no more than 3h or 18 in.

Applied Loads	Location	Trib. Width	Dead (0.90)	Floor Live (1.00)	Comments
1 - Uniform (PLF)	--	N/A	112.4	341.9	Linked from: Joists #6, Support 3

Footing #63

PASSED

Continuous Footing 1' 4" wide x 10" deep -- Long.(2) #4 Bars, Transv:#4 @10(in) O.C.

Level: Foundation | f'c 3,000 psi | rebar Fy 60 ksi | soil 1,500 psf | Wood stem wall 3 1/2" | ACI 318-14

Controls: Depth Above Bars 89% used

Adequacy 69.1% (capacity to spare)

WHAT LOADS IT

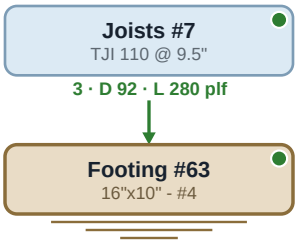

SECTION

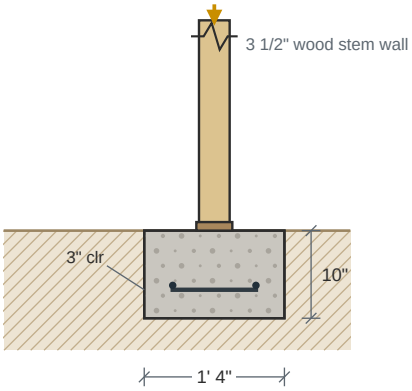

PLAN -- BOTTOM MAT

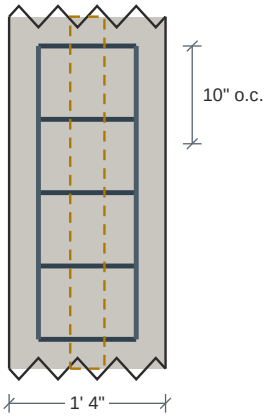

Long.(2) #4 Bars, Transv:#4 @10(in) O.C.

Carrying: Dead 92 plf Floor Live 280 plf

Design Results	Actual	Allowed	Result	Method	Load Combination
Soil Bearing Pressure (psf)	463	1,500	Passed (31% used)	ASD	D+L
One-Way Shear (lbs)	0	6,655	Passed (0% used)	LRFD	1.2D+1.6L+0.5Lr
Moment (ft-lbs)	74	7,036	Passed (1% used)	LRFD	1.2D+1.6L+0.5Lr
Depth Above Bars (in)	6	7	Passed (89% used)	code	ACI 318-14 13.3.1.2

Footing Specification

as entered on the footing, and the mat the check selected

Geometry	
Stem wall type	Wood
Footing width	1' 4"
Footing depth	10"
Stem wall width	3 1/2"
Stem wall height	24"
Stem wall density	145 pcf
Stem wall offset	0

Footing Properties	
Steel yield strength	60,000 psi
Concrete strength	3,000 psi
Soil bearing pressure	1,500 psf
Concrete density	145 pcf
Top reinf. cover	3"
Bottom reinf. cover	3"
Side reinf. cover	3"
Aggregate diameter	3/4"

Soil Properties	
Soil depth above footing	0
Soil density	140 pcf
Soil cohesion	0 psf
Friction angle	30°
Water level	20'

Reinforcement	
Bottom mat	Long.(2) #4 Bars, Transv:#4 @10(in) O.C.
Transverse	#4 @ 10" o.c.
Longitudinal	(2) #4
Selected for	moment and minimum steel
Dowels	(3), bar size not set
Plain concrete (no reinforcing)	No
Override rebar	No
Include water level	No
Allow bearing pressure increase	No

- Soil bearing is checked at service level (ASD) and includes the footing's own weight; shear, moment and crushing at strength level (LRFD), ACI 318-14, loads combined to ASCE 7-16.
- Reinforcement is selected for the moment and for minimum steel (ACI 318-14: 0.0018 Ag for Grade 60), at no more than 3h or 18 in.

Applied Loads	Location	Trib. Width	Dead (0.90)	Floor Live (1.00)	Comments
1 - Uniform (PLF)	--	N/A	92.1	280.1	Linked from: Joists #7, Support 3

Footing #64

PASSED

Continuous Footing 1' 4" wide x 10" deep -- Long.(2) #4 Bars, Transv:#4 @10(in) O.C.

Level: Foundation | f'c 3,000 psi | rebar Fy 60 ksi | soil 1,500 psf | Wood stem wall 3 1/2" | ACI 318-14

Controls: Depth Above Bars 89% used

Adequacy 62.3% (capacity to spare)

WHAT LOADS IT

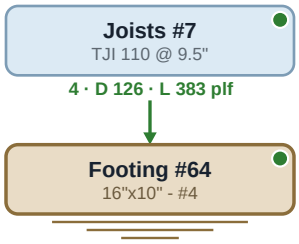

SECTION

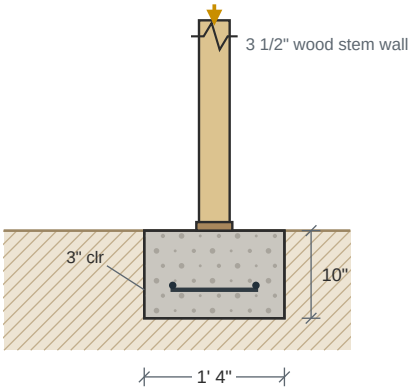

PLAN -- BOTTOM MAT

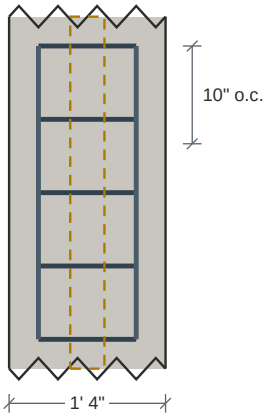

Long.(2) #4 Bars, Transv:#4 @10(in) O.C.

Carrying: Dead 126 plf Floor Live 383 plf

Design Results	Actual	Allowed	Result	Method	Load Combination
Soil Bearing Pressure (psf)	566	1,500	Passed (38% used)	ASD	D+L
One-Way Shear (lbs)	0	6,655	Passed (0% used)	LRFD	1.2D+1.6L+0.5Lr
Moment (ft-lbs)	101	7,036	Passed (1% used)	LRFD	1.2D+1.6L+0.5Lr
Depth Above Bars (in)	6	7	Passed (89% used)	code	ACI 318-14 13.3.1.2

Footing Specification

as entered on the footing, and the mat the check selected

Geometry	
Stem wall type	Wood
Footing width	1' 4"
Footing depth	10"
Stem wall width	3 1/2"
Stem wall height	24"
Stem wall density	145 pcf
Stem wall offset	0

Footing Properties	
Steel yield strength	60,000 psi
Concrete strength	3,000 psi
Soil bearing pressure	1,500 psf
Concrete density	145 pcf
Top reinf. cover	3"
Bottom reinf. cover	3"
Side reinf. cover	3"
Aggregate diameter	3/4"

Soil Properties	
Soil depth above footing	0
Soil density	140 pcf
Soil cohesion	0 psf
Friction angle	30°
Water level	20'

Reinforcement	
Bottom mat	Long.(2) #4 Bars, Transv:#4 @10(in) O.C.
Transverse	#4 @ 10" o.c.
Longitudinal	(2) #4
Selected for	moment and minimum steel
Dowels	(3), bar size not set
Plain concrete (no reinforcing)	No
Override rebar	No
Include water level	No
Allow bearing pressure increase	No

- Soil bearing is checked at service level (ASD) and includes the footing's own weight; shear, moment and crushing at strength level (LRFD), ACI 318-14, loads combined to ASCE 7-16.
- Reinforcement is selected for the moment and for minimum steel (ACI 318-14: 0.0018 Ag for Grade 60), at no more than 3h or 18 in.

Applied Loads	Location	Trib. Width	Dead (0.90)	Floor Live (1.00)	Comments
1 - Uniform (PLF)	--	N/A	125.9	383.1	Linked from: Joists #7, Support 4

Footing #65

PASSED

Continuous Footing 1' 4" wide x 10" deep -- Long.(2) #4 Bars, Transv:#4 @10(in) O.C.

Level: Foundation | f'c 3,000 psi | rebar Fy 60 ksi | soil 1,500 psf | Wood stem wall 3 1/2" | ACI 318-14

Controls: Depth Above Bars 89% used

Adequacy 61.9% (capacity to spare)

WHAT LOADS IT

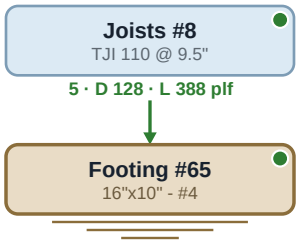

SECTION

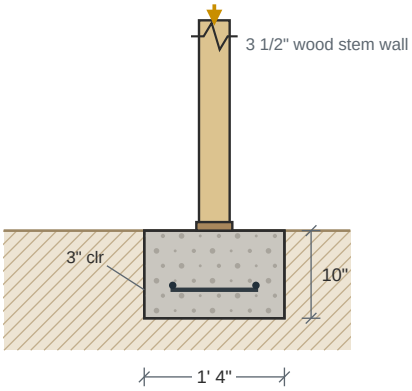

PLAN -- BOTTOM MAT

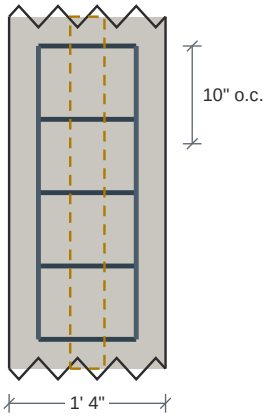

Long.(2) #4 Bars, Transv:#4 @10(in) O.C.

Carrying: Dead 128 plf Floor Live 388 plf

Design Results	Actual	Allowed	Result	Method	Load Combination
Soil Bearing Pressure (psf)	571	1,500	Passed (38% used)	ASD	D+L
One-Way Shear (lbs)	0	6,655	Passed (0% used)	LRFD	1.2D+1.6L+0.5Lr
Moment (ft-lbs)	102	7,036	Passed (1% used)	LRFD	1.2D+1.6L+0.5Lr
Depth Above Bars (in)	6	7	Passed (89% used)	code	ACI 318-14 13.3.1.2

Footing Specification

as entered on the footing, and the mat the check selected

Geometry	
Stem wall type	Wood
Footing width	1' 4"
Footing depth	10"
Stem wall width	3 1/2"
Stem wall height	24"
Stem wall density	145 pcf
Stem wall offset	0

Footing Properties	
Steel yield strength	60,000 psi
Concrete strength	3,000 psi
Soil bearing pressure	1,500 psf
Concrete density	145 pcf
Top reinf. cover	3"
Bottom reinf. cover	3"
Side reinf. cover	3"
Aggregate diameter	3/4"

Soil Properties	
Soil depth above footing	0
Soil density	140 pcf
Soil cohesion	0 psf
Friction angle	30°
Water level	20'

Reinforcement	
Bottom mat	Long.(2) #4 Bars, Transv:#4 @10(in) O.C.
Transverse	#4 @ 10" o.c.
Longitudinal	(2) #4
Selected for	moment and minimum steel
Dowels	(3), bar size not set
Plain concrete (no reinforcing)	No
Override rebar	No
Include water level	No
Allow bearing pressure increase	No

- Soil bearing is checked at service level (ASD) and includes the footing's own weight; shear, moment and crushing at strength level (LRFD), ACI 318-14, loads combined to ASCE 7-16.
- Reinforcement is selected for the moment and for minimum steel (ACI 318-14: 0.0018 Ag for Grade 60), at no more than 3h or 18 in.

Applied Loads	Location	Trib. Width	Dead (0.90)	Floor Live (1.00)	Comments
1 - Uniform (PLF)	--	N/A	127.6	388.1	Linked from: Joists #8, Support 5

Footing #66

PASSED

Continuous Footing 1' 4" wide x 10" deep -- Long.(2) #4 Bars, Transv:#4 @10(in) O.C.

Level: Foundation | f'c 3,000 psi | rebar Fy 60 ksi | soil 1,500 psf | Concrete stem wall 6" | ACI 318-14

Controls: Depth Above Bars 89% used

Adequacy 76% (capacity to spare)

WHAT LOADS IT

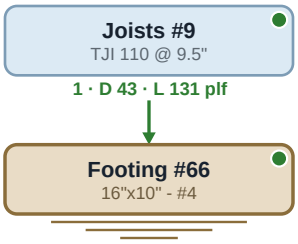

SECTION

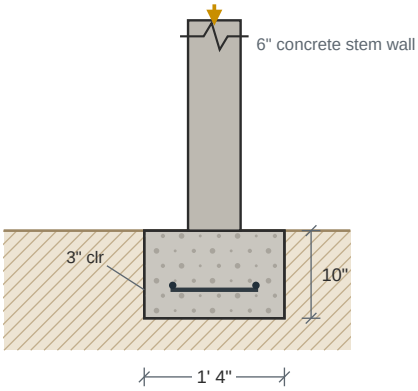

PLAN -- BOTTOM MAT

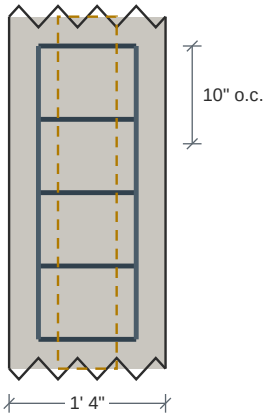

Long.(2) #4 Bars, Transv:#4 @10(in) O.C.

Carrying: Dead 43 plf Floor Live 131 plf

Design Results	Actual	Allowed	Result	Method	Load Combination
Soil Bearing Pressure (psf)	360	1,500	Passed (24% used)	ASD	D+L
One-Way Shear (lbs)	0	6,655	Passed (0% used)	LRFD	1.2D+1.6L+0.5Lr
Moment (ft-lbs)	17	7,036	Passed (0% used)	LRFD	1.2D+1.6L+0.5Lr
Depth Above Bars (in)	6	7	Passed (89% used)	code	ACI 318-14 13.3.1.2

Footing Specification

as entered on the footing, and the mat the check selected

Geometry	
Stem wall type	Concrete
Footing width	1' 4"
Footing depth	10"
Stem wall width	6"
Stem wall height	24"
Stem wall density	145 pcf
Stem wall offset	0

Footing Properties	
Steel yield strength	60,000 psi
Concrete strength	3,000 psi
Soil bearing pressure	1,500 psf
Concrete density	145 pcf
Top reinf. cover	3"
Bottom reinf. cover	3"
Side reinf. cover	3"
Aggregate diameter	3/4"

Soil Properties	
Soil depth above footing	0
Soil density	140 pcf
Soil cohesion	0 psf
Friction angle	30°
Water level	20'

Reinforcement	
Bottom mat	Long.(2) #4 Bars, Transv:#4 @10(in) O.C.
Transverse	#4 @ 10" o.c.
Longitudinal	(2) #4
Selected for	moment and minimum steel
Dowels	(3), bar size not set
Plain concrete (no reinforcing)	No
Override rebar	No
Include water level	No
Allow bearing pressure increase	No

- Soil bearing is checked at service level (ASD) and includes the footing's own weight; shear, moment and crushing at strength level (LRFD), ACI 318-14, loads combined to ASCE 7-16.
- Reinforcement is selected for the moment and for minimum steel (ACI 318-14: 0.0018 Ag for Grade 60), at no more than 3h or 18 in.

Applied Loads	Location	Trib. Width	Dead (0.90)	Floor Live (1.00)	Comments
1 - Uniform (PLF)	--	N/A	43	130.8	Linked from: Joists #9, Support 1

Footing #67

PASSED

Continuous Footing 1' 4" wide x 10" deep -- Long.(2) #4 Bars, Transv:#4 @10(in) O.C.

Level: Foundation | f'c 3,000 psi | rebar Fy 60 ksi | soil 1,500 psf | Wood stem wall 5 1/2" | ACI 318-14

Controls: Depth Above Bars 89% used

Adequacy 60.6% (capacity to spare)

WHAT LOADS IT

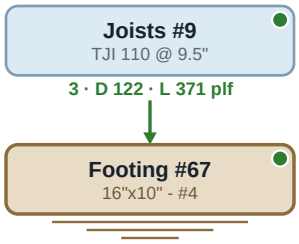

SECTION

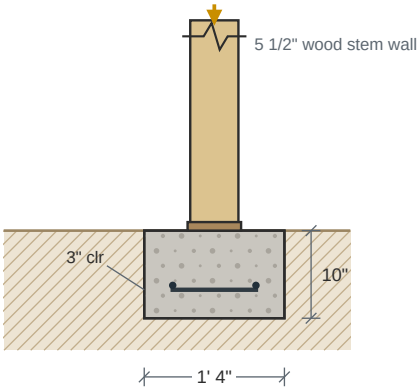

PLAN -- BOTTOM MAT

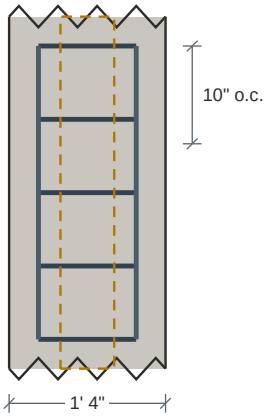

Long.(2) #4 Bars, Transv:#4 @10(in) O.C.

Carrying: Dead 122 plf Floor Live 371 plf

Design Results	Actual	Allowed	Result	Method	Load Combination
Soil Bearing Pressure (psf)	591	1,500	Passed (39% used)	ASD	D+L
One-Way Shear (lbs)	0	6,655	Passed (0% used)	LRFD	1.2D+1.6L+0.5Lr
Moment (ft-lbs)	85	7,036	Passed (1% used)	LRFD	1.2D+1.6L+0.5Lr
Depth Above Bars (in)	6	7	Passed (89% used)	code	ACI 318-14 13.3.1.2

Footing Specification

as entered on the footing, and the mat the check selected

Geometry	
Stem wall type	Wood
Footing width	1' 4"
Footing depth	10"
Stem wall width	5 1/2"
Stem wall height	24"
Stem wall density	145 pcf
Stem wall offset	0

Footing Properties	
Steel yield strength	60,000 psi
Concrete strength	3,000 psi
Soil bearing pressure	1,500 psf
Concrete density	145 pcf
Top reinf. cover	3"
Bottom reinf. cover	3"
Side reinf. cover	3"
Aggregate diameter	3/4"

Soil Properties	
Soil depth above footing	0
Soil density	140 pcf
Soil cohesion	0 psf
Friction angle	30°
Water level	20'

Reinforcement	
Bottom mat	Long.(2) #4 Bars, Transv:#4 @10(in) O.C.
Transverse	#4 @ 10" o.c.
Longitudinal	(2) #4
Selected for	moment and minimum steel
Dowels	(3), bar size not set
Plain concrete (no reinforcing)	No
Override rebar	No
Include water level	No
Allow bearing pressure increase	No

- Soil bearing is checked at service level (ASD) and includes the footing's own weight; shear, moment and crushing at strength level (LRFD), ACI 318-14, loads combined to ASCE 7-16.
- Reinforcement is selected for the moment and for minimum steel (ACI 318-14: 0.0018 Ag for Grade 60), at no more than 3h or 18 in.

Applied Loads	Location	Trib. Width	Dead (0.90)	Floor Live (1.00)	Comments
1 - Uniform (PLF)	--	N/A	122.1	371.4	Linked from: Joists #9, Support 3

Footing #68

PASSED

Continuous Footing 1' 4" wide x 10" deep -- Long.(2) #4 Bars, Transv:#4 @10(in) O.C.

Level: Foundation | f'c 3,000 psi | rebar Fy 60 ksi | soil 1,500 psf | Concrete stem wall 6" | ACI 318-14

Controls: Depth Above Bars 89% used

Adequacy 81.2% (capacity to spare)

WHAT LOADS IT

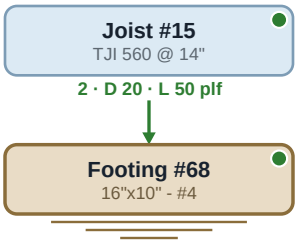

SECTION

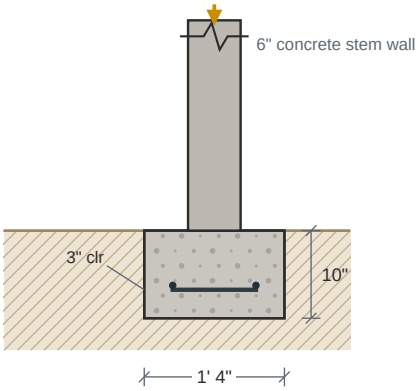

PLAN -- BOTTOM MAT

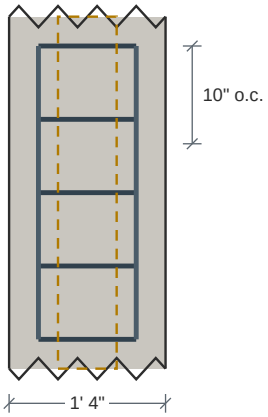

Long.(2) #4 Bars, Transv:#4 @10(in) O.C.

Carrying: Dead 20 plf Floor Live 50 plf

Design Results	Actual	Allowed	Result	Method	Load Combination
Soil Bearing Pressure (psf)	282	1,500	Passed (19% used)	ASD	D+L
One-Way Shear (lbs)	0	6,655	Passed (0% used)	LRFD	1.2D+1.6L+0.5Lr
Moment (ft-lbs)	7	7,036	Passed (0% used)	LRFD	1.2D+1.6L+0.5Lr
Depth Above Bars (in)	6	7	Passed (89% used)	code	ACI 318-14 13.3.1.2

Footing Specification

as entered on the footing, and the mat the check selected

Geometry	
Stem wall type	Concrete
Footing width	1' 4"
Footing depth	10"
Stem wall width	6"
Stem wall height	24"
Stem wall density	145 pcf
Stem wall offset	0

Footing Properties	
Steel yield strength	60,000 psi
Concrete strength	3,000 psi
Soil bearing pressure	1,500 psf
Concrete density	145 pcf
Top reinf. cover	3"
Bottom reinf. cover	3"
Side reinf. cover	3"
Aggregate diameter	3/4"

Soil Properties	
Soil depth above footing	0
Soil density	140 pcf
Soil cohesion	0 psf
Friction angle	30°
Water level	20'

Reinforcement	
Bottom mat	Long.(2) #4 Bars, Transv:#4 @10(in) O.C.
Transverse	#4 @ 10" o.c.
Longitudinal	(2) #4
Selected for	moment and minimum steel
Dowels	(3), bar size not set
Plain concrete (no reinforcing)	No
Override rebar	No
Include water level	No
Allow bearing pressure increase	No

- Soil bearing is checked at service level (ASD) and includes the footing's own weight; shear, moment and crushing at strength level (LRFD), ACI 318-14, loads combined to ASCE 7-16.
- Reinforcement is selected for the moment and for minimum steel (ACI 318-14: 0.0018 Ag for Grade 60), at no more than 3h or 18 in.

Applied Loads	Location	Trib. Width	Dead (0.90)	Floor Live (1.00)	Comments
1 - Uniform (PLF)	--	N/A	20.2	50	Linked from: Joist #15, Support 2

Footing #69

PASSED

Continuous Footing 1' 4" wide x 10" deep -- Long.(2) #4 Bars, Transv:#4 @10(in) O.C.

Level: Foundation | f'c 3,000 psi | rebar Fy 60 ksi | soil 1,500 psf | Wood stem wall 5 1/2" | ACI 318-14

Controls: Depth Above Bars 89% used

Adequacy 80.4% (capacity to spare)

WHAT LOADS IT

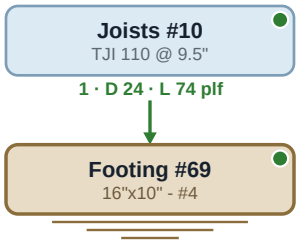

SECTION

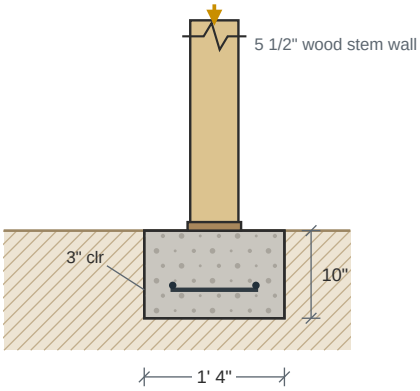

PLAN -- BOTTOM MAT

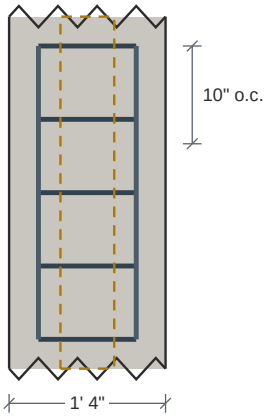

Long.(2) #4 Bars, Transv:#4 @10(in) O.C.

Carrying: Dead 24 plf Floor Live 74 plf

Design Results	Actual	Allowed	Result	Method	Load Combination
Soil Bearing Pressure (psf)	294	1,500	Passed (20% used)	ASD	D+L
One-Way Shear (lbs)	0	6,655	Passed (0% used)	LRFD	1.2D+1.6L+0.5Lr
Moment (ft-lbs)	17	7,036	Passed (0% used)	LRFD	1.2D+1.6L+0.5Lr
Depth Above Bars (in)	6	7	Passed (89% used)	code	ACI 318-14 13.3.1.2

Footing Specification

as entered on the footing, and the mat the check selected

Geometry	
Stem wall type	Wood
Footing width	1' 4"
Footing depth	10"
Stem wall width	5 1/2"
Stem wall height	24"
Stem wall density	145 pcf
Stem wall offset	0

Footing Properties	
Steel yield strength	60,000 psi
Concrete strength	3,000 psi
Soil bearing pressure	1,500 psf
Concrete density	145 pcf
Top reinf. cover	3"
Bottom reinf. cover	3"
Side reinf. cover	3"
Aggregate diameter	3/4"

Soil Properties	
Soil depth above footing	0
Soil density	140 pcf
Soil cohesion	0 psf
Friction angle	30°
Water level	20'

Reinforcement	
Bottom mat	Long.(2) #4 Bars, Transv:#4 @10(in) O.C.
Transverse	#4 @ 10" o.c.
Longitudinal	(2) #4
Selected for	moment and minimum steel
Dowels	(3), bar size not set
Plain concrete (no reinforcing)	No
Override rebar	No
Include water level	No
Allow bearing pressure increase	No

- Soil bearing is checked at service level (ASD) and includes the footing's own weight; shear, moment and crushing at strength level (LRFD), ACI 318-14, loads combined to ASCE 7-16.
- Reinforcement is selected for the moment and for minimum steel (ACI 318-14: 0.0018 Ag for Grade 60), at no more than 3h or 18 in.

Applied Loads	Location	Trib. Width	Dead (0.90)	Floor Live (1.00)	Comments
1 - Uniform (PLF)	--	N/A	24.4	74.1	Linked from: Joists #10, Support 1

Footing #70

PASSED

Continuous Footing 1' 4" wide x 10" deep -- Long.(2) #4 Bars, Transv:#4 @10(in) O.C.

Level: Foundation | f'c 3,000 psi | rebar Fy 60 ksi | soil 1,500 psf | Wood stem wall 3 1/2" | ACI 318-14

Controls: Depth Above Bars 89% used

Adequacy 66.1% (capacity to spare)

WHAT LOADS IT

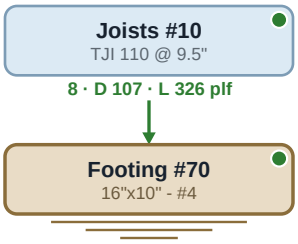

SECTION

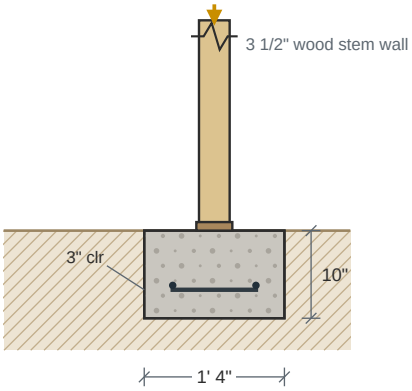

PLAN -- BOTTOM MAT

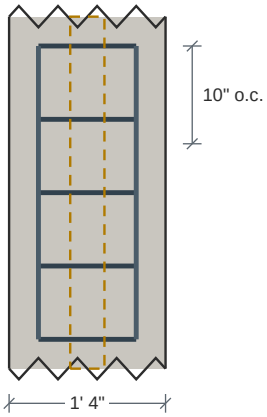

Long.(2) #4 Bars, Transv:#4 @10(in) O.C.

Carrying: Dead 107 plf Floor Live 326 plf

Design Results	Actual	Allowed	Result	Method	Load Combination
Soil Bearing Pressure (psf)	509	1,500	Passed (34% used)	ASD	D+L
One-Way Shear (lbs)	0	6,655	Passed (0% used)	LRFD	1.2D+1.6L+0.5Lr
Moment (ft-lbs)	86	7,036	Passed (1% used)	LRFD	1.2D+1.6L+0.5Lr
Depth Above Bars (in)	6	7	Passed (89% used)	code	ACI 318-14 13.3.1.2

Footing Specification

as entered on the footing, and the mat the check selected

Geometry	
Stem wall type	Wood
Footing width	1' 4"
Footing depth	10"
Stem wall width	3 1/2"
Stem wall height	24"
Stem wall density	145 pcf
Stem wall offset	0

Footing Properties	
Steel yield strength	60,000 psi
Concrete strength	3,000 psi
Soil bearing pressure	1,500 psf
Concrete density	145 pcf
Top reinf. cover	3"
Bottom reinf. cover	3"
Side reinf. cover	3"
Aggregate diameter	3/4"

Soil Properties	
Soil depth above footing	0
Soil density	140 pcf
Soil cohesion	0 psf
Friction angle	30°
Water level	20'

Reinforcement	
Bottom mat	Long.(2) #4 Bars, Transv:#4 @10(in) O.C.
Transverse	#4 @ 10" o.c.
Longitudinal	(2) #4
Selected for	moment and minimum steel
Dowels	(3), bar size not set
Plain concrete (no reinforcing)	No
Override rebar	No
Include water level	No
Allow bearing pressure increase	No

- Soil bearing is checked at service level (ASD) and includes the footing's own weight; shear, moment and crushing at strength level (LRFD), ACI 318-14, loads combined to ASCE 7-16.
- Reinforcement is selected for the moment and for minimum steel (ACI 318-14: 0.0018 Ag for Grade 60), at no more than 3h or 18 in.

Applied Loads	Location	Trib. Width	Dead (0.90)	Floor Live (1.00)	Comments
1 - Uniform (PLF)	--	N/A	107	325.6	Linked from: Joists #10, Support 8

SpotFtg - FP #1

PASSED

Spot Footing 11' 6" x 3' 6" x 10" deep -- Bot.(4) #4 Long, (13) #4 Short - 7 of the Short in the center 3.5 ft

Controls: Depth Above Bars 89% used
Adequacy 91.1% (capacity to spare)

Level: Foundation | f'c 3,000 psi | rebar Fy 60 ksi | soil 1,500 psf | Wood column 120" x 5 1/2" | ACI 318-14

SECTION

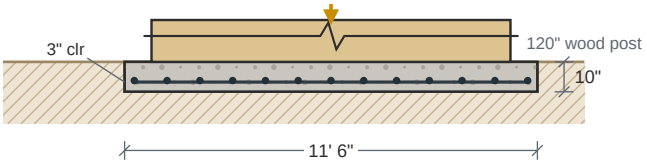

PLAN -- BOTTOM MAT

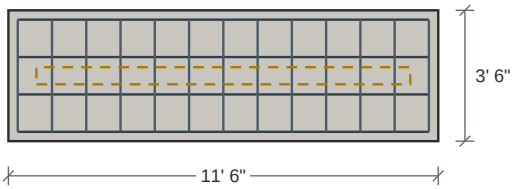

Bot.(4) #4 Long, (13) #4 Short - 7 of the Short in the center 3.5 ft

Carrying: Dead 480 lb

Design Results	Actual	Allowed	Result	Method	Load Combination
Soil Bearing Pressure (psf)	133	1,500	Passed (9% used)	ASD	D
One-Way Shear X (lbs)	192	70,862	Passed (0% used)	LRFD	1.4D
One-Way Shear Y (lbs)	13	21,567	Passed (0% used)	LRFD	1.4D
Two-Way Shear (lbs)	496	161,486	Passed (0% used)	LRFD	1.4D
Moment X (ft-lbs)	257	70,532	Passed (0% used)	LRFD	1.4D
Moment Y (ft-lbs)	309	21,693	Passed (1% used)	LRFD	1.4D
Crushing (lbs)	672	2,187,900	Passed (0% used)	LRFD	1.4D
Depth Above Bars (in)	6	7	Passed (89% used)	code	ACI 318-14 13.3.1.2

Footing Specification

as entered on the footing, and the mat the check selected

Geometry	
Shape	Square
Column type	Wood
Footing width	11' 6"
Footing length	3' 6"
Footing depth	10"
Column width	120"
Column length	5 1/2"
Pedestal height	4"
Pedestal width	4"
Pedestal length	4"

Footing Properties	
Steel yield strength	60,000 psi
Concrete strength	3,000 psi
Soil bearing pressure	1,500 psf
Concrete density	145 pcf
Top reinf. cover	3"
Bottom reinf. cover	3"
Side reinf. cover	3"
Aggregate diameter	3/4"

Soil Properties	
Soil depth above footing	0
Soil density	140 pcf
Soil cohesion	0 psf
Friction angle	30°
Water level	0

Reinforcement	
Bottom mat	Bot.(4) #4 Long, (13) #4 Short - 7 of the Short
Bars the long way	(4) #4
Bars the short way	(13) #4
Selected for	moment and minimum steel
Plain concrete (no reinforcing)	No
Override rebar	No
Include water level	No
Allow bearing pressure increase	No

- Soil bearing is checked at service level (ASD) and includes the footing's own weight; shear, moment and crushing at strength level (LRFD), ACI 318-14, loads combined to ASCE 7-16.
- Reinforcement is selected for the moment and for minimum steel (ACI 318-14: 0.0018 Ag for Grade 60), at no more than 3h or 18 in.
- Wood post: check bearing on the post itself, its Fc-perp can govern below the concrete value.

Applied Loads	Location	Trib. Width	Dead (0.90)	Comments
1 - Point (lb)	--	N/A	480	

SpotFtg Bm #1-1

PASSED

Spot Footing 2' 6" x 2' 6" x 10" deep -- Bot.(3) #4 Long, (3) #4 Short

Level: Foundation | f'c 3,000 psi | rebar Fy 60 ksi | soil 1,500 psf | Concrete column 8" x 8" | ACI 318-14

Controls: Soil Bearing Pressure 98% used

Adequacy 2.4% (capacity to spare)

WHAT LOADS IT

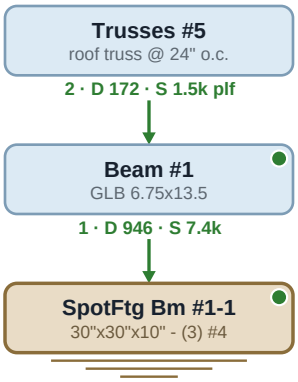

SECTION

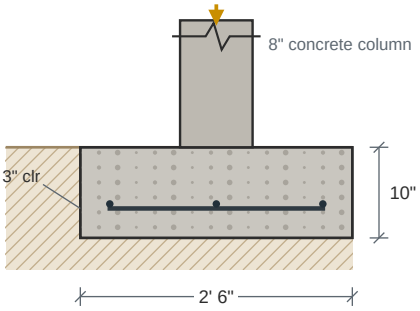

PLAN -- BOTTOM MAT

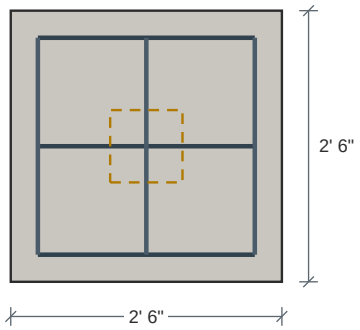

Bot.(3) #4 Long, (3) #4 Short

Carrying: Dead 946 lb Snow 7,447 lb

Design Results	Actual	Allowed	Result	Method	Load Combination
Soil Bearing Pressure (psf)	1,464	1,500	Passed (98% used)	ASD	D+S
One-Way Shear X (lbs)	2,066	15,405	Passed (13% used)	LRFD	1.2D+1.6S+L
One-Way Shear Y (lbs)	2,066	15,405	Passed (13% used)	LRFD	1.2D+1.6S+L
Two-Way Shear (lbs)	10,001	61,947	Passed (16% used)	LRFD	1.2D+1.6S+L
Moment X (ft-lbs)	2,193	16,240	Passed (14% used)	LRFD	1.2D+1.6S+L
Moment Y (ft-lbs)	2,193	16,240	Passed (14% used)	LRFD	1.2D+1.6S+L
Crushing (lbs)	13,049	212,160	Passed (6% used)	LRFD	1.2D+1.6S+L
Depth Above Bars (in)	6	7	Passed (89% used)	code	ACI 318-14 13.3.1.2

Footing Specification

as entered on the footing, and the mat the check selected

Geometry	
Shape	Square
Column type	Concrete
Footing width	2' 6"
Footing length	2' 6"
Footing depth	10"
Column width	8"
Column length	8"
Pedestal height	4"
Pedestal width	4"
Pedestal length	4"

Footing Properties	
Steel yield strength	60,000 psi
Concrete strength	3,000 psi
Soil bearing pressure	1,500 psf
Concrete density	145 pcf
Top reinf. cover	3"
Bottom reinf. cover	3"
Side reinf. cover	3"
Aggregate diameter	3/4"

Soil Properties	
Soil depth above footing	0
Soil density	140 pcf
Soil cohesion	0 psf
Friction angle	30°
Water level	0

Reinforcement	
Bottom mat	Bot.(3) #4 Long, (3) #4 Short
Bars the long way	(3) #4
Bars the short way	(3) #4
Selected for	moment and minimum steel
Plain concrete (no reinforcing)	No
Override rebar	No
Include water level	No
Allow bearing pressure increase	No

- Soil bearing is checked at service level (ASD) and includes the footing's own weight; shear, moment and crushing at strength level (LRFD), ACI 318-14, loads combined to ASCE 7-16.
- Reinforcement is selected for the moment and for minimum steel (ACI 318-14: 0.0018 Ag for Grade 60), at no more than 3h or 18 in.

Applied Loads	Location	Trib. Width	Dead (0.90)	Snow (1.15)	Comments
1 - Point (lb)	--	N/A	945.7	7,447	Linked from: Beam #1, Support 1

SpotFtg Bm #1-2

Spot Footing 4' 6" x 4' 6" x 10" deep -- Bot.(5) #4 Long, (5) #4 Short

Level: Foundation | f'c 3,000 psi | rebar Fy 60 ksi | soil 1,500 psf | Wood column 9 1/2" x 9 1/2" | ACI 318-14

PASSED

Controls: Depth Above Bars 89% used
Adequacy 16.1% (capacity to spare)

WHAT LOADS IT

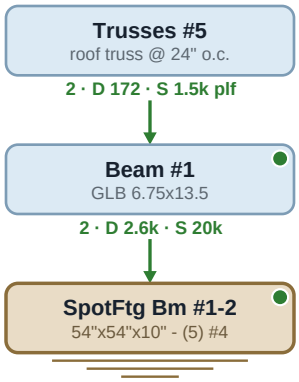

SECTION

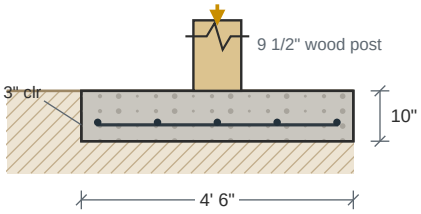

PLAN -- BOTTOM MAT

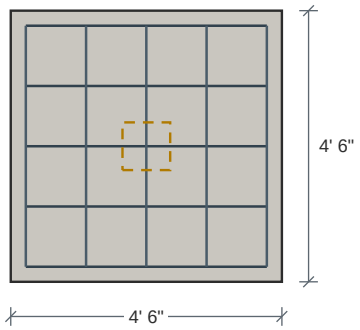

Bot.(5) #4 Long, (5) #4 Short

Carrying: Dead 2,595 lb Snow 20,437 lb

Design Results	Actual	Allowed	Result	Method	Load Combination
Soil Bearing Pressure (psf)	1,258	1,500	Passed (84% used)	ASD	D+S
One-Way Shear X (lbs)	10,611	27,728	Passed (38% used)	LRFD	1.2D+1.6S+L
One-Way Shear Y (lbs)	10,611	27,728	Passed (38% used)	LRFD	1.2D+1.6S+L
Two-Way Shear (lbs)	32,670	68,356	Passed (48% used)	LRFD	1.2D+1.6S+L
Moment X (ft-lbs)	16,757	27,145	Passed (62% used)	LRFD	1.2D+1.6S+L
Moment Y (ft-lbs)	16,757	27,145	Passed (62% used)	LRFD	1.2D+1.6S+L
Crushing (lbs)	35,814	299,179	Passed (12% used)	LRFD	1.2D+1.6S+L
Depth Above Bars (in)	6	7	Passed (89% used)	code	ACI 318-14 13.3.1.2

Footing Specification

as entered on the footing, and the mat the check selected

Geometry	
Shape	Square
Column type	Wood
Footing width	4' 6"
Footing length	4' 6"
Footing depth	10"
Column width	9 1/2"
Column length	9 1/2"
Pedestal height	4"
Pedestal width	4"
Pedestal length	4"

Footing Properties	
Steel yield strength	60,000 psi
Concrete strength	3,000 psi
Soil bearing pressure	1,500 psf
Concrete density	145 pcf
Top reinf. cover	3"
Bottom reinf. cover	3"
Side reinf. cover	3"
Aggregate diameter	3/4"

Soil Properties and Post	
Soil depth above footing	0
Soil density	140 pcf
Soil cohesion	0 psf
Friction angle	30°
Water level	0
Post	10x10 post
Post base	fabricated
Cap	(2) HL55, p. 315

Reinforcement	
Bottom mat	Bot.(5) #4 Long, (5) #4 Short
Bars the long way	(5) #4
Bars the short way	(5) #4
Selected for	moment and minimum steel
Plain concrete (no reinforcing)	No
Override rebar	No
Include water level	No
Allow bearing pressure increase	No

- Soil bearing is checked at service level (ASD) and includes the footing's own weight; shear, moment and crushing at strength level (LRFD), ACI 318-14, loads combined to ASCE 7-16.
- Reinforcement is selected for the moment and for minimum steel (ACI 318-14: 0.0018 Ag for Grade 60), at no more than 3h or 18 in.
- Wood post: check bearing on the post itself, its Fc-perp can govern below the concrete value.

Applied Loads	Location	Trib. Width	Dead (0.90)	Snow (1.15)	Comments
1 - Point (lb)	--	N/A	2,595	20,437	Linked from: Beam #1, Support 2

SpotFtg Bm #1-3

PASSED

Spot Footing 4' 6" x 4' 6" x 10" deep -- Bot.(5) #4 Long, (5) #4 Short

Level: Foundation | f'c 3,000 psi | rebar Fy 60 ksi | soil 1,500 psf | Wood column 9 1/2" x 9 1/2" | ACI 318-14

Controls: Depth Above Bars 89% used
Adequacy 15.7% (capacity to spare)

WHAT LOADS IT

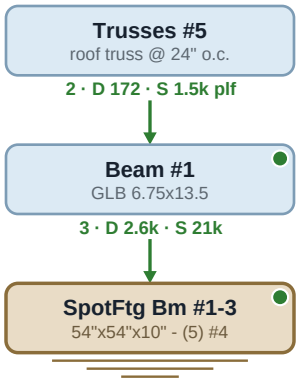

SECTION

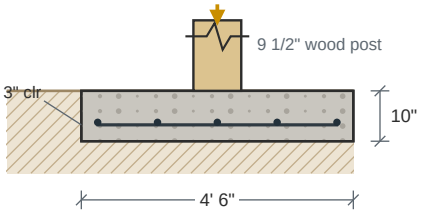

PLAN -- BOTTOM MAT

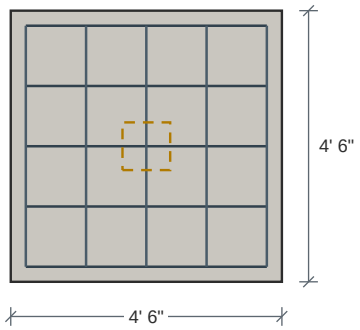

Bot.(5) #4 Long, (5) #4 Short

Carrying: Dead 2,611 lb Snow 20,558 lb

Design Results	Actual	Allowed	Result	Method	Load Combination
Soil Bearing Pressure (psf)	1,265	1,500	Passed (84% used)	ASD	D+S
One-Way Shear X (lbs)	10,675	27,728	Passed (38% used)	LRFD	1.2D+1.6S+L
One-Way Shear Y (lbs)	10,675	27,728	Passed (38% used)	LRFD	1.2D+1.6S+L
Two-Way Shear (lbs)	32,864	68,356	Passed (48% used)	LRFD	1.2D+1.6S+L
Moment X (ft-lbs)	16,857	27,145	Passed (62% used)	LRFD	1.2D+1.6S+L
Moment Y (ft-lbs)	16,857	27,145	Passed (62% used)	LRFD	1.2D+1.6S+L
Crushing (lbs)	36,027	299,179	Passed (12% used)	LRFD	1.2D+1.6S+L
Depth Above Bars (in)	6	7	Passed (89% used)	code	ACI 318-14 13.3.1.2

Footing Specification

as entered on the footing, and the mat the check selected

Geometry	
Shape	Square
Column type	Wood
Footing width	4' 6"
Footing length	4' 6"
Footing depth	10"
Column width	9 1/2"
Column length	9 1/2"
Pedestal height	4"
Pedestal width	4"
Pedestal length	4"

Footing Properties	
Steel yield strength	60,000 psi
Concrete strength	3,000 psi
Soil bearing pressure	1,500 psf
Concrete density	145 pcf
Top reinf. cover	3"
Bottom reinf. cover	3"
Side reinf. cover	3"
Aggregate diameter	3/4"

Soil Properties and Post	
Soil depth above footing	0
Soil density	140 pcf
Soil cohesion	0 psf
Friction angle	30°
Water level	0
Post	10x10 post
Post base	fabricated
Cap	(2) HL55, p. 315

Reinforcement	
Bottom mat	Bot.(5) #4 Long, (5) #4 Short
Bars the long way	(5) #4
Bars the short way	(5) #4
Selected for	moment and minimum steel
Plain concrete (no reinforcing)	No
Override rebar	No
Include water level	No
Allow bearing pressure increase	No

- Soil bearing is checked at service level (ASD) and includes the footing's own weight; shear, moment and crushing at strength level (LRFD), ACI 318-14, loads combined to ASCE 7-16.
- Reinforcement is selected for the moment and for minimum steel (ACI 318-14: 0.0018 Ag for Grade 60), at no more than 3h or 18 in.
- Wood post: check bearing on the post itself, its Fc-perp can govern below the concrete value.

Applied Loads	Location	Trib. Width	Dead (0.90)	Snow (1.15)	Comments
1 - Point (lb)	--	N/A	2,611	20,558	Linked from: Beam #1, Support 3

SpotFtg Bm #1-4

Spot Footing 2' 6" x 2' 6" x 10" deep -- Bot.(3) #4 Long, (3) #4 Short

Level: Foundation | f'c 3,000 psi | rebar Fy 60 ksi | soil 1,500 psf | Concrete column 8" x 8" | ACI 318-14

PASSED

Controls: Soil Bearing Pressure 98% used
Adequacy 1.8% (capacity to spare)

WHAT LOADS IT

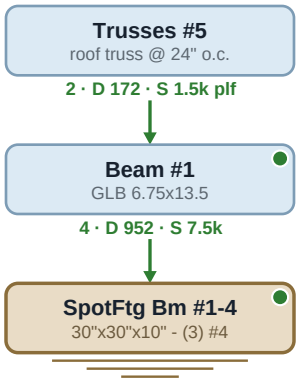

SECTION

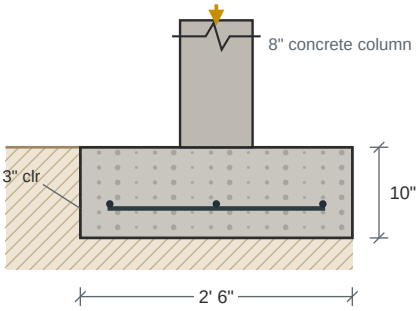

PLAN -- BOTTOM MAT

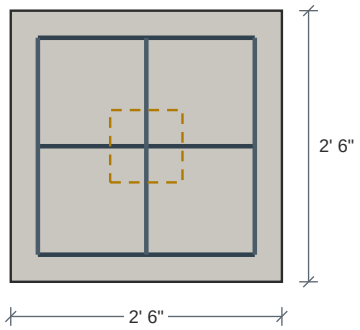

Bot.(3) #4 Long, (3) #4 Short

Carrying: Dead 952 lb Snow 7,500 lb

Design Results	Actual	Allowed	Result	Method	Load Combination
Soil Bearing Pressure (psf)	1,473	1,500	Passed (98% used)	ASD	D+S
One-Way Shear X (lbs)	2,081	15,405	Passed (14% used)	LRFD	1.2D+1.6S+L
One-Way Shear Y (lbs)	2,081	15,405	Passed (14% used)	LRFD	1.2D+1.6S+L
Two-Way Shear (lbs)	10,072	61,947	Passed (16% used)	LRFD	1.2D+1.6S+L
Moment X (ft-lbs)	2,209	16,240	Passed (14% used)	LRFD	1.2D+1.6S+L
Moment Y (ft-lbs)	2,209	16,240	Passed (14% used)	LRFD	1.2D+1.6S+L
Crushing (lbs)	13,142	212,160	Passed (6% used)	LRFD	1.2D+1.6S+L
Depth Above Bars (in)	6	7	Passed (89% used)	code	ACI 318-14 13.3.1.2

Footing Specification

as entered on the footing, and the mat the check selected

Geometry	
Shape	Square
Column type	Concrete
Footing width	2' 6"
Footing length	2' 6"
Footing depth	10"
Column width	8"
Column length	8"
Pedestal height	4"
Pedestal width	4"
Pedestal length	4"

Footing Properties	
Steel yield strength	60,000 psi
Concrete strength	3,000 psi
Soil bearing pressure	1,500 psf
Concrete density	145 pcf
Top reinf. cover	3"
Bottom reinf. cover	3"
Side reinf. cover	3"
Aggregate diameter	3/4"

Soil Properties	
Soil depth above footing	0
Soil density	140 pcf
Soil cohesion	0 psf
Friction angle	30°
Water level	0

Reinforcement	
Bottom mat	Bot.(3) #4 Long, (3) #4 Short
Bars the long way	(3) #4
Bars the short way	(3) #4
Selected for	moment and minimum steel
Plain concrete (no reinforcing)	No
Override rebar	No
Include water level	No
Allow bearing pressure increase	No

- Soil bearing is checked at service level (ASD) and includes the footing's own weight; shear, moment and crushing at strength level (LRFD), ACI 318-14, loads combined to ASCE 7-16.
- Reinforcement is selected for the moment and for minimum steel (ACI 318-14: 0.0018 Ag for Grade 60), at no more than 3h or 18 in.

Applied Loads	Location	Trib. Width	Dead (0.90)	Snow (1.15)	Comments
1 - Point (lb)	--	N/A	952.5	7,500	Linked from: Beam #1, Support 4

SpotFtg Bm #2-1

PASSED

Spot Footing 4' x 4' x 10" deep -- Bot.(5) #4 Long, (5) #4 Short

Level: Foundation | f'c 3,000 psi | rebar Fy 60 ksi | soil 1,500 psf | Wood column 5 1/2" x 7 1/2" | ACI 318-14

Controls: Depth Above Bars 89% used

Adequacy 17.6% (capacity to spare)

WHAT LOADS IT

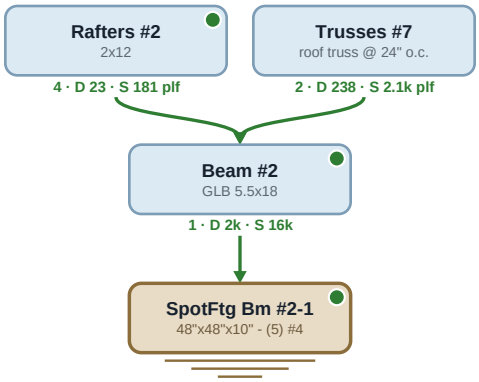

SECTION

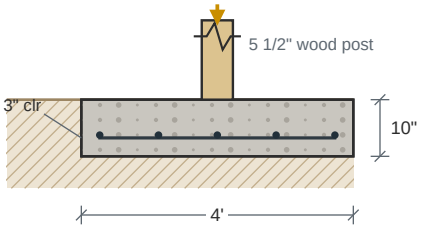

PLAN -- BOTTOM MAT

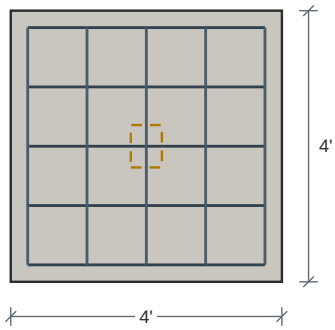

Bot.(5) #4 Long, (5) #4 Short

Carrying: Dead 1,971 lb Snow 15,869 lb

Design Results	Actual	Allowed	Result	Method	Load Combination
Soil Bearing Pressure (psf)	1,236	1,500	Passed (82% used)	ASD	D+S
One-Way Shear X (lbs)	8,096	24,648	Passed (33% used)	LRFD	1.2D+1.6S+L
One-Way Shear Y (lbs)	8,674	24,648	Passed (35% used)	LRFD	1.2D+1.6S+L
Two-Way Shear (lbs)	25,732	55,539	Passed (46% used)	LRFD	1.2D+1.6S+L
Moment X (ft-lbs)	11,794	27,022	Passed (44% used)	LRFD	1.2D+1.6S+L
Moment Y (ft-lbs)	12,333	27,022	Passed (46% used)	LRFD	1.2D+1.6S+L
Crushing (lbs)	27,756	136,744	Passed (20% used)	LRFD	1.2D+1.6S+L
Depth Above Bars (in)	6	7	Passed (89% used)	code	ACI 318-14 13.3.1.2

Footing Specification

as entered on the footing, and the mat the check selected

Geometry	
Shape	Square
Column type	Wood
Footing width	4'
Footing length	4'
Footing depth	10"
Column width	5 1/2"
Column length	7 1/2"
Pedestal height	4"
Pedestal width	4"
Pedestal length	4"

Footing Properties	
Steel yield strength	60,000 psi
Concrete strength	3,000 psi
Soil bearing pressure	1,500 psf
Concrete density	145 pcf
Top reinf. cover	3"
Bottom reinf. cover	3"
Side reinf. cover	3"
Aggregate diameter	3/4"

Soil Properties	
Soil depth above footing	0
Soil density	140 pcf
Soil cohesion	0 psf
Friction angle	30°
Water level	0

Reinforcement	
Bottom mat	Bot.(5) #4 Long, (5) #4 Short
Bars the long way	(5) #4
Bars the short way	(5) #4
Selected for	moment and minimum steel
Plain concrete (no reinforcing)	No
Override rebar	No
Include water level	No
Allow bearing pressure increase	No

- Soil bearing is checked at service level (ASD) and includes the footing's own weight; shear, moment and crushing at strength level (LRFD), ACI 318-14, loads combined to ASCE 7-16.
- Reinforcement is selected for the moment and for minimum steel (ACI 318-14: 0.0018 Ag for Grade 60), at no more than 3h or 18 in.
- Wood post: check bearing on the post itself, its Fc-perp can govern below the concrete value.

Applied Loads	Location	Trib. Width	Dead (0.90)	Snow (1.15)	Comments
1 - Point (lb)	--	N/A	1,971	15,869	Linked from: Beam #2, Support 1

SpotFtg Bm #2-2

Spot Footing 4' x 4' x 10" deep -- Bot.(5) #4 Long, (5) #4 Short

Level: Foundation | f'c 3,000 psi | rebar Fy 60 ksi | soil 1,500 psf | Wood column 5 1/2" x 7 1/2" | ACI 318-14

PASSED

Controls: Soil Bearing Pressure 96% used

Adequacy 3.7% (capacity to spare)

WHAT LOADS IT

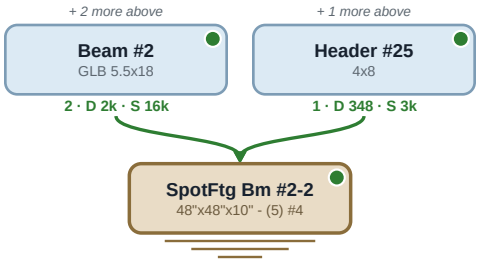

SECTION

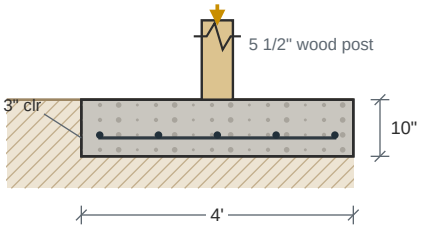

PLAN -- BOTTOM MAT

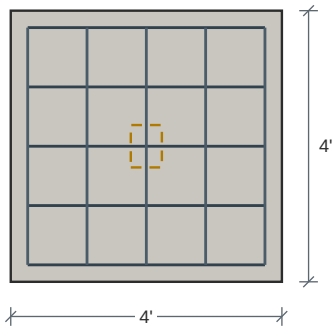

Bot.(5) #4 Long, (5) #4 Short

Carrying: Dead 2,320 lb Snow 18,852 lb

Design Results	Actual	Allowed	Result	Method	Load Combination
Soil Bearing Pressure (psf)	1,444	1,500	Passed (96% used)	ASD	D+S
One-Way Shear X (lbs)	9,610	24,648	Passed (39% used)	LRFD	1.2D+1.6S+L
One-Way Shear Y (lbs)	10,296	24,648	Passed (42% used)	LRFD	1.2D+1.6S+L
Two-Way Shear (lbs)	30,544	55,539	Passed (55% used)	LRFD	1.2D+1.6S+L
Moment X (ft-lbs)	14,000	27,022	Passed (52% used)	LRFD	1.2D+1.6S+L
Moment Y (ft-lbs)	14,640	27,022	Passed (54% used)	LRFD	1.2D+1.6S+L
Crushing (lbs)	32,947	136,744	Passed (24% used)	LRFD	1.2D+1.6S+L
Depth Above Bars (in)	6	7	Passed (89% used)	code	ACI 318-14 13.3.1.2

Footing Specification

as entered on the footing, and the mat the check selected

Geometry	
Shape	Square
Column type	Wood
Footing width	4'
Footing length	4'
Footing depth	10"
Column width	5 1/2"
Column length	7 1/2"
Pedestal height	4"
Pedestal width	4"
Pedestal length	4"

Footing Properties	
Steel yield strength	60,000 psi
Concrete strength	3,000 psi
Soil bearing pressure	1,500 psf
Concrete density	145 pcf
Top reinf. cover	3"
Bottom reinf. cover	3"
Side reinf. cover	3"
Aggregate diameter	3/4"

Soil Properties	
Soil depth above footing	0
Soil density	140 pcf
Soil cohesion	0 psf
Friction angle	30°
Water level	0

Reinforcement	
Bottom mat	Bot.(5) #4 Long, (5) #4 Short
Bars the long way	(5) #4
Bars the short way	(5) #4
Selected for	moment and minimum steel
Plain concrete (no reinforcing)	No
Override rebar	No
Include water level	No
Allow bearing pressure increase	No

- Soil bearing is checked at service level (ASD) and includes the footing's own weight; shear, moment and crushing at strength level (LRFD), ACI 318-14, loads combined to ASCE 7-16.
- Reinforcement is selected for the moment and for minimum steel (ACI 318-14: 0.0018 Ag for Grade 60), at no more than 3h or 18 in.
- Wood post: check bearing on the post itself, its Fc-perp can govern below the concrete value.

Applied Loads	Location	Trib. Width	Dead (0.90)	Snow (1.15)	Comments
1 - Point (lb)	--	N/A	1,971	15,869	Linked from: Beam #2, Support 2
2 - Point (lb)	--	N/A	348.2	2,983	Linked from: Header #25, Support 1

SpotFtg Bm #3-1

PASSED

Spot Footing 2' 6" x 2' 6" x 10" deep -- Bot.(3) #4 Long, (3) #4 Short

Level: Foundation | f'c 3,000 psi | rebar Fy 60 ksi | soil 1,500 psf | Concrete column 8" x 8" | ACI 318-14

Controls: Depth Above Bars 89% used
Adequacy 22.7% (capacity to spare)

WHAT LOADS IT

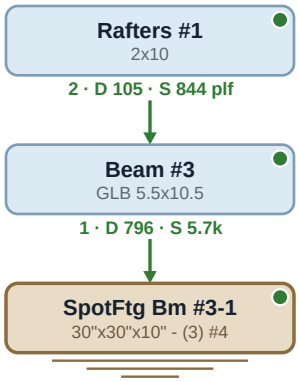

SECTION

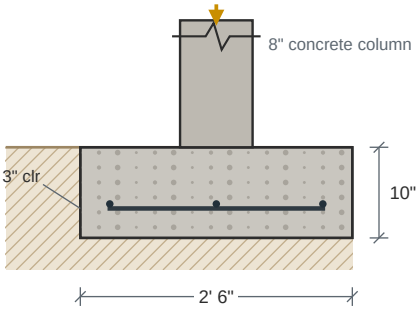

PLAN -- BOTTOM MAT

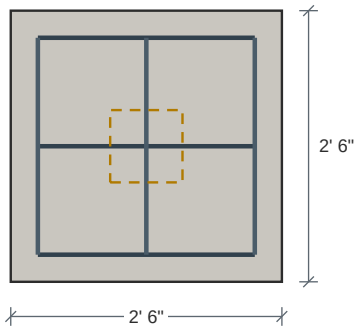

Bot.(3) #4 Long, (3) #4 Short

Carrying: Dead 796 lb Snow 5,695 lb

Design Results	Actual	Allowed	Result	Method	Load Combination
Soil Bearing Pressure (psf)	1,160	1,500	Passed (77% used)	ASD	D+S
One-Way Shear X (lbs)	1,594	15,405	Passed (10% used)	LRFD	1.2D+1.6S+L
One-Way Shear Y (lbs)	1,594	15,405	Passed (10% used)	LRFD	1.2D+1.6S+L
Two-Way Shear (lbs)	7,716	61,947	Passed (12% used)	LRFD	1.2D+1.6S+L
Moment X (ft-lbs)	1,692	16,240	Passed (10% used)	LRFD	1.2D+1.6S+L
Moment Y (ft-lbs)	1,692	16,240	Passed (10% used)	LRFD	1.2D+1.6S+L
Crushing (lbs)	10,068	212,160	Passed (5% used)	LRFD	1.2D+1.6S+L
Depth Above Bars (in)	6	7	Passed (89% used)	code	ACI 318-14 13.3.1.2

Footing Specification

as entered on the footing, and the mat the check selected

Geometry	
Shape	Square
Column type	Concrete
Footing width	2' 6"
Footing length	2' 6"
Footing depth	10"
Column width	8"
Column length	8"
Pedestal height	4"
Pedestal width	4"
Pedestal length	4"

Footing Properties	
Steel yield strength	60,000 psi
Concrete strength	3,000 psi
Soil bearing pressure	1,500 psf
Concrete density	145 pcf
Top reinf. cover	3"
Bottom reinf. cover	3"
Side reinf. cover	3"
Aggregate diameter	3/4"

Soil Properties	
Soil depth above footing	0
Soil density	140 pcf
Soil cohesion	0 psf
Friction angle	30°
Water level	0

Reinforcement	
Bottom mat	Bot.(3) #4 Long, (3) #4 Short
Bars the long way	(3) #4
Bars the short way	(3) #4
Selected for	moment and minimum steel
Plain concrete (no reinforcing)	No
Override rebar	No
Include water level	No
Allow bearing pressure increase	No

- Soil bearing is checked at service level (ASD) and includes the footing's own weight; shear, moment and crushing at strength level (LRFD), ACI 318-14, loads combined to ASCE 7-16.
- Reinforcement is selected for the moment and for minimum steel (ACI 318-14: 0.0018 Ag for Grade 60), at no more than 3h or 18 in.

Applied Loads	Location	Trib. Width	Dead (0.90)	Snow (1.15)	Comments
1 - Point (lb)	--	N/A	796.5	5,695	Linked from: Beam #3, Support 1

SpotFtg Bm #3-2

Spot Footing 2' 6" x 2' 6" x 10" deep -- Bot.(3) #4 Long, (3) #4 Short

Level: Foundation | f'c 3,000 psi | rebar Fy 60 ksi | soil 1,500 psf | Concrete column 8" x 8" | ACI 318-14

PASSED

Controls: Depth Above Bars 89% used

Adequacy 22.7% (capacity to spare)

WHAT LOADS IT

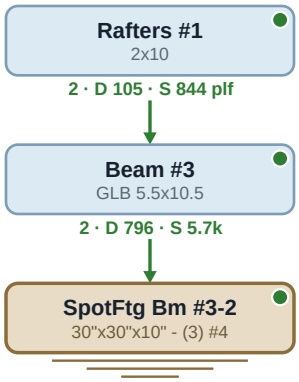

SECTION

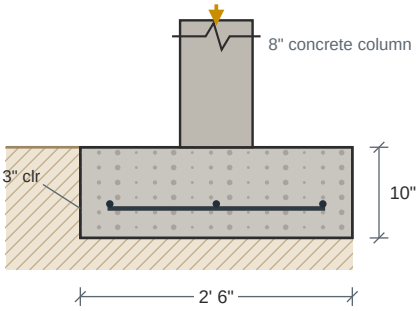

PLAN -- BOTTOM MAT

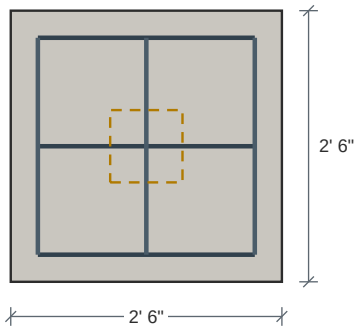

Bot.(3) #4 Long, (3) #4 Short

Carrying: Dead 796 lb Snow 5,695 lb

Design Results	Actual	Allowed	Result	Method	Load Combination
Soil Bearing Pressure (psf)	1,160	1,500	Passed (77% used)	ASD	D+S
One-Way Shear X (lbs)	1,594	15,405	Passed (10% used)	LRFD	1.2D+1.6S+L
One-Way Shear Y (lbs)	1,594	15,405	Passed (10% used)	LRFD	1.2D+1.6S+L
Two-Way Shear (lbs)	7,716	61,947	Passed (12% used)	LRFD	1.2D+1.6S+L
Moment X (ft-lbs)	1,692	16,240	Passed (10% used)	LRFD	1.2D+1.6S+L
Moment Y (ft-lbs)	1,692	16,240	Passed (10% used)	LRFD	1.2D+1.6S+L
Crushing (lbs)	10,068	212,160	Passed (5% used)	LRFD	1.2D+1.6S+L
Depth Above Bars (in)	6	7	Passed (89% used)	code	ACI 318-14 13.3.1.2

Footing Specification

as entered on the footing, and the mat the check selected

Geometry	
Shape	Square
Column type	Concrete
Footing width	2' 6"
Footing length	2' 6"
Footing depth	10"
Column width	8"
Column length	8"
Pedestal height	4"
Pedestal width	4"
Pedestal length	4"

Footing Properties	
Steel yield strength	60,000 psi
Concrete strength	3,000 psi
Soil bearing pressure	1,500 psf
Concrete density	145 pcf
Top reinf. cover	3"
Bottom reinf. cover	3"
Side reinf. cover	3"
Aggregate diameter	3/4"

Soil Properties	
Soil depth above footing	0
Soil density	140 pcf
Soil cohesion	0 psf
Friction angle	30°
Water level	0

Reinforcement	
Bottom mat	Bot.(3) #4 Long, (3) #4 Short
Bars the long way	(3) #4
Bars the short way	(3) #4
Selected for	moment and minimum steel
Plain concrete (no reinforcing)	No
Override rebar	No
Include water level	No
Allow bearing pressure increase	No

- Soil bearing is checked at service level (ASD) and includes the footing's own weight; shear, moment and crushing at strength level (LRFD), ACI 318-14, loads combined to ASCE 7-16.
- Reinforcement is selected for the moment and for minimum steel (ACI 318-14: 0.0018 Ag for Grade 60), at no more than 3h or 18 in.

Applied Loads	Location	Trib. Width	Dead (0.90)	Snow (1.15)	Comments
1 - Point (lb)	--	N/A	796.5	5,695	Linked from: Beam #3, Support 2

SpotFtg Bm #4-1

PASSED

Spot Footing 2' 6" x 2' 6" x 10" deep -- Bot.(3) #4 Long, (3) #4 Short

Level: Foundation | f'c 3,000 psi | rebar Fy 60 ksi | soil 1,500 psf | Concrete column 8" x 8" | ACI 318-14

Controls: Depth Above Bars 89% used
Adequacy 27.9% (capacity to spare)

WHAT LOADS IT

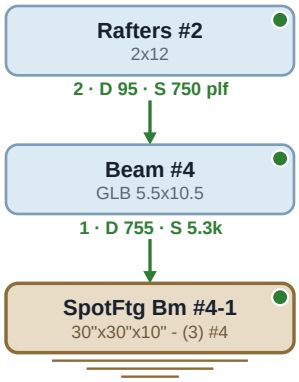

SECTION

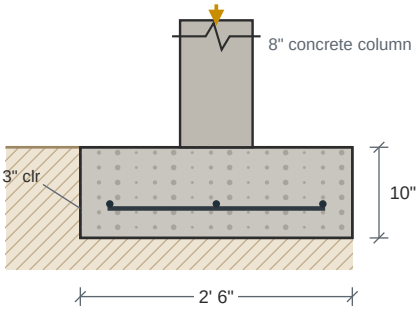

PLAN -- BOTTOM MAT

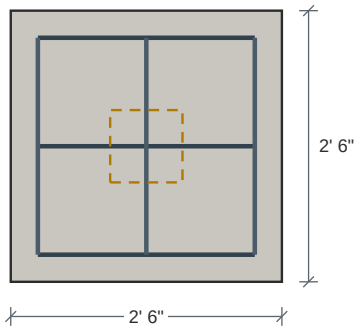

Bot.(3) #4 Long, (3) #4 Short

Carrying: Dead 755 lb Snow 5,253 lb

Design Results	Actual	Allowed	Result	Method	Load Combination
Soil Bearing Pressure (psf)	1,082	1,500	Passed (72% used)	ASD	D+S
One-Way Shear X (lbs)	1,474	15,405	Passed (10% used)	LRFD	1.2D+1.6S+L
One-Way Shear Y (lbs)	1,474	15,405	Passed (10% used)	LRFD	1.2D+1.6S+L
Two-Way Shear (lbs)	7,135	61,947	Passed (12% used)	LRFD	1.2D+1.6S+L
Moment X (ft-lbs)	1,565	16,240	Passed (10% used)	LRFD	1.2D+1.6S+L
Moment Y (ft-lbs)	1,565	16,240	Passed (10% used)	LRFD	1.2D+1.6S+L
Crushing (lbs)	9,310	212,160	Passed (4% used)	LRFD	1.2D+1.6S+L
Depth Above Bars (in)	6	7	Passed (89% used)	code	ACI 318-14 13.3.1.2

Footing Specification

as entered on the footing, and the mat the check selected

Geometry	
Shape	Square
Column type	Concrete
Footing width	2' 6"
Footing length	2' 6"
Footing depth	10"
Column width	8"
Column length	8"
Pedestal height	4"
Pedestal width	4"
Pedestal length	4"

Footing Properties	
Steel yield strength	60,000 psi
Concrete strength	3,000 psi
Soil bearing pressure	1,500 psf
Concrete density	145 pcf
Top reinf. cover	3"
Bottom reinf. cover	3"
Side reinf. cover	3"
Aggregate diameter	3/4"

Soil Properties	
Soil depth above footing	0
Soil density	140 pcf
Soil cohesion	0 psf
Friction angle	30°
Water level	0

Reinforcement	
Bottom mat	Bot.(3) #4 Long, (3) #4 Short
Bars the long way	(3) #4
Bars the short way	(3) #4
Selected for	moment and minimum steel
Plain concrete (no reinforcing)	No
Override rebar	No
Include water level	No
Allow bearing pressure increase	No

- Soil bearing is checked at service level (ASD) and includes the footing's own weight; shear, moment and crushing at strength level (LRFD), ACI 318-14, loads combined to ASCE 7-16.
- Reinforcement is selected for the moment and for minimum steel (ACI 318-14: 0.0018 Ag for Grade 60), at no more than 3h or 18 in.

Applied Loads	Location	Trib. Width	Dead (0.90)	Snow (1.15)	Comments
1 - Point (lb)	--	N/A	754.7	5,253	Linked from: Beam #4, Support 1

SpotFtg Bm #4-2

Spot Footing 2' 6" x 2' 6" x 10" deep -- Bot.(3) #4 Long, (3) #4 Short

Level: Foundation | f'c 3,000 psi | rebar Fy 60 ksi | soil 1,500 psf | Concrete column 8" x 8" | ACI 318-14

PASSED

Controls: Depth Above Bars 89% used
Adequacy 27.9% (capacity to spare)

WHAT LOADS IT

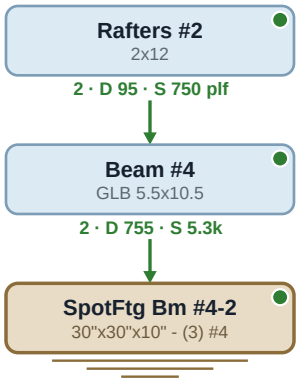

SECTION

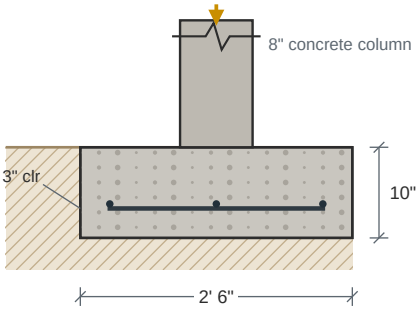

PLAN -- BOTTOM MAT

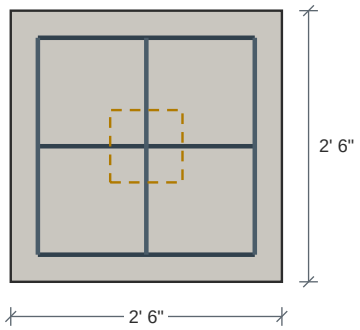

Bot.(3) #4 Long, (3) #4 Short

Carrying: Dead 755 lb Snow 5,253 lb

Design Results	Actual	Allowed	Result	Method	Load Combination
Soil Bearing Pressure (psf)	1,082	1,500	Passed (72% used)	ASD	D+S
One-Way Shear X (lbs)	1,474	15,405	Passed (10% used)	LRFD	1.2D+1.6S+L
One-Way Shear Y (lbs)	1,474	15,405	Passed (10% used)	LRFD	1.2D+1.6S+L
Two-Way Shear (lbs)	7,135	61,947	Passed (12% used)	LRFD	1.2D+1.6S+L
Moment X (ft-lbs)	1,565	16,240	Passed (10% used)	LRFD	1.2D+1.6S+L
Moment Y (ft-lbs)	1,565	16,240	Passed (10% used)	LRFD	1.2D+1.6S+L
Crushing (lbs)	9,310	212,160	Passed (4% used)	LRFD	1.2D+1.6S+L
Depth Above Bars (in)	6	7	Passed (89% used)	code	ACI 318-14 13.3.1.2

Footing Specification

as entered on the footing, and the mat the check selected

Geometry	
Shape	Square
Column type	Concrete
Footing width	2' 6"
Footing length	2' 6"
Footing depth	10"
Column width	8"
Column length	8"
Pedestal height	4"
Pedestal width	4"
Pedestal length	4"

Footing Properties	
Steel yield strength	60,000 psi
Concrete strength	3,000 psi
Soil bearing pressure	1,500 psf
Concrete density	145 pcf
Top reinf. cover	3"
Bottom reinf. cover	3"
Side reinf. cover	3"
Aggregate diameter	3/4"

Soil Properties	
Soil depth above footing	0
Soil density	140 pcf
Soil cohesion	0 psf
Friction angle	30°
Water level	0

Reinforcement	
Bottom mat	Bot.(3) #4 Long, (3) #4 Short
Bars the long way	(3) #4
Bars the short way	(3) #4
Selected for	moment and minimum steel
Plain concrete (no reinforcing)	No
Override rebar	No
Include water level	No
Allow bearing pressure increase	No

- Soil bearing is checked at service level (ASD) and includes the footing's own weight; shear, moment and crushing at strength level (LRFD), ACI 318-14, loads combined to ASCE 7-16.
- Reinforcement is selected for the moment and for minimum steel (ACI 318-14: 0.0018 Ag for Grade 60), at no more than 3h or 18 in.

Applied Loads	Location	Trib. Width	Dead (0.90)	Snow (1.15)	Comments
1 - Point (lb)	--	N/A	754.7	5,253	Linked from: Beam #4, Support 2

SpotFtg Bm #5-1

PASSED

Spot Footing 1' 4" x 1' 4" x 10" deep -- Bot.(2) #4 Long, (2) #4 Short

Level: Foundation | f'c 3,000 psi | rebar Fy 60 ksi | soil 1,500 psf | Wood column 9 1/2" x 9 1/2" | ACI 318-14

Controls: Depth Above Bars 89% used
Adequacy 62.2% (capacity to spare)

WHAT LOADS IT

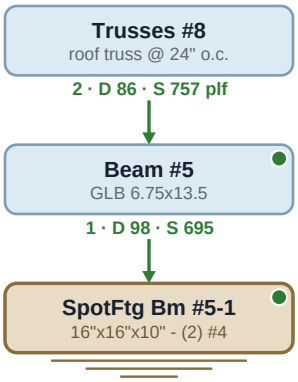

SECTION

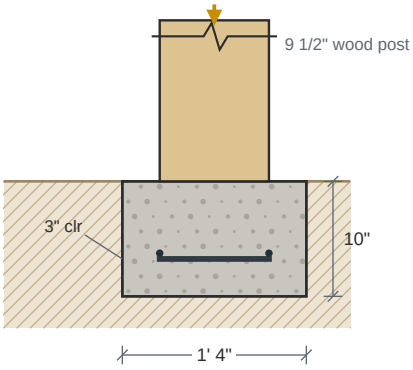

PLAN -- BOTTOM MAT

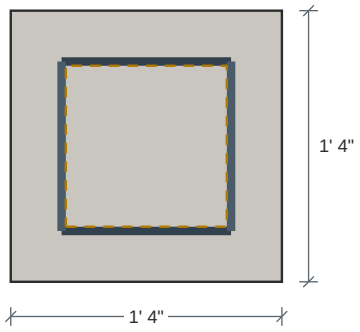

Bot.(2) #4 Long, (2) #4 Short

Carrying: Dead 98 lb Snow 695 lb

Design Results	Actual	Allowed	Result	Method	Load Combination
Soil Bearing Pressure (psf)	567	1,500	Passed (38% used)	ASD	D+S
One-Way Shear X (lbs)	0	8,216	Passed (0% used)	LRFD	1.2D+1.6S+L
One-Way Shear Y (lbs)	0	8,216	Passed (0% used)	LRFD	1.2D+1.6S+L
Moment X (ft-lbs)	101	10,721	Passed (1% used)	LRFD	1.2D+1.6S+L
Moment Y (ft-lbs)	101	10,721	Passed (1% used)	LRFD	1.2D+1.6S+L
Crushing (lbs)	1,230	251,940	Passed (0% used)	LRFD	1.2D+1.6S+L
Depth Above Bars (in)	6	7	Passed (89% used)	code	ACI 318-14 13.3.1.2

Footing Specification

as entered on the footing, and the mat the check selected

Geometry	
Shape	Square
Column type	Wood
Footing width	1' 4"
Footing length	1' 4"
Footing depth	10"
Column width	9 1/2"
Column length	9 1/2"
Pedestal height	4"
Pedestal width	4"
Pedestal length	4"

Footing Properties	
Steel yield strength	60,000 psi
Concrete strength	3,000 psi
Soil bearing pressure	1,500 psf
Concrete density	145 pcf
Top reinf. cover	3"
Bottom reinf. cover	3"
Side reinf. cover	3"
Aggregate diameter	3/4"

Soil Properties and Post	
Soil depth above footing	0
Soil density	140 pcf
Soil cohesion	0 psf
Friction angle	30°
Water level	0
Post	10x10 post
Post base	fabricated
Cap	(1) HL55, p. 315

Reinforcement	
Bottom mat	Bot.(2) #4 Long, (2) #4 Short
Bars the long way	(2) #4
Bars the short way	(2) #4
Selected for	moment and minimum steel
Plain concrete (no reinforcing)	No
Override rebar	No
Include water level	No
Allow bearing pressure increase	No

- Soil bearing is checked at service level (ASD) and includes the footing's own weight; shear, moment and crushing at strength level (LRFD), ACI 318-14, loads combined to ASCE 7-16.
- Reinforcement is selected for the moment and for minimum steel (ACI 318-14: 0.0018 Ag for Grade 60), at no more than 3h or 18 in.
- Wood post: check bearing on the post itself, its Fc-perp can govern below the concrete value.

Applied Loads	Location	Trib. Width	Dead (0.90)	Snow (1.15)	Comments
1 - Point (lb)	--	N/A	97.8	695.2	Linked from: Beam #5, Support 1

SpotFtg Bm #5-2

Spot Footing 3' x 3' x 10" deep -- Bot.(4) #4 Long, (4) #4 Short

Level: Foundation | f'c 3,000 psi | rebar Fy 60 ksi | soil 1,500 psf | Wood column 9 1/2" x 9 1/2" | ACI 318-14

PASSED

Controls: Depth Above Bars 89% used
Adequacy 24.2% (capacity to spare)

WHAT LOADS IT

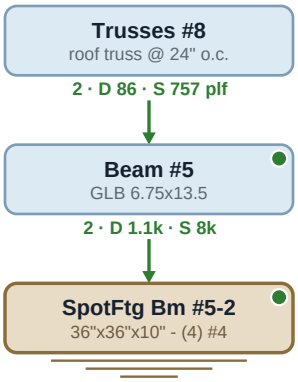

SECTION

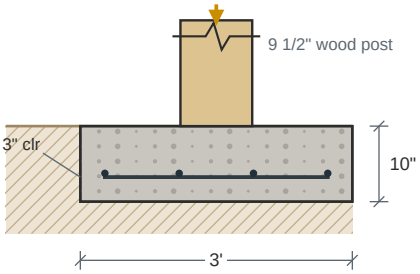

PLAN -- BOTTOM MAT

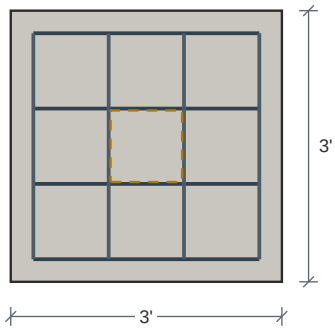

Bot.(4) #4 Long, (4) #4 Short

Carrying: Dead 1,128 lb Snow 8,015 lb

Design Results	Actual	Allowed	Result	Method	Load Combination
Soil Bearing Pressure (psf)	1,137	1,500	Passed (76% used)	ASD	D+S
One-Way Shear X (lbs)	2,757	18,486	Passed (15% used)	LRFD	1.2D+1.6S+L
One-Way Shear Y (lbs)	2,757	18,486	Passed (15% used)	LRFD	1.2D+1.6S+L
Two-Way Shear (lbs)	11,376	68,356	Passed (17% used)	LRFD	1.2D+1.6S+L
Moment X (ft-lbs)	4,006	21,559	Passed (19% used)	LRFD	1.2D+1.6S+L
Moment Y (ft-lbs)	4,006	21,559	Passed (19% used)	LRFD	1.2D+1.6S+L
Crushing (lbs)	14,177	299,179	Passed (5% used)	LRFD	1.2D+1.6S+L
Depth Above Bars (in)	6	7	Passed (89% used)	code	ACI 318-14 13.3.1.2

Footing Specification

as entered on the footing, and the mat the check selected

Geometry	
Shape	Square
Column type	Wood
Footing width	3'
Footing length	3'
Footing depth	10"
Column width	9 1/2"
Column length	9 1/2"
Pedestal height	4"
Pedestal width	4"
Pedestal length	4"

Footing Properties	
Steel yield strength	60,000 psi
Concrete strength	3,000 psi
Soil bearing pressure	1,500 psf
Concrete density	145 pcf
Top reinf. cover	3"
Bottom reinf. cover	3"
Side reinf. cover	3"
Aggregate diameter	3/4"

Soil Properties and Post	
Soil depth above footing	0
Soil density	140 pcf
Soil cohesion	0 psf
Friction angle	30°
Water level	0
Post	10x10 post
Post base	fabricated
Cap	(2) HL55, p. 315

Reinforcement	
Bottom mat	Bot.(4) #4 Long, (4) #4 Short
Bars the long way	(4) #4
Bars the short way	(4) #4
Selected for	moment and minimum steel
Plain concrete (no reinforcing)	No
Override rebar	No
Include water level	No
Allow bearing pressure increase	No

- Soil bearing is checked at service level (ASD) and includes the footing's own weight; shear, moment and crushing at strength level (LRFD), ACI 318-14, loads combined to ASCE 7-16.
- Reinforcement is selected for the moment and for minimum steel (ACI 318-14: 0.0018 Ag for Grade 60), at no more than 3h or 18 in.
- Wood post: check bearing on the post itself, its Fc-perp can govern below the concrete value.

Applied Loads	Location	Trib. Width	Dead (0.90)	Snow (1.15)	Comments
1 - Point (lb)	--	N/A	1,128	8,015	Linked from: Beam #5, Support 2

SpotFtg Bm #5-3

PASSED

Spot Footing 3' x 3' x 10" deep -- Bot.(4) #4 Long, (4) #4 Short

Level: Foundation | f'c 3,000 psi | rebar Fy 60 ksi | soil 1,500 psf | Wood column 9 1/2" x 9 1/2" | ACI 318-14

Controls: Depth Above Bars 89% used
Adequacy 24.2% (capacity to spare)

WHAT LOADS IT

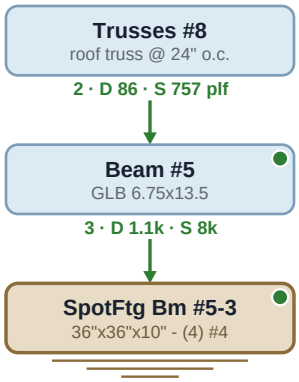

SECTION

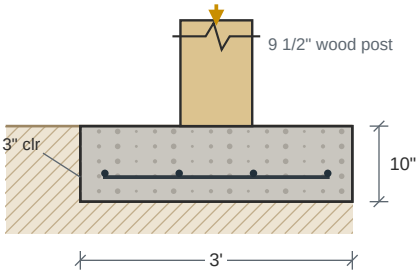

PLAN -- BOTTOM MAT

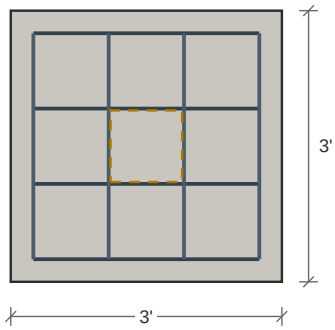

Bot.(4) #4 Long, (4) #4 Short

Carrying: Dead 1,128 lb Snow 8,015 lb

Design Results	Actual	Allowed	Result	Method	Load Combination
Soil Bearing Pressure (psf)	1,137	1,500	Passed (76% used)	ASD	D+S
One-Way Shear X (lbs)	2,757	18,486	Passed (15% used)	LRFD	1.2D+1.6S+L
One-Way Shear Y (lbs)	2,757	18,486	Passed (15% used)	LRFD	1.2D+1.6S+L
Two-Way Shear (lbs)	11,376	68,356	Passed (17% used)	LRFD	1.2D+1.6S+L
Moment X (ft-lbs)	4,006	21,559	Passed (19% used)	LRFD	1.2D+1.6S+L
Moment Y (ft-lbs)	4,006	21,559	Passed (19% used)	LRFD	1.2D+1.6S+L
Crushing (lbs)	14,177	299,179	Passed (5% used)	LRFD	1.2D+1.6S+L
Depth Above Bars (in)	6	7	Passed (89% used)	code	ACI 318-14 13.3.1.2

Footing Specification

as entered on the footing, and the mat the check selected

Geometry	
Shape	Square
Column type	Wood
Footing width	3'
Footing length	3'
Footing depth	10"
Column width	9 1/2"
Column length	9 1/2"
Pedestal height	4"
Pedestal width	4"
Pedestal length	4"

Footing Properties	
Steel yield strength	60,000 psi
Concrete strength	3,000 psi
Soil bearing pressure	1,500 psf
Concrete density	145 pcf
Top reinf. cover	3"
Bottom reinf. cover	3"
Side reinf. cover	3"
Aggregate diameter	3/4"

Soil Properties and Post	
Soil depth above footing	0
Soil density	140 pcf
Soil cohesion	0 psf
Friction angle	30°
Water level	0
Post	10x10 post
Post base	fabricated
Cap	(2) HL55, p. 315

Reinforcement	
Bottom mat	Bot.(4) #4 Long, (4) #4 Short
Bars the long way	(4) #4
Bars the short way	(4) #4
Selected for	moment and minimum steel
Plain concrete (no reinforcing)	No
Override rebar	No
Include water level	No
Allow bearing pressure increase	No

- Soil bearing is checked at service level (ASD) and includes the footing's own weight; shear, moment and crushing at strength level (LRFD), ACI 318-14, loads combined to ASCE 7-16.
- Reinforcement is selected for the moment and for minimum steel (ACI 318-14: 0.0018 Ag for Grade 60), at no more than 3h or 18 in.
- Wood post: check bearing on the post itself, its Fc-perp can govern below the concrete value.

Applied Loads	Location	Trib. Width	Dead (0.90)	Snow (1.15)	Comments
1 - Point (lb)	--	N/A	1,128	8,015	Linked from: Beam #5, Support 3

SpotFtg Bm #5-4

PASSED

Spot Footing 1' 4" x 1' 4" x 10" deep -- Bot.(2) #4 Long, (2) #4 Short

Level: Foundation | f'c 3,000 psi | rebar Fy 60 ksi | soil 1,500 psf | Wood column 9 1/2" x 9 1/2" | ACI 318-14

Controls: Depth Above Bars 89% used
Adequacy 62.2% (capacity to spare)

WHAT LOADS IT

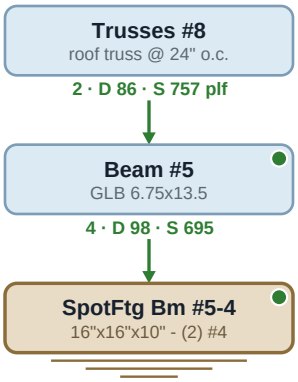

SECTION

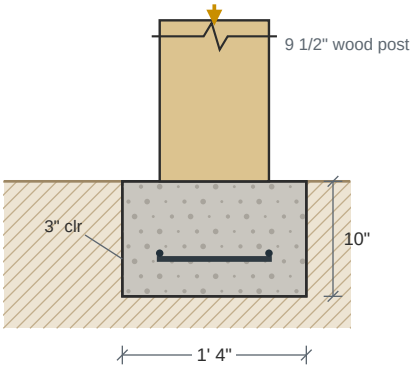

PLAN -- BOTTOM MAT

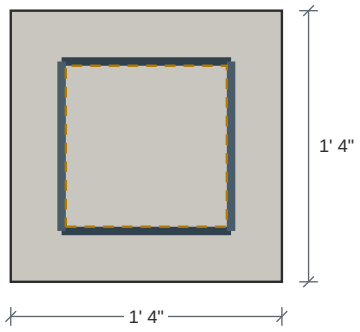

Bot.(2) #4 Long, (2) #4 Short

Carrying: Dead 98 lb Snow 695 lb

Design Results	Actual	Allowed	Result	Method	Load Combination
Soil Bearing Pressure (psf)	567	1,500	Passed (38% used)	ASD	D+S
One-Way Shear X (lbs)	0	8,216	Passed (0% used)	LRFD	1.2D+1.6S+L
One-Way Shear Y (lbs)	0	8,216	Passed (0% used)	LRFD	1.2D+1.6S+L
Moment X (ft-lbs)	101	10,721	Passed (1% used)	LRFD	1.2D+1.6S+L
Moment Y (ft-lbs)	101	10,721	Passed (1% used)	LRFD	1.2D+1.6S+L
Crushing (lbs)	1,230	251,940	Passed (0% used)	LRFD	1.2D+1.6S+L
Depth Above Bars (in)	6	7	Passed (89% used)	code	ACI 318-14 13.3.1.2

Footing Specification

as entered on the footing, and the mat the check selected

Geometry	
Shape	Square
Column type	Wood
Footing width	1' 4"
Footing length	1' 4"
Footing depth	10"
Column width	9 1/2"
Column length	9 1/2"
Pedestal height	4"
Pedestal width	4"
Pedestal length	4"

Footing Properties	
Steel yield strength	60,000 psi
Concrete strength	3,000 psi
Soil bearing pressure	1,500 psf
Concrete density	145 pcf
Top reinf. cover	3"
Bottom reinf. cover	3"
Side reinf. cover	3"
Aggregate diameter	3/4"

Soil Properties and Post	
Soil depth above footing	0
Soil density	140 pcf
Soil cohesion	0 psf
Friction angle	30°
Water level	0
Post	10x10 post
Post base	fabricated
Cap	(1) HL55, p. 315

Reinforcement	
Bottom mat	Bot.(2) #4 Long, (2) #4 Short
Bars the long way	(2) #4
Bars the short way	(2) #4
Selected for	moment and minimum steel
Plain concrete (no reinforcing)	No
Override rebar	No
Include water level	No
Allow bearing pressure increase	No

- Soil bearing is checked at service level (ASD) and includes the footing's own weight; shear, moment and crushing at strength level (LRFD), ACI 318-14, loads combined to ASCE 7-16.
- Reinforcement is selected for the moment and for minimum steel (ACI 318-14: 0.0018 Ag for Grade 60), at no more than 3h or 18 in.
- Wood post: check bearing on the post itself, its Fc-perp can govern below the concrete value.

Applied Loads	Location	Trib. Width	Dead (0.90)	Snow (1.15)	Comments
1 - Point (lb)	--	N/A	97.8	695.2	Linked from: Beam #5, Support 4

SpotFtg Bm #6-1

Spot Footing 3' x 3' x 10" deep -- Bot.(4) #4 Long, (4) #4 Short

Level: Foundation | f'c 3,000 psi | rebar Fy 60 ksi | soil 1,500 psf | Wood column 5 1/2" x 9 1/2" | ACI 318-14

PASSED

Controls: Depth Above Bars 89% used
Adequacy 15% (capacity to spare)

WHAT LOADS IT

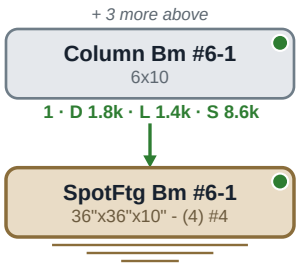

SECTION

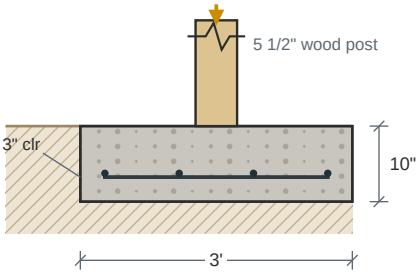

PLAN -- BOTTOM MAT

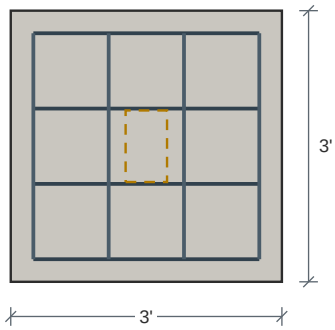

Bot.(4) #4 Long, (4) #4 Short

Carrying: Dead 1,841 lb Floor Live 1,421 lb Snow 8,552 lb

Design Results	Actual	Allowed	Result	Method	Load Combination
Soil Bearing Pressure (psf)	1,276	1,500	Passed (85% used)	ASD	D+S
One-Way Shear X (lbs)	3,366	18,486	Passed (18% used)	LRFD	1.2D+1.6S+L
One-Way Shear Y (lbs)	4,328	18,486	Passed (23% used)	LRFD	1.2D+1.6S+L
Two-Way Shear (lbs)	14,748	59,811	Passed (25% used)	LRFD	1.2D+1.6S+L
Moment X (ft-lbs)	4,892	21,559	Passed (23% used)	LRFD	1.2D+1.6S+L
Moment Y (ft-lbs)	5,538	21,559	Passed (26% used)	LRFD	1.2D+1.6S+L
Crushing (lbs)	17,313	173,209	Passed (10% used)	LRFD	1.2D+1.6S+L
Depth Above Bars (in)	6	7	Passed (89% used)	code	ACI 318-14 13.3.1.2

Footing Specification

as entered on the footing, and the mat the check selected

Geometry	
Shape	Square
Column type	Wood
Footing width	3'
Footing length	3'
Footing depth	10"
Column width	5 1/2"
Column length	9 1/2"
Pedestal height	4"
Pedestal width	4"
Pedestal length	4"

Footing Properties	
Steel yield strength	60,000 psi
Concrete strength	3,000 psi
Soil bearing pressure	1,500 psf
Concrete density	145 pcf
Top reinf. cover	3"
Bottom reinf. cover	3"
Side reinf. cover	3"
Aggregate diameter	3/4"

Soil Properties	
Soil depth above footing	0
Soil density	140 pcf
Soil cohesion	0 psf
Friction angle	30°
Water level	0

Reinforcement	
Bottom mat	Bot.(4) #4 Long, (4) #4 Short
Bars the long way	(4) #4
Bars the short way	(4) #4
Selected for	moment and minimum steel
Plain concrete (no reinforcing)	No
Override rebar	No
Include water level	No
Allow bearing pressure increase	No

- Soil bearing is checked at service level (ASD) and includes the footing's own weight; shear, moment and crushing at strength level (LRFD), ACI 318-14, loads combined to ASCE 7-16.
- Reinforcement is selected for the moment and for minimum steel (ACI 318-14: 0.0018 Ag for Grade 60), at no more than 3h or 18 in.
- Wood post: check bearing on the post itself, its Fc-perp can govern below the concrete value.

Applied Loads	Location	Trib. Width	Dead (0.90)	Floor Live (1.00)	Snow (1.15)	Comments
1 - Point (lb)	--	N/A	1,841	1,421	8,552	Linked from: Column Bm #6-1, Support 1

SpotFtg Bm #6-2

Spot Footing 3' x 3' x 10" deep -- Bot.(4) #4 Long, (4) #4 Short

Level: Foundation | f'c 3,000 psi | rebar Fy 60 ksi | soil 1,500 psf | Wood column 5 1/2" x 7 1/2" | ACI 318-14

PASSED

Controls: Depth Above Bars 89% used
Adequacy 22.9% (capacity to spare)

WHAT LOADS IT

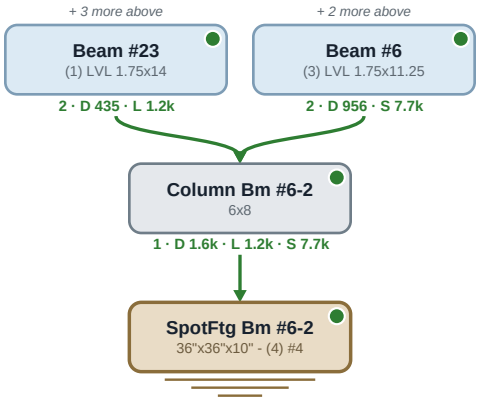

SECTION

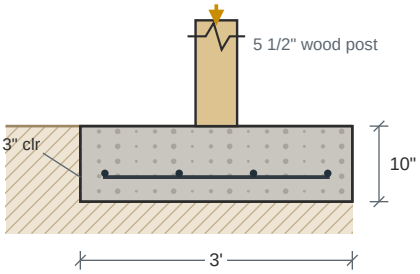

PLAN -- BOTTOM MAT

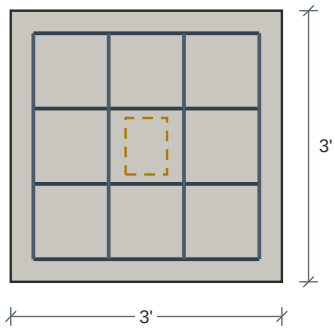

Bot.(4) #4 Long, (4) #4 Short

Carrying: Dead 1,577 lb Floor Live 1,208 lb Snow 7,748 lb

Design Results	Actual	Allowed	Result	Method	Load Combination
Soil Bearing Pressure (psf)	1,157	1,500	Passed (77% used)	ASD	D+S
One-Way Shear X (lbs)	3,444	18,486	Passed (19% used)	LRFD	1.2D+1.6S+L
One-Way Shear Y (lbs)	3,874	18,486	Passed (21% used)	LRFD	1.2D+1.6S+L
Two-Way Shear (lbs)	13,488	55,539	Passed (24% used)	LRFD	1.2D+1.6S+L
Moment X (ft-lbs)	4,664	21,559	Passed (22% used)	LRFD	1.2D+1.6S+L
Moment Y (ft-lbs)	4,958	21,559	Passed (23% used)	LRFD	1.2D+1.6S+L
Crushing (lbs)	15,497	136,744	Passed (11% used)	LRFD	1.2D+1.6S+L
Depth Above Bars (in)	6	7	Passed (89% used)	code	ACI 318-14 13.3.1.2

Footing Specification

as entered on the footing, and the mat the check selected

Geometry	
Shape	Square
Column type	Wood
Footing width	3'
Footing length	3'
Footing depth	10"
Column width	5 1/2"
Column length	7 1/2"
Pedestal height	4"
Pedestal width	4"
Pedestal length	4"

Footing Properties	
Steel yield strength	60,000 psi
Concrete strength	3,000 psi
Soil bearing pressure	1,500 psf
Concrete density	145 pcf
Top reinf. cover	3"
Bottom reinf. cover	3"
Side reinf. cover	3"
Aggregate diameter	3/4"

Soil Properties	
Soil depth above footing	0
Soil density	140 pcf
Soil cohesion	0 psf
Friction angle	30°
Water level	0

Reinforcement	
Bottom mat	Bot.(4) #4 Long, (4) #4 Short
Bars the long way	(4) #4
Bars the short way	(4) #4
Selected for	moment and minimum steel
Plain concrete (no reinforcing)	No
Override rebar	No
Include water level	No
Allow bearing pressure increase	No

- Soil bearing is checked at service level (ASD) and includes the footing's own weight; shear, moment and crushing at strength level (LRFD), ACI 318-14, loads combined to ASCE 7-16.
- Reinforcement is selected for the moment and for minimum steel (ACI 318-14: 0.0018 Ag for Grade 60), at no more than 3h or 18 in.
- Wood post: check bearing on the post itself, its Fc-perp can govern below the concrete value.

Applied Loads	Location	Trib. Width	Dead (0.90)	Floor Live (1.00)	Snow (1.15)	Comments
1 - Point (lb)	--	N/A	1,577	1,208	7,748	Linked from: Column Bm #6-2, Support 1

SpotFtg Bm #9-1

Spot Footing 3' x 3' x 10" deep -- Bot.(4) #4 Long, (4) #4 Short

Level: Foundation | f'c 3,000 psi | rebar Fy 60 ksi | soil 1,500 psf | Concrete column 8" x 8" | ACI 318-14

PASSED

Controls: Soil Bearing Pressure 91% used

Adequacy 9.4% (capacity to spare)

WHAT LOADS IT

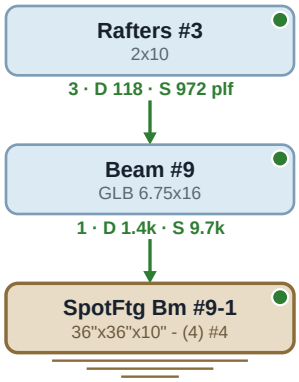

SECTION

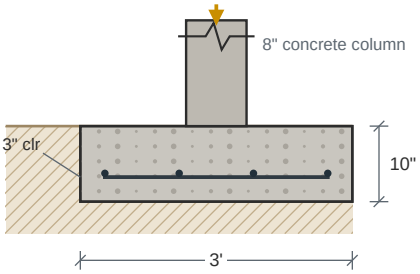

PLAN -- BOTTOM MAT

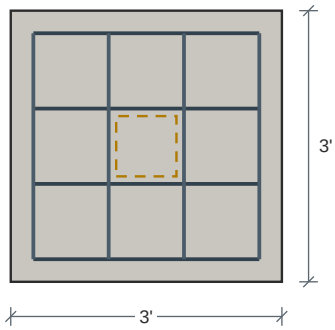

Bot.(4) #4 Long, (4) #4 Short

Carrying: Dead 1,426 lb Snow 9,717 lb

Design Results	Actual	Allowed	Result	Method	Load Combination
Soil Bearing Pressure (psf)	1,359	1,500	Passed (91% used)	ASD	D+S
One-Way Shear X (lbs)	3,715	18,486	Passed (20% used)	LRFD	1.2D+1.6S+L
One-Way Shear Y (lbs)	3,715	18,486	Passed (20% used)	LRFD	1.2D+1.6S+L
Two-Way Shear (lbs)	14,459	61,947	Passed (23% used)	LRFD	1.2D+1.6S+L
Moment X (ft-lbs)	3,915	21,559	Passed (18% used)	LRFD	1.2D+1.6S+L
Moment Y (ft-lbs)	3,915	21,559	Passed (18% used)	LRFD	1.2D+1.6S+L
Crushing (lbs)	17,258	212,160	Passed (8% used)	LRFD	1.2D+1.6S+L
Depth Above Bars (in)	6	7	Passed (89% used)	code	ACI 318-14 13.3.1.2

Footing Specification

as entered on the footing, and the mat the check selected

Geometry	
Shape	Square
Column type	Concrete
Footing width	3'
Footing length	3'
Footing depth	10"
Column width	8"
Column length	8"
Pedestal height	4"
Pedestal width	4"
Pedestal length	4"

Footing Properties	
Steel yield strength	60,000 psi
Concrete strength	3,000 psi
Soil bearing pressure	1,500 psf
Concrete density	145 pcf
Top reinf. cover	3"
Bottom reinf. cover	3"
Side reinf. cover	3"
Aggregate diameter	3/4"

Soil Properties	
Soil depth above footing	0
Soil density	140 pcf
Soil cohesion	0 psf
Friction angle	30°
Water level	0

Reinforcement	
Bottom mat	Bot.(4) #4 Long, (4) #4 Short
Bars the long way	(4) #4
Bars the short way	(4) #4
Selected for	moment and minimum steel
Plain concrete (no reinforcing)	No
Override rebar	No
Include water level	No
Allow bearing pressure increase	No

- Soil bearing is checked at service level (ASD) and includes the footing's own weight; shear, moment and crushing at strength level (LRFD), ACI 318-14, loads combined to ASCE 7-16.
- Reinforcement is selected for the moment and for minimum steel (ACI 318-14: 0.0018 Ag for Grade 60), at no more than 3h or 18 in.

Applied Loads	Location	Trib. Width	Dead (0.90)	Snow (1.15)	Comments
1 - Point (lb)	--	N/A	1,426	9,717	Linked from: Beam #9, Support 1

SpotFtg Bm #9-2

Spot Footing 4' 6" x 4' 6" x 10" deep -- Bot.(5) #4 Long, (5) #4 Short

Level: Foundation | f'c 3,000 psi | rebar Fy 60 ksi | soil 1,500 psf | Wood column 9 1/2" x 9 1/2" | ACI 318-14

PASSED

Controls: Depth Above Bars 89% used
Adequacy 18.6% (capacity to spare)

WHAT LOADS IT

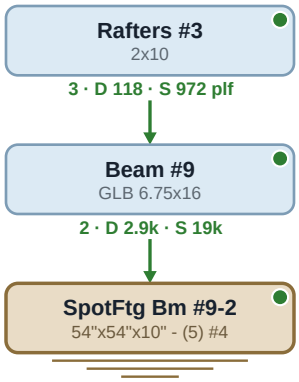

SECTION

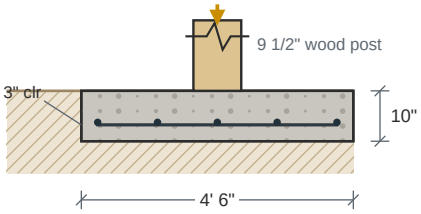

PLAN -- BOTTOM MAT

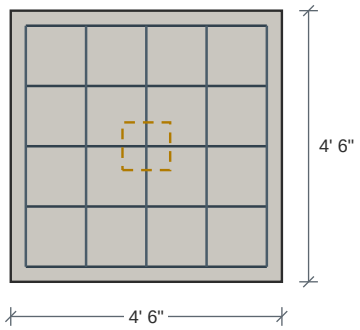

Bot.(5) #4 Long, (5) #4 Short

Carrying: Dead 2,852 lb Snow 19,434 lb

Design Results	Actual	Allowed	Result	Method	Load Combination
Soil Bearing Pressure (psf)	1,221	1,500	Passed (81% used)	ASD	D+S
One-Way Shear X (lbs)	10,227	27,728	Passed (37% used)	LRFD	1.2D+1.6S+L
One-Way Shear Y (lbs)	10,227	27,728	Passed (37% used)	LRFD	1.2D+1.6S+L
Two-Way Shear (lbs)	31,486	68,356	Passed (46% used)	LRFD	1.2D+1.6S+L
Moment X (ft-lbs)	16,150	27,145	Passed (59% used)	LRFD	1.2D+1.6S+L
Moment Y (ft-lbs)	16,150	27,145	Passed (59% used)	LRFD	1.2D+1.6S+L
Crushing (lbs)	34,517	299,179	Passed (12% used)	LRFD	1.2D+1.6S+L
Depth Above Bars (in)	6	7	Passed (89% used)	code	ACI 318-14 13.3.1.2

Footing Specification

as entered on the footing, and the mat the check selected

Geometry	
Shape	Square
Column type	Wood
Footing width	4' 6"
Footing length	4' 6"
Footing depth	10"
Column width	9 1/2"
Column length	9 1/2"
Pedestal height	4"
Pedestal width	4"
Pedestal length	4"

Footing Properties	
Steel yield strength	60,000 psi
Concrete strength	3,000 psi
Soil bearing pressure	1,500 psf
Concrete density	145 pcf
Top reinf. cover	3"
Bottom reinf. cover	3"
Side reinf. cover	3"
Aggregate diameter	3/4"

Soil Properties and Post	
Soil depth above footing	0
Soil density	140 pcf
Soil cohesion	0 psf
Friction angle	30°
Water level	0
Post	10x10 post
Post base	fabricated
Cap	(2) HL55, p. 315

Reinforcement	
Bottom mat	Bot.(5) #4 Long, (5) #4 Short
Bars the long way	(5) #4
Bars the short way	(5) #4
Selected for	moment and minimum steel
Plain concrete (no reinforcing)	No
Override rebar	No
Include water level	No
Allow bearing pressure increase	No

- Soil bearing is checked at service level (ASD) and includes the footing's own weight; shear, moment and crushing at strength level (LRFD), ACI 318-14, loads combined to ASCE 7-16.
- Reinforcement is selected for the moment and for minimum steel (ACI 318-14: 0.0018 Ag for Grade 60), at no more than 3h or 18 in.
- Wood post: check bearing on the post itself, its Fc-perp can govern below the concrete value.

Applied Loads	Location	Trib. Width	Dead (0.90)	Snow (1.15)	Comments
1 - Point (lb)	--	N/A	2,852	19,434	Linked from: Beam #9, Support 2

SpotFtg Bm #10-1

Spot Footing 3' 6" x 3' 6" x 10" deep -- Bot.(4) #4 Long, (4) #4 Short

Level: Foundation | f'c 3,000 psi | rebar Fy 60 ksi | soil 1,500 psf | Concrete column 8" x 8" | ACI 318-14

PASSED

Controls: Soil Bearing Pressure 93% used
Adequacy 6.6% (capacity to spare)

WHAT LOADS IT

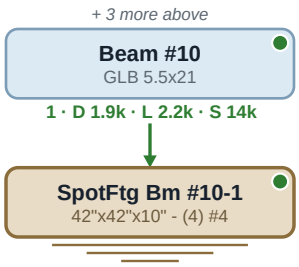

SECTION

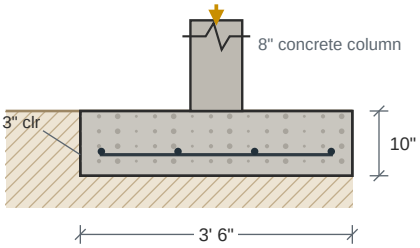

PLAN -- BOTTOM MAT

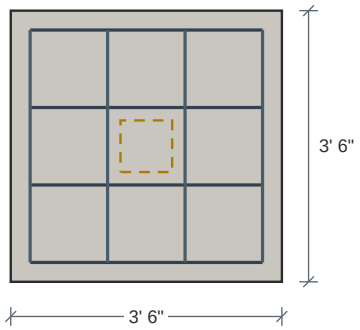

Bot.(4) #4 Long, (4) #4 Short

Carrying: Dead 1,856 lb Floor Live 2,156 lb Snow 13,818 lb

Design Results	Actual	Allowed	Result	Method	Load Combination
Soil Bearing Pressure (psf)	1,400	1,500	Passed (93% used)	ASD	D+S
One-Way Shear X (lbs)	6,781	21,567	Passed (31% used)	LRFD	1.2D+1.6S+L
One-Way Shear Y (lbs)	6,781	21,567	Passed (31% used)	LRFD	1.2D+1.6S+L
Two-Way Shear (lbs)	23,335	61,947	Passed (38% used)	LRFD	1.2D+1.6S+L
Moment X (ft-lbs)	7,596	21,693	Passed (35% used)	LRFD	1.2D+1.6S+L
Moment Y (ft-lbs)	7,596	21,693	Passed (35% used)	LRFD	1.2D+1.6S+L
Crushing (lbs)	26,492	212,160	Passed (12% used)	LRFD	1.2D+1.6S+L
Depth Above Bars (in)	6	7	Passed (89% used)	code	ACI 318-14 13.3.1.2

Footing Specification

as entered on the footing, and the mat the check selected

Geometry	
Shape	Square
Column type	Concrete
Footing width	3' 6"
Footing length	3' 6"
Footing depth	10"
Column width	8"
Column length	8"
Pedestal height	4"
Pedestal width	4"
Pedestal length	4"

Footing Properties	
Steel yield strength	60,000 psi
Concrete strength	3,000 psi
Soil bearing pressure	1,500 psf
Concrete density	145 pcf
Top reinf. cover	3"
Bottom reinf. cover	3"
Side reinf. cover	3"
Aggregate diameter	3/4"

Soil Properties	
Soil depth above footing	0
Soil density	140 pcf
Soil cohesion	0 psf
Friction angle	30°
Water level	0

Reinforcement	
Bottom mat	Bot.(4) #4 Long, (4) #4 Short
Bars the long way	(4) #4
Bars the short way	(4) #4
Selected for	moment and minimum steel
Plain concrete (no reinforcing)	No
Override rebar	No
Include water level	No
Allow bearing pressure increase	No

- Soil bearing is checked at service level (ASD) and includes the footing's own weight; shear, moment and crushing at strength level (LRFD), ACI 318-14, loads combined to ASCE 7-16.
- Reinforcement is selected for the moment and for minimum steel (ACI 318-14: 0.0018 Ag for Grade 60), at no more than 3h or 18 in.

Applied Loads	Location	Trib. Width	Dead (0.90)	Floor Live (1.00)	Snow (1.15)	Comments
1 - Point (lb)	--	N/A	1,856	2,156	13,818	Linked from: Beam #10, Support 1

SpotFtg Bm #10-2

PASSED

Spot Footing 4' 6" x 4' 6" x 10" deep -- Bot.(5) #4 Long, (5) #4 Short

Level: Foundation | f'c 3,000 psi | rebar Fy 60 ksi | soil 1,500 psf | Concrete column 8" x 18" | ACI 318-14

Controls: Depth Above Bars 89% used
Adequacy 15.1% (capacity to spare)

WHAT LOADS IT

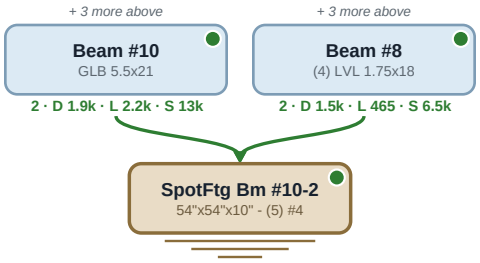

SECTION

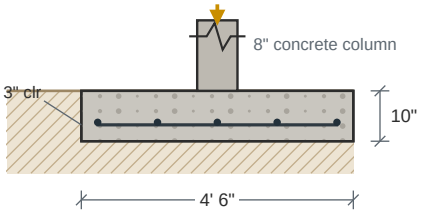

PLAN -- BOTTOM MAT

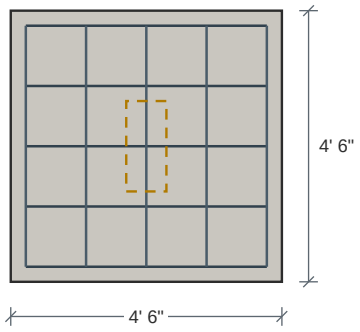

Bot.(5) #4 Long, (5) #4 Short

Carrying: Dead 3,371 lb Floor Live 2,622 lb Snow 19,964 lb

Design Results	Actual	Allowed	Result	Method	Load Combination
Soil Bearing Pressure (psf)	1,273	1,500	Passed (85% used)	ASD	D+S
One-Way Shear X (lbs)	8,401	27,728	Passed (30% used)	LRFD	1.2D+1.6S+L
One-Way Shear Y (lbs)	11,976	27,728	Passed (43% used)	LRFD	1.2D+1.6S+L
Two-Way Shear (lbs)	33,906	78,680	Passed (43% used)	LRFD	1.2D+1.6S+L
Moment X (ft-lbs)	9,652	27,145	Passed (36% used)	LRFD	1.2D+1.6S+L
Moment Y (ft-lbs)	15,760	27,145	Passed (58% used)	LRFD	1.2D+1.6S+L
Crushing (lbs)	38,609	477,360	Passed (8% used)	LRFD	1.2D+1.6S+L
Depth Above Bars (in)	6	7	Passed (89% used)	code	ACI 318-14 13.3.1.2

Footing Specification

as entered on the footing, and the mat the check selected

Geometry	
Shape	Square
Column type	Concrete
Footing width	4' 6"
Footing length	4' 6"
Footing depth	10"
Column width	8"
Column length	18"
Pedestal height	4"
Pedestal width	4"
Pedestal length	4"

Footing Properties	
Steel yield strength	60,000 psi
Concrete strength	3,000 psi
Soil bearing pressure	1,500 psf
Concrete density	145 pcf
Top reinf. cover	3"
Bottom reinf. cover	3"
Side reinf. cover	3"
Aggregate diameter	3/4"

Soil Properties	
Soil depth above footing	0
Soil density	140 pcf
Soil cohesion	0 psf
Friction angle	30°
Water level	0

Reinforcement	
Bottom mat	Bot.(5) #4 Long, (5) #4 Short
Bars the long way	(5) #4
Bars the short way	(5) #4
Selected for	moment and minimum steel
Plain concrete (no reinforcing)	No
Override rebar	No
Include water level	No
Allow bearing pressure increase	No

- Soil bearing is checked at service level (ASD) and includes the footing's own weight; shear, moment and crushing at strength level (LRFD), ACI 318-14, loads combined to ASCE 7-16.
- Reinforcement is selected for the moment and for minimum steel (ACI 318-14: 0.0018 Ag for Grade 60), at no more than 3h or 18 in.

Applied Loads	Location	Trib. Width	Dead (0.90)	Floor Live (1.00)	Snow (1.15)	Comments
1 - Point (lb)	--	N/A	1,910	2,156	13,459	Linked from: Beam #10, Support 2
2 - Point (lb)	--	N/A	1,461	465.4	6,505	Linked from: Beam #8, Support 2

SpotFtg Bm #11-1

Spot Footing 2' x 2' x 10" deep -- Unreinforced (Plain)

Level: Foundation | f'c 3,000 psi | rebar Fy 60 ksi | soil 1,500 psf | Concrete column 8" x 8" | ACI 318-14

PASSED

Controls: Minimum Thickness 80% used
Adequacy 31% (capacity to spare)

WHAT LOADS IT

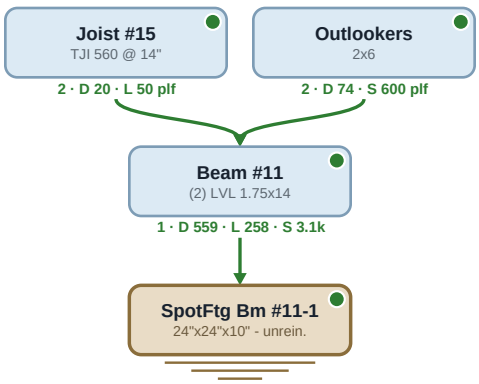

SECTION

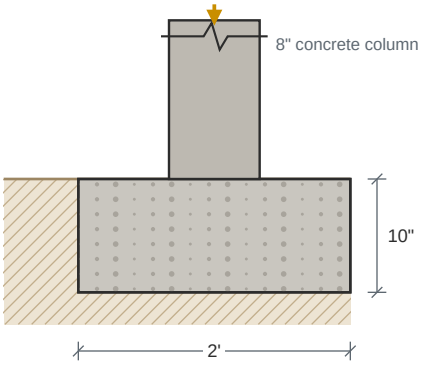

PLAN -- PLAIN CONCRETE, NO REINFORCING

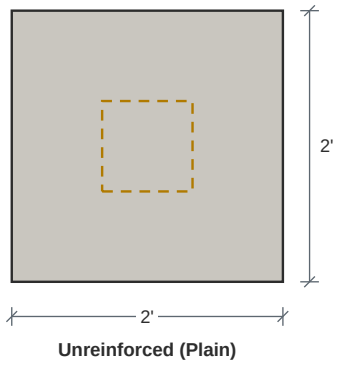

Unreinforced (Plain)

Carrying: Dead 559 lb Snow 3,100 lb Floor Live 258 lb

Design Results	Actual	Allowed	Result	Method	Load Combination
Soil Bearing Pressure (psf)	1,036	1,500	Passed (69% used)	ASD	D+S
Two-Way Shear (lbs)	3,272	44,757	Passed (7% used)	LRFD	1.2D+1.6S+L
Moment X (ft-lbs)	654	3,505	Passed (19% used)	LRFD	1.2D+1.6S+L
Moment Y (ft-lbs)	654	3,505	Passed (19% used)	LRFD	1.2D+1.6S+L
Crushing (lbs)	5,889	195,840	Passed (3% used)	LRFD	1.2D+1.6S+L
Minimum Thickness (in)	8	10	Passed (80% used)	code	ACI 318-14 Ch. 14

Footing Specification

as entered on the footing, and the mat the check selected

Geometry	
Shape	Square
Column type	Concrete
Footing width	2'
Footing length	2'
Footing depth	10"
Column width	8"
Column length	8"
Pedestal height	4"
Pedestal width	4"
Pedestal length	4"

Footing Properties	
Steel yield strength	60,000 psi
Concrete strength	3,000 psi
Soil bearing pressure	1,500 psf
Concrete density	145 pcf
Top reinf. cover	3"
Bottom reinf. cover	3"
Side reinf. cover	3"
Aggregate diameter	3/4"

Soil Properties	
Soil depth above footing	0
Soil density	140 pcf
Soil cohesion	0 psf
Friction angle	30°
Water level	0

Reinforcement	
Reinforcing	none -- plain concrete
Plain concrete (no reinforcing)	Yes
Override rebar	No
Include water level	No
Allow bearing pressure increase	No

- Soil bearing is checked at service level (ASD) and includes the footing's own weight; shear, moment and crushing at strength level (LRFD), ACI 318-14, loads combined to ASCE 7-16.
- Reinforcement is selected for the moment and for minimum steel (ACI 318-14: 0.0018 Ag for Grade 60), at no more than 3h or 18 in.

Applied Loads	Location	Trib. Width	Dead (0.90)	Floor Live (1.00)	Snow (1.15)	Comments
1 - Point (lb)	--	N/A	559	258.4	3,100	Linked from: Beam #11, Support 1

SpotFtg Bm #11-2

Spot Footing 3' x 1' 4" x 10" deep -- Unreinforced (Plain)

Level: Foundation | f'c 3,000 psi | rebar Fy 60 ksi | soil 1,500 psf | Concrete column 8" x 8" | ACI 318-14

PASSED

Controls: Minimum Thickness 80% used

Adequacy 31% (capacity to spare)

WHAT LOADS IT

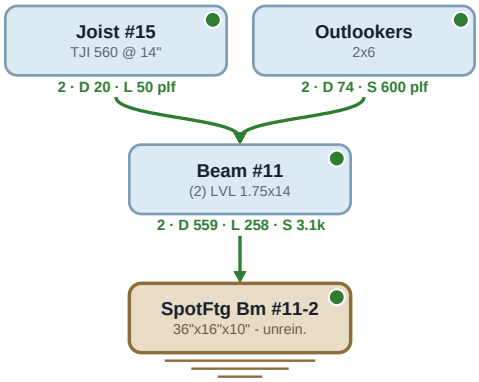

SECTION

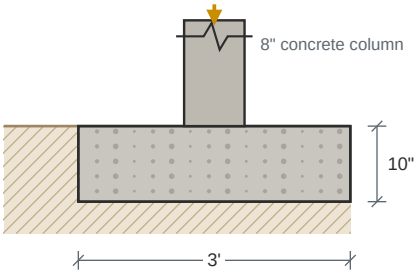

PLAN -- PLAIN CONCRETE, NO REINFORCING

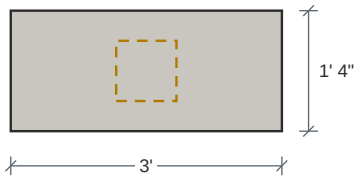

Unreinforced (Plain)

Carrying: Dead 559 lb Snow 3,100 lb Floor Live 258 lb

Design Results	Actual	Allowed	Result	Method	Load Combination
Soil Bearing Pressure (psf)	1,036	1,500	Passed (69% used)	ASD	D+S
One-Way Shear Y (lbs)	982	5,609	Passed (18% used)	LRFD	1.2D+1.6S+L
Moment X (ft-lbs)	245	5,258	Passed (5% used)	LRFD	1.2D+1.6S+L
Moment Y (ft-lbs)	1,336	2,337	Passed (57% used)	LRFD	1.2D+1.6S+L
Crushing (lbs)	5,889	195,840	Passed (3% used)	LRFD	1.2D+1.6S+L
Minimum Thickness (in)	8	10	Passed (80% used)	code	ACI 318-14 Ch. 14

Footing Specification

as entered on the footing, and the mat the check selected

Geometry	
Shape	Square
Column type	Concrete
Footing width	3'
Footing length	1' 4"
Footing depth	10"
Column width	8"
Column length	8"
Pedestal height	4"
Pedestal width	4"
Pedestal length	4"

Footing Properties	
Steel yield strength	60,000 psi
Concrete strength	3,000 psi
Soil bearing pressure	1,500 psf
Concrete density	145 pcf
Top reinf. cover	3"
Bottom reinf. cover	3"
Side reinf. cover	3"
Aggregate diameter	3/4"

Soil Properties	
Soil depth above footing	0
Soil density	140 pcf
Soil cohesion	0 psf
Friction angle	30°
Water level	0

Reinforcement	
Reinforcing	none -- plain concrete
Plain concrete (no reinforcing)	Yes
Override rebar	No
Include water level	No
Allow bearing pressure increase	No

- Soil bearing is checked at service level (ASD) and includes the footing's own weight; shear, moment and crushing at strength level (LRFD), ACI 318-14, loads combined to ASCE 7-16.
- Reinforcement is selected for the moment and for minimum steel (ACI 318-14: 0.0018 Ag for Grade 60), at no more than 3h or 18 in.

Applied Loads	Location	Trib. Width	Dead (0.90)	Floor Live (1.00)	Snow (1.15)	Comments
1 - Point (lb)	--	N/A	559	258.4	3,100	Linked from: Beam #11, Support 2

SpotFtg Bm #13-1

Spot Footing 4' 6" x 4' 6" x 10" deep -- Bot.(5) #4 Long, (5) #4 Short

Level: Foundation | f'c 3,000 psi | rebar Fy 60 ksi | soil 1,500 psf | Concrete column 8" x 8" | ACI 318-14

PASSED

Controls: Soil Bearing Pressure 92% used
Adequacy 7.7% (capacity to spare)

WHAT LOADS IT

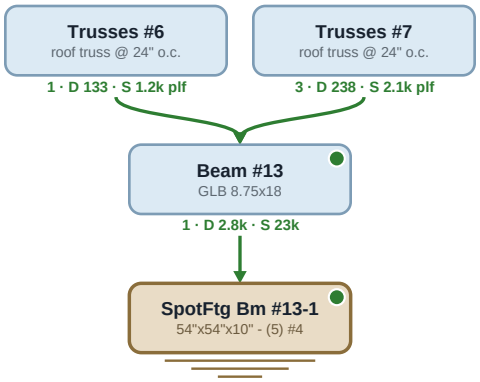

SECTION

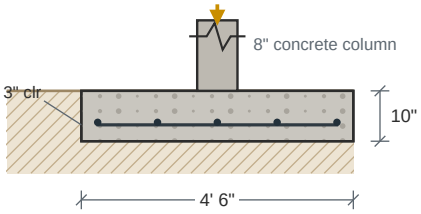

PLAN -- BOTTOM MAT

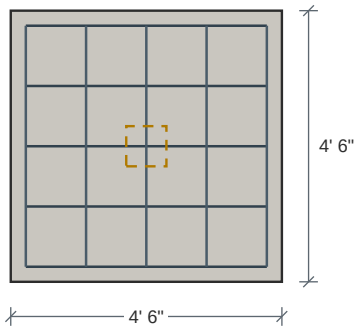

Bot.(5) #4 Long, (5) #4 Short

Carrying: Dead 2,829 lb Snow 22,759 lb

Design Results	Actual	Allowed	Result	Method	Load Combination
Soil Bearing Pressure (psf)	1,384	1,500	Passed (92% used)	ASD	D+S
One-Way Shear X (lbs)	12,348	27,728	Passed (45% used)	LRFD	1.2D+1.6S+L
One-Way Shear Y (lbs)	12,348	27,728	Passed (45% used)	LRFD	1.2D+1.6S+L
Two-Way Shear (lbs)	36,939	61,947	Passed (60% used)	LRFD	1.2D+1.6S+L
Moment X (ft-lbs)	16,249	27,145	Passed (60% used)	LRFD	1.2D+1.6S+L
Moment Y (ft-lbs)	16,249	27,145	Passed (60% used)	LRFD	1.2D+1.6S+L
Crushing (lbs)	39,810	212,160	Passed (19% used)	LRFD	1.2D+1.6S+L
Depth Above Bars (in)	6	7	Passed (89% used)	code	ACI 318-14 13.3.1.2

Footing Specification

as entered on the footing, and the mat the check selected

Geometry	
Shape	Square
Column type	Concrete
Footing width	4' 6"
Footing length	4' 6"
Footing depth	10"
Column width	8"
Column length	8"
Pedestal height	4"
Pedestal width	4"
Pedestal length	4"

Footing Properties	
Steel yield strength	60,000 psi
Concrete strength	3,000 psi
Soil bearing pressure	1,500 psf
Concrete density	145 pcf
Top reinf. cover	3"
Bottom reinf. cover	3"
Side reinf. cover	3"
Aggregate diameter	3/4"

Soil Properties	
Soil depth above footing	0
Soil density	140 pcf
Soil cohesion	0 psf
Friction angle	30°
Water level	0

Reinforcement	
Bottom mat	Bot.(5) #4 Long, (5) #4 Short
Bars the long way	(5) #4
Bars the short way	(5) #4
Selected for	moment and minimum steel
Plain concrete (no reinforcing)	No
Override rebar	No
Include water level	No
Allow bearing pressure increase	No

- Soil bearing is checked at service level (ASD) and includes the footing's own weight; shear, moment and crushing at strength level (LRFD), ACI 318-14, loads combined to ASCE 7-16.
- Reinforcement is selected for the moment and for minimum steel (ACI 318-14: 0.0018 Ag for Grade 60), at no more than 3h or 18 in.

Applied Loads	Location	Trib. Width	Dead (0.90)	Snow (1.15)	Comments
1 - Point (lb)	--	N/A	2,829	22,759	Linked from: Beam #13, Support 1

SpotFtg Bm #13-2

Spot Footing 5' x 5' x 10" deep -- Bot.(6) #4 Long, (6) #4 Short

Level: Foundation | f'c 3,000 psi | rebar Fy 60 ksi | soil 1,500 psf | Concrete column 8" x 8" | ACI 318-14

PASSED

Controls: Depth Above Bars 89% used
Adequacy 13% (capacity to spare)

WHAT LOADS IT

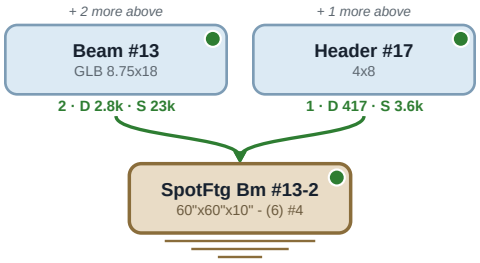

SECTION

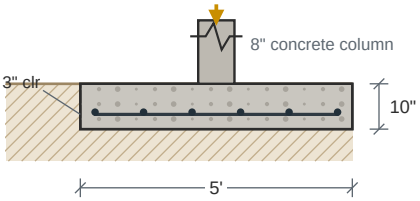

PLAN -- BOTTOM MAT

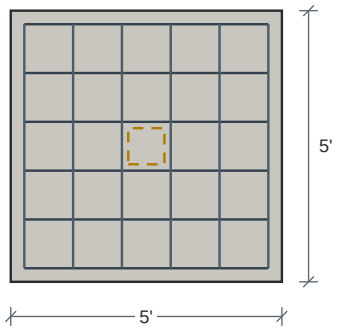

Bot.(6) #4 Long, (6) #4 Short

Carrying: Dead 3,246 lb Snow 26,345 lb

Design Results	Actual	Allowed	Result	Method	Load Combination
Soil Bearing Pressure (psf)	1,304	1,500	Passed (87% used)	ASD	D+S
One-Way Shear X (lbs)	15,157	30,809	Passed (49% used)	LRFD	1.2D+1.6S+L
One-Way Shear Y (lbs)	15,157	30,809	Passed (49% used)	LRFD	1.2D+1.6S+L
Two-Way Shear (lbs)	43,358	61,947	Passed (70% used)	LRFD	1.2D+1.6S+L
Moment X (ft-lbs)	21,617	32,479	Passed (67% used)	LRFD	1.2D+1.6S+L
Moment Y (ft-lbs)	21,617	32,479	Passed (67% used)	LRFD	1.2D+1.6S+L
Crushing (lbs)	46,048	212,160	Passed (22% used)	LRFD	1.2D+1.6S+L
Depth Above Bars (in)	6	7	Passed (89% used)	code	ACI 318-14 13.3.1.2

Footing Specification

as entered on the footing, and the mat the check selected

Geometry	
Shape	Square
Column type	Concrete
Footing width	5'
Footing length	5'
Footing depth	10"
Column width	8"
Column length	8"
Pedestal height	4"
Pedestal width	4"
Pedestal length	4"

Footing Properties	
Steel yield strength	60,000 psi
Concrete strength	3,000 psi
Soil bearing pressure	1,500 psf
Concrete density	145 pcf
Top reinf. cover	3"
Bottom reinf. cover	3"
Side reinf. cover	3"
Aggregate diameter	3/4"

Soil Properties	
Soil depth above footing	0
Soil density	140 pcf
Soil cohesion	0 psf
Friction angle	30°
Water level	0

Reinforcement	
Bottom mat	Bot.(6) #4 Long, (6) #4 Short
Bars the long way	(6) #4
Bars the short way	(6) #4
Selected for	moment and minimum steel
Plain concrete (no reinforcing)	No
Override rebar	No
Include water level	No
Allow bearing pressure increase	No

- Soil bearing is checked at service level (ASD) and includes the footing's own weight; shear, moment and crushing at strength level (LRFD), ACI 318-14, loads combined to ASCE 7-16.
- Reinforcement is selected for the moment and for minimum steel (ACI 318-14: 0.0018 Ag for Grade 60), at no more than 3h or 18 in.

Applied Loads	Location	Trib. Width	Dead (0.90)	Snow (1.15)	Comments
1 - Point (lb)	--	N/A	2,829	22,759	Linked from: Beam #13, Support 2
2 - Point (lb)	--	N/A	417.2	3,586	Linked from: Header #17, Support 1

SpotFtg Bm #15-1

Spot Footing 4' 6" x 4' 6" x 10" deep -- Bot.(5) #4 Long, (5) #4 Short

Level: Foundation | f'c 3,000 psi | rebar Fy 60 ksi | soil 1,500 psf | Concrete column 8" x 8" | ACI 318-14

PASSED

Controls: Depth Above Bars 89% used

Adequacy 16.5% (capacity to spare)

WHAT LOADS IT

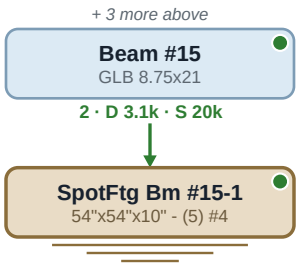

SECTION

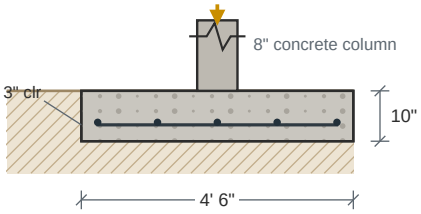

PLAN -- BOTTOM MAT

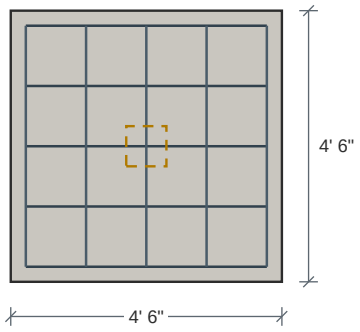

Bot.(5) #4 Long, (5) #4 Short

Carrying: Dead 3,077 lb Snow 19,832 lb

Design Results	Actual	Allowed	Result	Method	Load Combination
Soil Bearing Pressure (psf)	1,252	1,500	Passed (83% used)	ASD	D+S
One-Way Shear X (lbs)	10,988	27,728	Passed (40% used)	LRFD	1.2D+1.6S+L
One-Way Shear Y (lbs)	10,988	27,728	Passed (40% used)	LRFD	1.2D+1.6S+L
Two-Way Shear (lbs)	32,870	61,947	Passed (53% used)	LRFD	1.2D+1.6S+L
Moment X (ft-lbs)	14,459	27,145	Passed (53% used)	LRFD	1.2D+1.6S+L
Moment Y (ft-lbs)	14,459	27,145	Passed (53% used)	LRFD	1.2D+1.6S+L
Crushing (lbs)	35,424	212,160	Passed (17% used)	LRFD	1.2D+1.6S+L
Depth Above Bars (in)	6	7	Passed (89% used)	code	ACI 318-14 13.3.1.2

Footing Specification

as entered on the footing, and the mat the check selected

Geometry	
Shape	Square
Column type	Concrete
Footing width	4' 6"
Footing length	4' 6"
Footing depth	10"
Column width	8"
Column length	8"
Pedestal height	4"
Pedestal width	4"
Pedestal length	4"

Footing Properties	
Steel yield strength	60,000 psi
Concrete strength	3,000 psi
Soil bearing pressure	1,500 psf
Concrete density	145 pcf
Top reinf. cover	3"
Bottom reinf. cover	3"
Side reinf. cover	3"
Aggregate diameter	3/4"

Soil Properties	
Soil depth above footing	0
Soil density	140 pcf
Soil cohesion	0 psf
Friction angle	30°
Water level	0

Reinforcement	
Bottom mat	Bot.(5) #4 Long, (5) #4 Short
Bars the long way	(5) #4
Bars the short way	(5) #4
Selected for	moment and minimum steel
Plain concrete (no reinforcing)	No
Override rebar	No
Include water level	No
Allow bearing pressure increase	No

- Soil bearing is checked at service level (ASD) and includes the footing's own weight; shear, moment and crushing at strength level (LRFD), ACI 318-14, loads combined to ASCE 7-16.
- Reinforcement is selected for the moment and for minimum steel (ACI 318-14: 0.0018 Ag for Grade 60), at no more than 3h or 18 in.

Applied Loads	Location	Trib. Width	Dead (0.90)	Snow (1.15)	Comments
1 - Point (lb)	--	N/A	3,077	19,832	Linked from: Beam #15, Support 2

SpotFtg Bm #15-2

Spot Footing 3' 6" x 3' 6" x 10" deep -- Bot.(4) #4 Long, (4) #4 Short

Level: Foundation | f'c 3,000 psi | rebar Fy 60 ksi | soil 1,500 psf | Concrete column 8" x 8" | ACI 318-14

PASSED

Controls: Soil Bearing Pressure 91% used

Adequacy 9.2% (capacity to spare)

WHAT LOADS IT

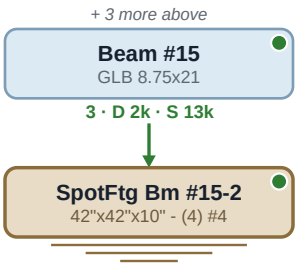

SECTION

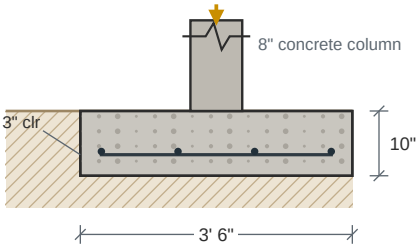

PLAN -- BOTTOM MAT

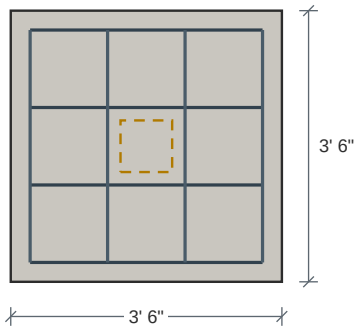

Bot.(4) #4 Long, (4) #4 Short

Carrying: Dead 1,992 lb Snow 13,220 lb

Design Results	Actual	Allowed	Result	Method	Load Combination
Soil Bearing Pressure (psf)	1,363	1,500	Passed (91% used)	ASD	D+S
One-Way Shear X (lbs)	6,026	21,567	Passed (28% used)	LRFD	1.2D+1.6S+L
One-Way Shear Y (lbs)	6,026	21,567	Passed (28% used)	LRFD	1.2D+1.6S+L
Two-Way Shear (lbs)	20,737	61,947	Passed (33% used)	LRFD	1.2D+1.6S+L
Moment X (ft-lbs)	6,750	21,693	Passed (31% used)	LRFD	1.2D+1.6S+L
Moment Y (ft-lbs)	6,750	21,693	Passed (31% used)	LRFD	1.2D+1.6S+L
Crushing (lbs)	23,543	212,160	Passed (11% used)	LRFD	1.2D+1.6S+L
Depth Above Bars (in)	6	7	Passed (89% used)	code	ACI 318-14 13.3.1.2

Footing Specification

as entered on the footing, and the mat the check selected

Geometry	
Shape	Square
Column type	Concrete
Footing width	3' 6"
Footing length	3' 6"
Footing depth	10"
Column width	8"
Column length	8"
Pedestal height	4"
Pedestal width	4"
Pedestal length	4"

Footing Properties	
Steel yield strength	60,000 psi
Concrete strength	3,000 psi
Soil bearing pressure	1,500 psf
Concrete density	145 pcf
Top reinf. cover	3"
Bottom reinf. cover	3"
Side reinf. cover	3"
Aggregate diameter	3/4"

Soil Properties	
Soil depth above footing	0
Soil density	140 pcf
Soil cohesion	0 psf
Friction angle	30°
Water level	0

Reinforcement	
Bottom mat	Bot.(4) #4 Long, (4) #4 Short
Bars the long way	(4) #4
Bars the short way	(4) #4
Selected for	moment and minimum steel
Plain concrete (no reinforcing)	No
Override rebar	No
Include water level	No
Allow bearing pressure increase	No

- Soil bearing is checked at service level (ASD) and includes the footing's own weight; shear, moment and crushing at strength level (LRFD), ACI 318-14, loads combined to ASCE 7-16.
- Reinforcement is selected for the moment and for minimum steel (ACI 318-14: 0.0018 Ag for Grade 60), at no more than 3h or 18 in.

Applied Loads	Location	Trib. Width	Dead (0.90)	Snow (1.15)	Comments
1 - Point (lb)	--	N/A	1,992	13,220	Linked from: Beam #15, Support 3

SpotFtg Bm #20-1

PASSED

Spot Footing 2' x 2' x 10" deep -- Bot.(3) #4 Long, (3) #4 Short

Level: Foundation | f'c 3,000 psi | rebar Fy 60 ksi | soil 1,500 psf | Concrete column 8" x 8" | ACI 318-14

Controls: Soil Bearing Pressure 94% used
Adequacy 6.5% (capacity to spare)

WHAT LOADS IT

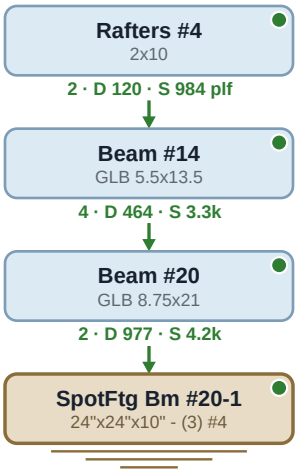

SECTION

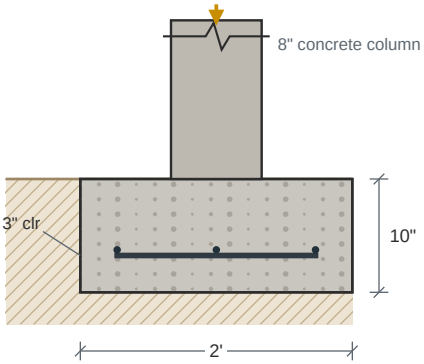

PLAN -- BOTTOM MAT

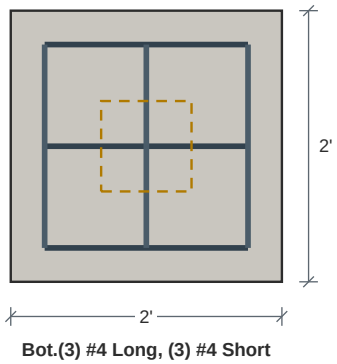

Bot.(3) #4 Long, (3) #4 Short

Carrying: Dead 977 lb Snow 4,150 lb

Design Results	Actual	Allowed	Result	Method	Load Combination
Soil Bearing Pressure (psf)	1,403	1,500	Passed (94% used)	ASD	D+S
One-Way Shear X (lbs)	570	12,324	Passed (5% used)	LRFD	1.2D+1.6S+L
One-Way Shear Y (lbs)	570	12,324	Passed (5% used)	LRFD	1.2D+1.6S+L
Two-Way Shear (lbs)	4,961	61,947	Passed (8% used)	LRFD	1.2D+1.6S+L
Moment X (ft-lbs)	868	16,081	Passed (5% used)	LRFD	1.2D+1.6S+L
Moment Y (ft-lbs)	868	16,081	Passed (5% used)	LRFD	1.2D+1.6S+L
Crushing (lbs)	7,813	212,160	Passed (4% used)	LRFD	1.2D+1.6S+L
Depth Above Bars (in)	6	7	Passed (89% used)	code	ACI 318-14 13.3.1.2

Footing Specification

as entered on the footing, and the mat the check selected

Geometry	
Shape	Square
Column type	Concrete
Footing width	2'
Footing length	2'
Footing depth	10"
Column width	8"
Column length	8"
Pedestal height	4"
Pedestal width	4"
Pedestal length	4"

Footing Properties	
Steel yield strength	60,000 psi
Concrete strength	3,000 psi
Soil bearing pressure	1,500 psf
Concrete density	145 pcf
Top reinf. cover	3"
Bottom reinf. cover	3"
Side reinf. cover	3"
Aggregate diameter	3/4"

Soil Properties	
Soil depth above footing	0
Soil density	140 pcf
Soil cohesion	0 psf
Friction angle	30°
Water level	0

Reinforcement	
Bottom mat	Bot.(3) #4 Long, (3) #4 Short
Bars the long way	(3) #4
Bars the short way	(3) #4
Selected for	moment and minimum steel
Plain concrete (no reinforcing)	No
Override rebar	No
Include water level	No
Allow bearing pressure increase	No

- Soil bearing is checked at service level (ASD) and includes the footing's own weight; shear, moment and crushing at strength level (LRFD), ACI 318-14, loads combined to ASCE 7-16.
- Reinforcement is selected for the moment and for minimum steel (ACI 318-14: 0.0018 Ag for Grade 60), at no more than 3h or 18 in.

SpotFtg Bm #20-1 (continued)

Spot Footing | 2' x 2' x 10" deep -- Bot.(3) #4 Long, (3) #4 Short

Applied Loads	Location	Trib. Width	Dead (0.90)	Snow (1.15)	Comments
1 - Point (lb)	--	N/A	977.5	4,150	Linked from: Beam #20, Support 2

SpotFtg Bm #21-1

PASSED

Spot Footing 2' x 2' x 10" deep -- Bot.(3) #4 Long, (3) #4 Short

Level: Foundation | f'c 3,000 psi | rebar Fy 60 ksi | soil 1,500 psf | Concrete column 8" x 8" | ACI 318-14

Controls: Depth Above Bars 89% used
Adequacy 28.3% (capacity to spare)

WHAT LOADS IT

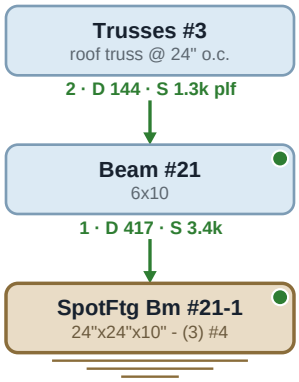

SECTION

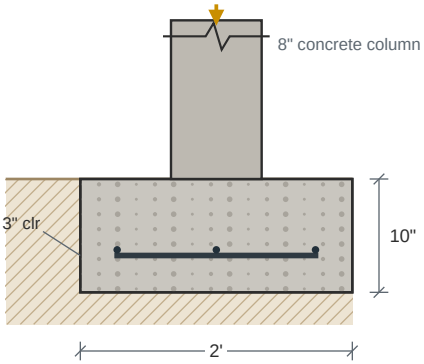

PLAN -- BOTTOM MAT

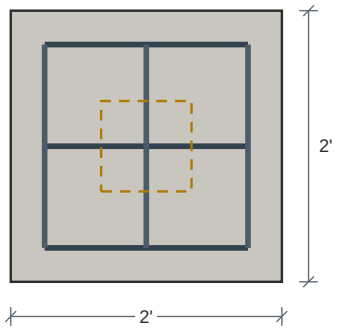

Bot.(3) #4 Long, (3) #4 Short

Carrying: Dead 417 lb Snow 3,400 lb

Design Results	Actual	Allowed	Result	Method	Load Combination
Soil Bearing Pressure (psf)	1,075	1,500	Passed (72% used)	ASD	D+S
One-Way Shear X (lbs)	433	12,324	Passed (4% used)	LRFD	1.2D+1.6S+L
One-Way Shear Y (lbs)	433	12,324	Passed (4% used)	LRFD	1.2D+1.6S+L
Two-Way Shear (lbs)	3,773	61,947	Passed (6% used)	LRFD	1.2D+1.6S+L
Moment X (ft-lbs)	660	16,081	Passed (4% used)	LRFD	1.2D+1.6S+L
Moment Y (ft-lbs)	660	16,081	Passed (4% used)	LRFD	1.2D+1.6S+L
Crushing (lbs)	5,941	212,160	Passed (3% used)	LRFD	1.2D+1.6S+L
Depth Above Bars (in)	6	7	Passed (89% used)	code	ACI 318-14 13.3.1.2

Footing Specification

as entered on the footing, and the mat the check selected

Geometry	
Shape	Square
Column type	Concrete
Footing width	2'
Footing length	2'
Footing depth	10"
Column width	8"
Column length	8"
Pedestal height	4"
Pedestal width	4"
Pedestal length	4"

Footing Properties	
Steel yield strength	60,000 psi
Concrete strength	3,000 psi
Soil bearing pressure	1,500 psf
Concrete density	145 pcf
Top reinf. cover	3"
Bottom reinf. cover	3"
Side reinf. cover	3"
Aggregate diameter	3/4"

Soil Properties	
Soil depth above footing	0
Soil density	140 pcf
Soil cohesion	0 psf
Friction angle	30°
Water level	0

Reinforcement	
Bottom mat	Bot.(3) #4 Long, (3) #4 Short
Bars the long way	(3) #4
Bars the short way	(3) #4
Selected for	moment and minimum steel
Plain concrete (no reinforcing)	No
Override rebar	No
Include water level	No
Allow bearing pressure increase	No

- Soil bearing is checked at service level (ASD) and includes the footing's own weight; shear, moment and crushing at strength level (LRFD), ACI 318-14, loads combined to ASCE 7-16.
- Reinforcement is selected for the moment and for minimum steel (ACI 318-14: 0.0018 Ag for Grade 60), at no more than 3h or 18 in.

Applied Loads	Location	Trib. Width	Dead (0.90)	Snow (1.15)	Comments
1 - Point (lb)	--	N/A	417.1	3,400	Linked from: Beam #21, Support 1

SpotFtg Bm #21-2

Spot Footing 2' x 2' x 10" deep -- Bot.(3) #4 Long, (3) #4 Short

Level: Foundation | f'c 3,000 psi | rebar Fy 60 ksi | soil 1,500 psf | Concrete column 8" x 8" | ACI 318-14

PASSED

Controls: Depth Above Bars 89% used
Adequacy 28.3% (capacity to spare)

WHAT LOADS IT

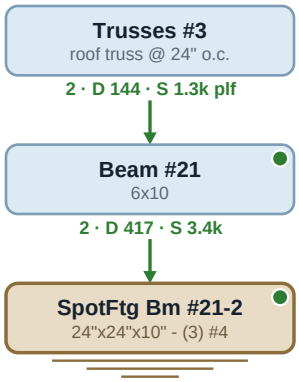

SECTION

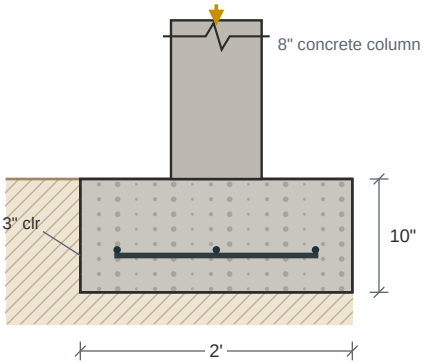

PLAN -- BOTTOM MAT

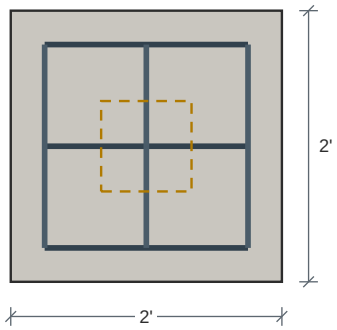

Bot.(3) #4 Long, (3) #4 Short

Carrying: Dead 417 lb Snow 3,400 lb

Design Results	Actual	Allowed	Result	Method	Load Combination
Soil Bearing Pressure (psf)	1,075	1,500	Passed (72% used)	ASD	D+S
One-Way Shear X (lbs)	433	12,324	Passed (4% used)	LRFD	1.2D+1.6S+L
One-Way Shear Y (lbs)	433	12,324	Passed (4% used)	LRFD	1.2D+1.6S+L
Two-Way Shear (lbs)	3,773	61,947	Passed (6% used)	LRFD	1.2D+1.6S+L
Moment X (ft-lbs)	660	16,081	Passed (4% used)	LRFD	1.2D+1.6S+L
Moment Y (ft-lbs)	660	16,081	Passed (4% used)	LRFD	1.2D+1.6S+L
Crushing (lbs)	5,941	212,160	Passed (3% used)	LRFD	1.2D+1.6S+L
Depth Above Bars (in)	6	7	Passed (89% used)	code	ACI 318-14 13.3.1.2

Footing Specification

as entered on the footing, and the mat the check selected

Geometry	
Shape	Square
Column type	Concrete
Footing width	2'
Footing length	2'
Footing depth	10"
Column width	8"
Column length	8"
Pedestal height	4"
Pedestal width	4"
Pedestal length	4"

Footing Properties	
Steel yield strength	60,000 psi
Concrete strength	3,000 psi
Soil bearing pressure	1,500 psf
Concrete density	145 pcf
Top reinf. cover	3"
Bottom reinf. cover	3"
Side reinf. cover	3"
Aggregate diameter	3/4"

Soil Properties	
Soil depth above footing	0
Soil density	140 pcf
Soil cohesion	0 psf
Friction angle	30°
Water level	0

Reinforcement	
Bottom mat	Bot.(3) #4 Long, (3) #4 Short
Bars the long way	(3) #4
Bars the short way	(3) #4
Selected for	moment and minimum steel
Plain concrete (no reinforcing)	No
Override rebar	No
Include water level	No
Allow bearing pressure increase	No

- Soil bearing is checked at service level (ASD) and includes the footing's own weight; shear, moment and crushing at strength level (LRFD), ACI 318-14, loads combined to ASCE 7-16.
- Reinforcement is selected for the moment and for minimum steel (ACI 318-14: 0.0018 Ag for Grade 60), at no more than 3h or 18 in.

Applied Loads	Location	Trib. Width	Dead (0.90)	Snow (1.15)	Comments
1 - Point (lb)	--	N/A	417.1	3,400	Linked from: Beam #21, Support 2

SpotFtg Bm #22-1

PASSED

Spot Footing 1' 4" x 1' 4" x 10" deep -- Bot.(2) #4 Long, (2) #4 Short

Level: Foundation | f'c 3,000 psi | rebar Fy 60 ksi | soil 1,500 psf | Concrete column 8" x 8" | ACI 318-14

Controls: Depth Above Bars 89% used
Adequacy 79.9% (capacity to spare)

WHAT LOADS IT

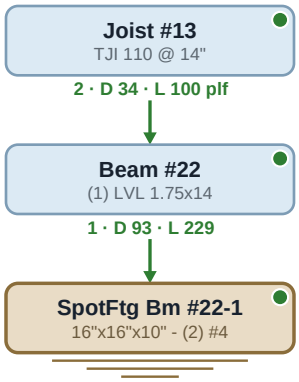

SECTION

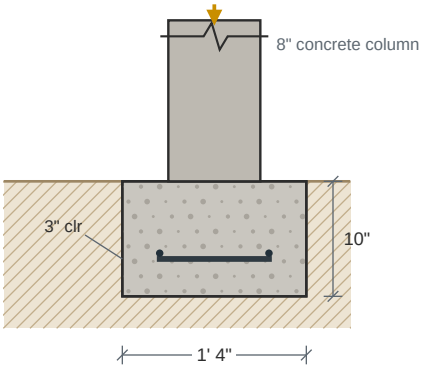

PLAN -- BOTTOM MAT

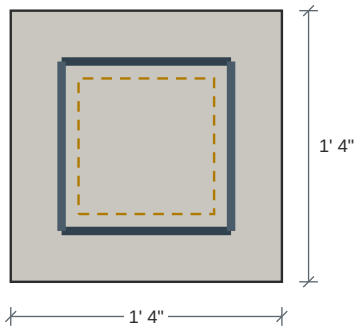

Bot.(2) #4 Long, (2) #4 Short

Carrying: Dead 93 lb Floor Live 229 lb

Design Results	Actual	Allowed	Result	Method	Load Combination
Soil Bearing Pressure (psf)	302	1,500	Passed (20% used)	ASD	D+L
One-Way Shear X (lbs)	0	8,216	Passed (0% used)	LRFD	1.2D+1.6L+0.5Lr
One-Way Shear Y (lbs)	0	8,216	Passed (0% used)	LRFD	1.2D+1.6L+0.5Lr
Two-Way Shear (lbs)	86	61,947	Passed (0% used)	LRFD	1.2D+1.6L+0.5Lr
Moment X (ft-lbs)	20	10,721	Passed (0% used)	LRFD	1.2D+1.6L+0.5Lr
Moment Y (ft-lbs)	20	10,721	Passed (0% used)	LRFD	1.2D+1.6L+0.5Lr
Crushing (lbs)	479	212,160	Passed (0% used)	LRFD	1.2D+1.6L+0.5Lr
Depth Above Bars (in)	6	7	Passed (89% used)	code	ACI 318-14 13.3.1.2

Footing Specification

as entered on the footing, and the mat the check selected

Geometry	
Shape	Square
Column type	Concrete
Footing width	1' 4"
Footing length	1' 4"
Footing depth	10"
Column width	8"
Column length	8"
Pedestal height	4"
Pedestal width	4"
Pedestal length	4"

Footing Properties	
Steel yield strength	60,000 psi
Concrete strength	3,000 psi
Soil bearing pressure	1,500 psf
Concrete density	145 pcf
Top reinf. cover	3"
Bottom reinf. cover	3"
Side reinf. cover	3"
Aggregate diameter	3/4"

Soil Properties	
Soil depth above footing	0
Soil density	140 pcf
Soil cohesion	0 psf
Friction angle	30°
Water level	0

Reinforcement	
Bottom mat	Bot.(2) #4 Long, (2) #4 Short
Bars the long way	(2) #4
Bars the short way	(2) #4
Selected for	moment and minimum steel
Plain concrete (no reinforcing)	No
Override rebar	No
Include water level	No
Allow bearing pressure increase	No

- Soil bearing is checked at service level (ASD) and includes the footing's own weight; shear, moment and crushing at strength level (LRFD), ACI 318-14, loads combined to ASCE 7-16.
- Reinforcement is selected for the moment and for minimum steel (ACI 318-14: 0.0018 Ag for Grade 60), at no more than 3h or 18 in.

Applied Loads	Location	Trib. Width	Dead (0.90)	Floor Live (1.00)	Comments
1 - Point (lb)	--	N/A	93.2	229.2	Linked from: Beam #22, Support 1

SpotFtg Bm #22-2

PASSED

Spot Footing 1' 4" x 1' 4" x 10" deep -- Bot.(2) #4 Long, (2) #4 Short

Level: Foundation | f'c 3,000 psi | rebar Fy 60 ksi | soil 1,500 psf | Concrete column 8" x 8" | ACI 318-14

Controls: Depth Above Bars 89% used
Adequacy 79.9% (capacity to spare)

WHAT LOADS IT

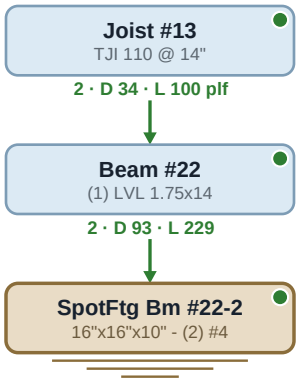

SECTION

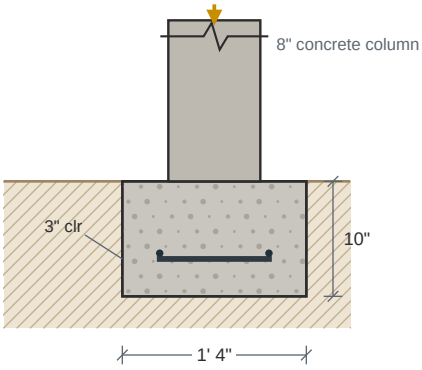

PLAN -- BOTTOM MAT

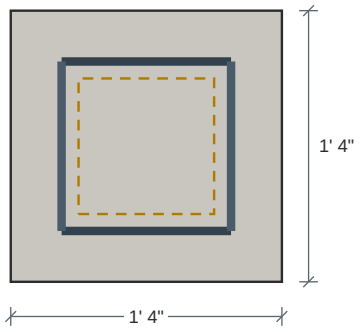

Bot.(2) #4 Long, (2) #4 Short

Carrying: Dead 93 lb Floor Live 229 lb

Design Results	Actual	Allowed	Result	Method	Load Combination
Soil Bearing Pressure (psf)	302	1,500	Passed (20% used)	ASD	D+L
One-Way Shear X (lbs)	0	8,216	Passed (0% used)	LRFD	1.2D+1.6L+0.5Lr
One-Way Shear Y (lbs)	0	8,216	Passed (0% used)	LRFD	1.2D+1.6L+0.5Lr
Two-Way Shear (lbs)	86	61,947	Passed (0% used)	LRFD	1.2D+1.6L+0.5Lr
Moment X (ft-lbs)	20	10,721	Passed (0% used)	LRFD	1.2D+1.6L+0.5Lr
Moment Y (ft-lbs)	20	10,721	Passed (0% used)	LRFD	1.2D+1.6L+0.5Lr
Crushing (lbs)	479	212,160	Passed (0% used)	LRFD	1.2D+1.6L+0.5Lr
Depth Above Bars (in)	6	7	Passed (89% used)	code	ACI 318-14 13.3.1.2

Footing Specification

as entered on the footing, and the mat the check selected

Geometry	
Shape	Square
Column type	Concrete
Footing width	1' 4"
Footing length	1' 4"
Footing depth	10"
Column width	8"
Column length	8"
Pedestal height	4"
Pedestal width	4"
Pedestal length	4"

Footing Properties	
Steel yield strength	60,000 psi
Concrete strength	3,000 psi
Soil bearing pressure	1,500 psf
Concrete density	145 pcf
Top reinf. cover	3"
Bottom reinf. cover	3"
Side reinf. cover	3"
Aggregate diameter	3/4"

Soil Properties	
Soil depth above footing	0
Soil density	140 pcf
Soil cohesion	0 psf
Friction angle	30°
Water level	0

Reinforcement	
Bottom mat	Bot.(2) #4 Long, (2) #4 Short
Bars the long way	(2) #4
Bars the short way	(2) #4
Selected for	moment and minimum steel
Plain concrete (no reinforcing)	No
Override rebar	No
Include water level	No
Allow bearing pressure increase	No

- Soil bearing is checked at service level (ASD) and includes the footing's own weight; shear, moment and crushing at strength level (LRFD), ACI 318-14, loads combined to ASCE 7-16.
- Reinforcement is selected for the moment and for minimum steel (ACI 318-14: 0.0018 Ag for Grade 60), at no more than 3h or 18 in.

Applied Loads	Location	Trib. Width	Dead (0.90)	Floor Live (1.00)	Comments
1 - Point (lb)	--	N/A	93.2	229.2	Linked from: Beam #22, Support 2

SpotFtg Bm #24-1

PASSED

Spot Footing 2' x 2' x 10" deep -- Bot.(3) #4 Long, (3) #4 Short

Level: Foundation | f'c 3,000 psi | rebar Fy 60 ksi | soil 1,500 psf | Wood column 5 1/2" x 5 1/2" | ACI 318-14

Controls: Depth Above Bars 89% used
Adequacy 32.3% (capacity to spare)

WHAT LOADS IT

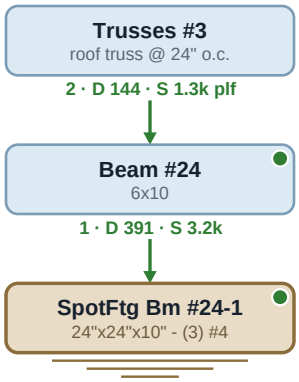

SECTION

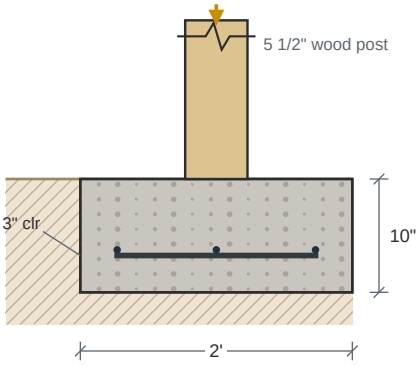

PLAN -- BOTTOM MAT

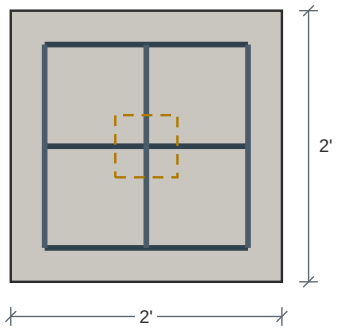

Bot.(3) #4 Long, (3) #4 Short

Carrying: Dead 391 lb Snow 3,188 lb

Design Results	Actual	Allowed	Result	Method	Load Combination
Soil Bearing Pressure (psf)	1,015	1,500	Passed (68% used)	ASD	D+S
One-Way Shear X (lbs)	696	12,324	Passed (6% used)	LRFD	1.2D+1.6S+L
One-Way Shear Y (lbs)	696	12,324	Passed (6% used)	LRFD	1.2D+1.6S+L
Two-Way Shear (lbs)	4,177	51,267	Passed (8% used)	LRFD	1.2D+1.6S+L
Moment X (ft-lbs)	1,092	16,081	Passed (7% used)	LRFD	1.2D+1.6S+L
Moment Y (ft-lbs)	1,092	16,081	Passed (7% used)	LRFD	1.2D+1.6S+L
Crushing (lbs)	5,569	100,279	Passed (6% used)	LRFD	1.2D+1.6S+L
Depth Above Bars (in)	6	7	Passed (89% used)	code	ACI 318-14 13.3.1.2

Footing Specification

as entered on the footing, and the mat the check selected

Geometry	
Shape	Square
Column type	Wood
Footing width	2'
Footing length	2'
Footing depth	10"
Column width	5 1/2"
Column length	5 1/2"
Pedestal height	4"
Pedestal width	4"
Pedestal length	4"

Footing Properties	
Steel yield strength	60,000 psi
Concrete strength	3,000 psi
Soil bearing pressure	1,500 psf
Concrete density	145 pcf
Top reinf. cover	3"
Bottom reinf. cover	3"
Side reinf. cover	3"
Aggregate diameter	3/4"

Soil Properties	
Soil depth above footing	0
Soil density	140 pcf
Soil cohesion	0 psf
Friction angle	30°
Water level	0

Reinforcement	
Bottom mat	Bot.(3) #4 Long, (3) #4 Short
Bars the long way	(3) #4
Bars the short way	(3) #4
Selected for	moment and minimum steel
Plain concrete (no reinforcing)	No
Override rebar	No
Include water level	No
Allow bearing pressure increase	No

- Soil bearing is checked at service level (ASD) and includes the footing's own weight; shear, moment and crushing at strength level (LRFD), ACI 318-14, loads combined to ASCE 7-16.
- Reinforcement is selected for the moment and for minimum steel (ACI 318-14: 0.0018 Ag for Grade 60), at no more than 3h or 18 in.
- Wood post: check bearing on the post itself, its Fc-perp can govern below the concrete value.

Applied Loads	Location	Trib. Width	Dead (0.90)	Snow (1.15)	Comments
1 - Point (lb)	--	N/A	391	3,188	Linked from: Beam #24, Support 1

SpotFtg Bm #24-2

Spot Footing 2' x 2' x 10" deep -- Bot.(3) #4 Long, (3) #4 Short

Level: Foundation | f'c 3,000 psi | rebar Fy 60 ksi | soil 1,500 psf | Concrete column 8" x 8" | ACI 318-14

PASSED

Controls: Depth Above Bars 89% used
Adequacy 32.3% (capacity to spare)

WHAT LOADS IT

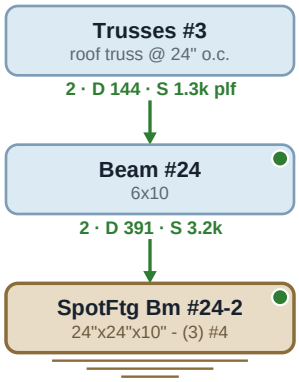

SECTION

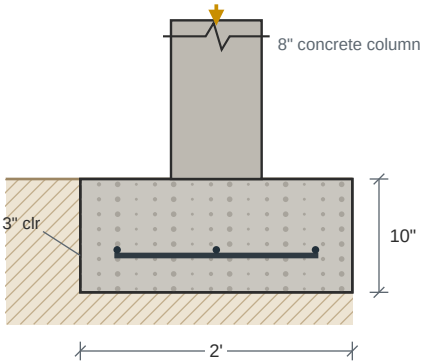

PLAN -- BOTTOM MAT

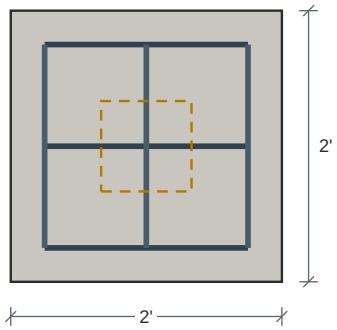

Bot.(3) #4 Long, (3) #4 Short

Carrying: Dead 391 lb Snow 3,188 lb

Design Results	Actual	Allowed	Result	Method	Load Combination
Soil Bearing Pressure (psf)	1,015	1,500	Passed (68% used)	ASD	D+S
One-Way Shear X (lbs)	406	12,324	Passed (3% used)	LRFD	1.2D+1.6S+L
One-Way Shear Y (lbs)	406	12,324	Passed (3% used)	LRFD	1.2D+1.6S+L
Two-Way Shear (lbs)	3,536	61,947	Passed (6% used)	LRFD	1.2D+1.6S+L
Moment X (ft-lbs)	619	16,081	Passed (4% used)	LRFD	1.2D+1.6S+L
Moment Y (ft-lbs)	619	16,081	Passed (4% used)	LRFD	1.2D+1.6S+L
Crushing (lbs)	5,569	212,160	Passed (3% used)	LRFD	1.2D+1.6S+L
Depth Above Bars (in)	6	7	Passed (89% used)	code	ACI 318-14 13.3.1.2

Footing Specification

as entered on the footing, and the mat the check selected

Geometry	
Shape	Square
Column type	Concrete
Footing width	2'
Footing length	2'
Footing depth	10"
Column width	8"
Column length	8"
Pedestal height	4"
Pedestal width	4"
Pedestal length	4"

Footing Properties	
Steel yield strength	60,000 psi
Concrete strength	3,000 psi
Soil bearing pressure	1,500 psf
Concrete density	145 pcf
Top reinf. cover	3"
Bottom reinf. cover	3"
Side reinf. cover	3"
Aggregate diameter	3/4"

Soil Properties and Post	
Soil depth above footing	0
Soil density	140 pcf
Soil cohesion	0 psf
Friction angle	30°
Water level	0
Post	6x6 post (assumed)
Post base	ABU66Z, p. 76
Cap	ECCQ66SDS2.5, p. 99

Reinforcement	
Bottom mat	Bot.(3) #4 Long, (3) #4 Short
Bars the long way	(3) #4
Bars the short way	(3) #4
Selected for	moment and minimum steel
Plain concrete (no reinforcing)	No
Override rebar	No
Include water level	No
Allow bearing pressure increase	No

- Soil bearing is checked at service level (ASD) and includes the footing's own weight; shear, moment and crushing at strength level (LRFD), ACI 318-14, loads combined to ASCE 7-16.
- Reinforcement is selected for the moment and for minimum steel (ACI 318-14: 0.0018 Ag for Grade 60), at no more than 3h or 18 in.

Applied Loads	Location	Trib. Width	Dead (0.90)	Snow (1.15)	Comments
1 - Point (lb)	--	N/A	391	3,188	Linked from: Beam #24, Support 2

SpotFtg Bm #25-1

Spot Footing 2' x 2' x 10" deep -- Bot.(3) #4 Long, (3) #4 Short

Level: Foundation | f'c 3,000 psi | rebar Fy 60 ksi | soil 1,500 psf | Concrete column 8" x 8" | ACI 318-14

PASSED

Controls: Depth Above Bars 89% used
Adequacy 32.3% (capacity to spare)

WHAT LOADS IT

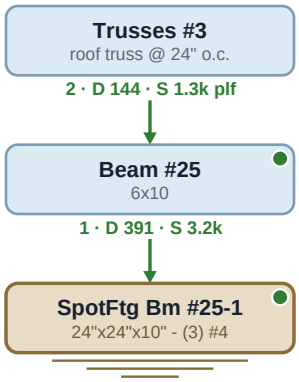

SECTION

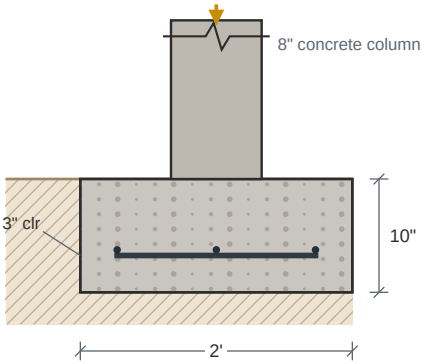

PLAN -- BOTTOM MAT

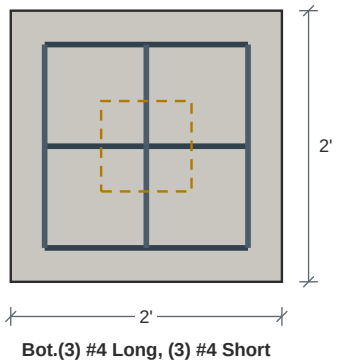

Bot.(3) #4 Long, (3) #4 Short

Carrying: Dead 391 lb Snow 3,188 lb

Design Results	Actual	Allowed	Result	Method	Load Combination
Soil Bearing Pressure (psf)	1,015	1,500	Passed (68% used)	ASD	D+S
One-Way Shear X (lbs)	406	12,324	Passed (3% used)	LRFD	1.2D+1.6S+L
One-Way Shear Y (lbs)	406	12,324	Passed (3% used)	LRFD	1.2D+1.6S+L
Two-Way Shear (lbs)	3,536	61,947	Passed (6% used)	LRFD	1.2D+1.6S+L
Moment X (ft-lbs)	619	16,081	Passed (4% used)	LRFD	1.2D+1.6S+L
Moment Y (ft-lbs)	619	16,081	Passed (4% used)	LRFD	1.2D+1.6S+L
Crushing (lbs)	5,569	212,160	Passed (3% used)	LRFD	1.2D+1.6S+L
Depth Above Bars (in)	6	7	Passed (89% used)	code	ACI 318-14 13.3.1.2

Footing Specification

as entered on the footing, and the mat the check selected

Geometry	
Shape	Square
Column type	Concrete
Footing width	2'
Footing length	2'
Footing depth	10"
Column width	8"
Column length	8"
Pedestal height	4"
Pedestal width	4"
Pedestal length	4"

Footing Properties	
Steel yield strength	60,000 psi
Concrete strength	3,000 psi
Soil bearing pressure	1,500 psf
Concrete density	145 pcf
Top reinf. cover	3"
Bottom reinf. cover	3"
Side reinf. cover	3"
Aggregate diameter	3/4"

Soil Properties and Post	
Soil depth above footing	0
Soil density	140 pcf
Soil cohesion	0 psf
Friction angle	30°
Water level	0
Post	6x6 post (assumed)
Post base	ABU66Z, p. 76
Cap	ECCQ66SDS2.5, p. 99

Reinforcement	
Bottom mat	Bot.(3) #4 Long, (3) #4 Short
Bars the long way	(3) #4
Bars the short way	(3) #4
Selected for	moment and minimum steel
Plain concrete (no reinforcing)	No
Override rebar	No
Include water level	No
Allow bearing pressure increase	No

- Soil bearing is checked at service level (ASD) and includes the footing's own weight; shear, moment and crushing at strength level (LRFD), ACI 318-14, loads combined to ASCE 7-16.
- Reinforcement is selected for the moment and for minimum steel (ACI 318-14: 0.0018 Ag for Grade 60), at no more than 3h or 18 in.

Applied Loads	Location	Trib. Width	Dead (0.90)	Snow (1.15)	Comments
1 - Point (lb)	--	N/A	391	3,188	Linked from: Beam #25, Support 1

SpotFtg Bm #25-2

Spot Footing 2' x 2' x 10" deep -- Bot.(3) #4 Long, (3) #4 Short

Level: Foundation | f'c 3,000 psi | rebar Fy 60 ksi | soil 1,500 psf | Concrete column 8" x 8" | ACI 318-14

PASSED

Controls: Depth Above Bars 89% used
Adequacy 32.3% (capacity to spare)

WHAT LOADS IT

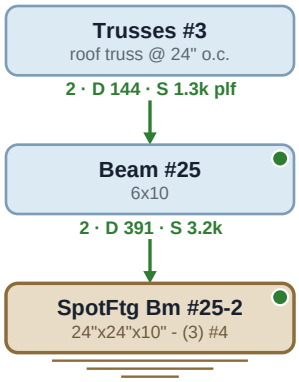

SECTION

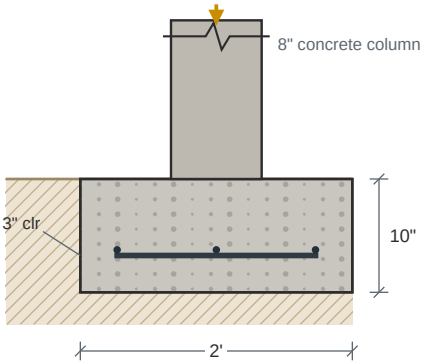

PLAN -- BOTTOM MAT

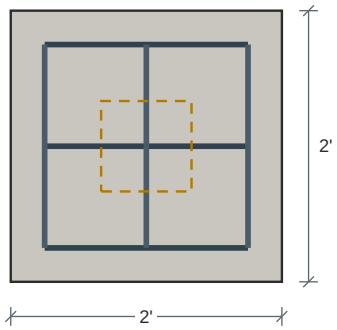

Bot.(3) #4 Long, (3) #4 Short

Carrying: Dead 391 lb Snow 3,188 lb

Design Results	Actual	Allowed	Result	Method	Load Combination
Soil Bearing Pressure (psf)	1,015	1,500	Passed (68% used)	ASD	D+S
One-Way Shear X (lbs)	406	12,324	Passed (3% used)	LRFD	1.2D+1.6S+L
One-Way Shear Y (lbs)	406	12,324	Passed (3% used)	LRFD	1.2D+1.6S+L
Two-Way Shear (lbs)	3,536	61,947	Passed (6% used)	LRFD	1.2D+1.6S+L
Moment X (ft-lbs)	619	16,081	Passed (4% used)	LRFD	1.2D+1.6S+L
Moment Y (ft-lbs)	619	16,081	Passed (4% used)	LRFD	1.2D+1.6S+L
Crushing (lbs)	5,569	212,160	Passed (3% used)	LRFD	1.2D+1.6S+L
Depth Above Bars (in)	6	7	Passed (89% used)	code	ACI 318-14 13.3.1.2

Footing Specification

as entered on the footing, and the mat the check selected

Geometry	
Shape	Square
Column type	Concrete
Footing width	2'
Footing length	2'
Footing depth	10"
Column width	8"
Column length	8"
Pedestal height	4"
Pedestal width	4"
Pedestal length	4"

Footing Properties	
Steel yield strength	60,000 psi
Concrete strength	3,000 psi
Soil bearing pressure	1,500 psf
Concrete density	145 pcf
Top reinf. cover	3"
Bottom reinf. cover	3"
Side reinf. cover	3"
Aggregate diameter	3/4"

Soil Properties and Post	
Soil depth above footing	0
Soil density	140 pcf
Soil cohesion	0 psf
Friction angle	30°
Water level	0
Post	6x6 post (assumed)
Post base	ABU66Z, p. 76
Cap	ECCQ66SDS2.5, p. 99

Reinforcement	
Bottom mat	Bot.(3) #4 Long, (3) #4 Short
Bars the long way	(3) #4
Bars the short way	(3) #4
Selected for	moment and minimum steel
Plain concrete (no reinforcing)	No
Override rebar	No
Include water level	No
Allow bearing pressure increase	No

- Soil bearing is checked at service level (ASD) and includes the footing's own weight; shear, moment and crushing at strength level (LRFD), ACI 318-14, loads combined to ASCE 7-16.
- Reinforcement is selected for the moment and for minimum steel (ACI 318-14: 0.0018 Ag for Grade 60), at no more than 3h or 18 in.

Applied Loads	Location	Trib. Width	Dead (0.90)	Snow (1.15)	Comments
1 - Point (lb)	--	N/A	391	3,188	Linked from: Beam #25, Support 2

SpotFtg Bm #26-1

Spot Footing 1' 6" x 1' 6" x 10" deep -- Bot.(2) #4 Long, (2) #4 Short

Level: Foundation | f'c 3,000 psi | rebar Fy 60 ksi | soil 1,500 psf | Concrete column 8" x 8" | ACI 318-14

PASSED

Controls: Soil Bearing Pressure 96% used

Adequacy 3.9% (capacity to spare)

WHAT LOADS IT

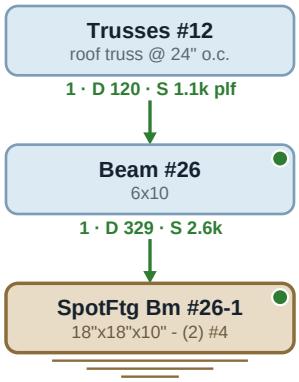

SECTION

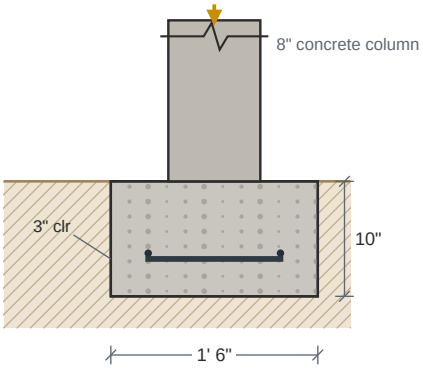

PLAN -- BOTTOM MAT

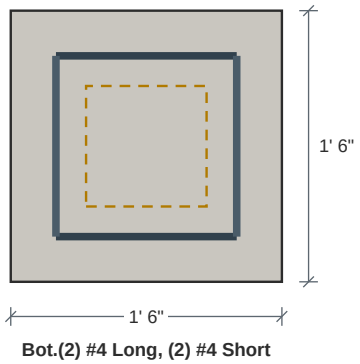

Bot.(2) #4 Long, (2) #4 Short

Carrying: Dead 329 lb Snow 2,642 lb

Design Results	Actual	Allowed	Result	Method	Load Combination
Soil Bearing Pressure (psf)	1,442	1,500	Passed (96% used)	ASD	D+S
One-Way Shear X (lbs)	0	9,243	Passed (0% used)	LRFD	1.2D+1.6S+L
One-Way Shear Y (lbs)	0	9,243	Passed (0% used)	LRFD	1.2D+1.6S+L
Two-Way Shear (lbs)	1,623	61,947	Passed (3% used)	LRFD	1.2D+1.6S+L
Moment X (ft-lbs)	268	10,779	Passed (2% used)	LRFD	1.2D+1.6S+L
Moment Y (ft-lbs)	268	10,779	Passed (2% used)	LRFD	1.2D+1.6S+L
Crushing (lbs)	4,623	212,160	Passed (2% used)	LRFD	1.2D+1.6S+L
Depth Above Bars (in)	6	7	Passed (89% used)	code	ACI 318-14 13.3.1.2

Footing Specification

as entered on the footing, and the mat the check selected

Geometry	
Shape	Square
Column type	Concrete
Footing width	1' 6"
Footing length	1' 6"
Footing depth	10"
Column width	8"
Column length	8"
Pedestal height	4"
Pedestal width	4"
Pedestal length	4"

Footing Properties	
Steel yield strength	60,000 psi
Concrete strength	3,000 psi
Soil bearing pressure	1,500 psf
Concrete density	145 pcf
Top reinf. cover	3"
Bottom reinf. cover	3"
Side reinf. cover	3"
Aggregate diameter	3/4"

Soil Properties	
Soil depth above footing	0
Soil density	140 pcf
Soil cohesion	0 psf
Friction angle	30°
Water level	0

Reinforcement	
Bottom mat	Bot.(2) #4 Long, (2) #4 Short
Bars the long way	(2) #4
Bars the short way	(2) #4
Selected for	moment and minimum steel
Plain concrete (no reinforcing)	No
Override rebar	No
Include water level	No
Allow bearing pressure increase	No

- Soil bearing is checked at service level (ASD) and includes the footing's own weight; shear, moment and crushing at strength level (LRFD), ACI 318-14, loads combined to ASCE 7-16.
- Reinforcement is selected for the moment and for minimum steel (ACI 318-14: 0.0018 Ag for Grade 60), at no more than 3h or 18 in.

Applied Loads	Location	Trib. Width	Dead (0.90)	Snow (1.15)	Comments
1 - Point (lb)	--	N/A	329.2	2,642	Linked from: Beam #26, Support 1

SpotFtg Bm #26-2

Spot Footing 1' 6" x 1' 6" x 10" deep -- Bot.(2) #4 Long, (2) #4 Short

Level: Foundation | f'c 3,000 psi | rebar Fy 60 ksi | soil 1,500 psf | Concrete column 8" x 8" | ACI 318-14

PASSED

Controls: Soil Bearing Pressure 96% used
Adequacy 3.9% (capacity to spare)

WHAT LOADS IT

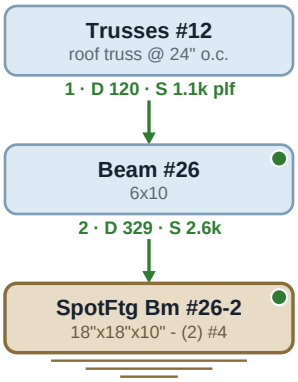

SECTION

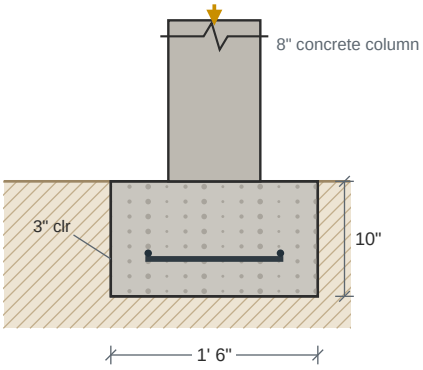

PLAN -- BOTTOM MAT

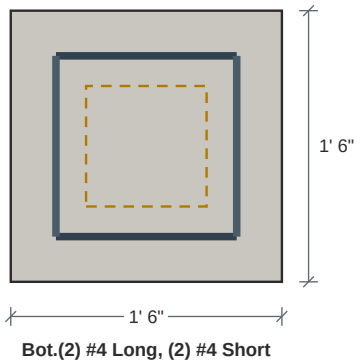

Bot.(2) #4 Long, (2) #4 Short

Carrying: Dead 329 lb Snow 2,642 lb

Design Results	Actual	Allowed	Result	Method	Load Combination
Soil Bearing Pressure (psf)	1,442	1,500	Passed (96% used)	ASD	D+S
One-Way Shear X (lbs)	0	9,243	Passed (0% used)	LRFD	1.2D+1.6S+L
One-Way Shear Y (lbs)	0	9,243	Passed (0% used)	LRFD	1.2D+1.6S+L
Two-Way Shear (lbs)	1,623	61,947	Passed (3% used)	LRFD	1.2D+1.6S+L
Moment X (ft-lbs)	268	10,779	Passed (2% used)	LRFD	1.2D+1.6S+L
Moment Y (ft-lbs)	268	10,779	Passed (2% used)	LRFD	1.2D+1.6S+L
Crushing (lbs)	4,623	212,160	Passed (2% used)	LRFD	1.2D+1.6S+L
Depth Above Bars (in)	6	7	Passed (89% used)	code	ACI 318-14 13.3.1.2

Footing Specification

as entered on the footing, and the mat the check selected

Geometry	
Shape	Square
Column type	Concrete
Footing width	1' 6"
Footing length	1' 6"
Footing depth	10"
Column width	8"
Column length	8"
Pedestal height	4"
Pedestal width	4"
Pedestal length	4"

Footing Properties	
Steel yield strength	60,000 psi
Concrete strength	3,000 psi
Soil bearing pressure	1,500 psf
Concrete density	145 pcf
Top reinf. cover	3"
Bottom reinf. cover	3"
Side reinf. cover	3"
Aggregate diameter	3/4"

Soil Properties	
Soil depth above footing	0
Soil density	140 pcf
Soil cohesion	0 psf
Friction angle	30°
Water level	0

Reinforcement	
Bottom mat	Bot.(2) #4 Long, (2) #4 Short
Bars the long way	(2) #4
Bars the short way	(2) #4
Selected for	moment and minimum steel
Plain concrete (no reinforcing)	No
Override rebar	No
Include water level	No
Allow bearing pressure increase	No

- Soil bearing is checked at service level (ASD) and includes the footing's own weight; shear, moment and crushing at strength level (LRFD), ACI 318-14, loads combined to ASCE 7-16.
- Reinforcement is selected for the moment and for minimum steel (ACI 318-14: 0.0018 Ag for Grade 60), at no more than 3h or 18 in.

Applied Loads	Location	Trib. Width	Dead (0.90)	Snow (1.15)	Comments
1 - Point (lb)	--	N/A	329.2	2,642	Linked from: Beam #26, Support 2

SpotFtg Bm #27-1

Spot Footing 1' 6" x 1' 6" x 10" deep -- Bot.(2) #4 Long, (2) #4 Short

Level: Foundation | f'c 3,000 psi | rebar Fy 60 ksi | soil 1,500 psf | Concrete column 8" x 8" | ACI 318-14

PASSED

Controls: Soil Bearing Pressure 96% used

Adequacy 3.9% (capacity to spare)

WHAT LOADS IT

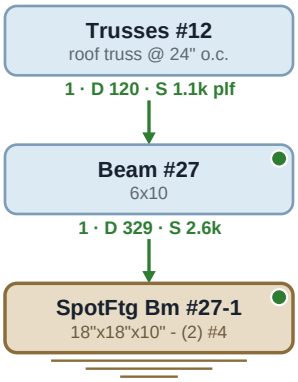

SECTION

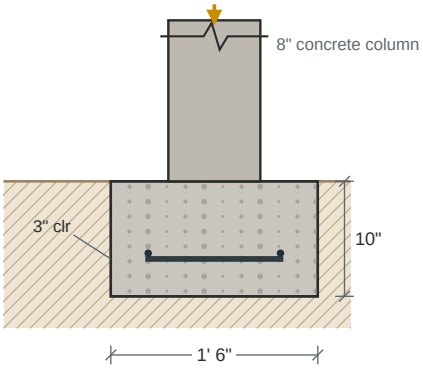

PLAN -- BOTTOM MAT

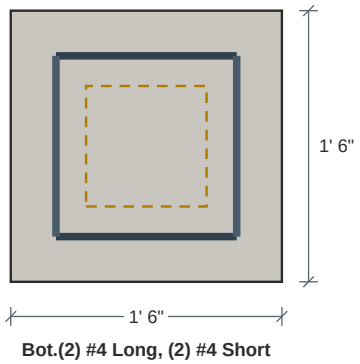

Bot.(2) #4 Long, (2) #4 Short

Carrying: Dead 329 lb Snow 2,642 lb

Design Results	Actual	Allowed	Result	Method	Load Combination
Soil Bearing Pressure (psf)	1,442	1,500	Passed (96% used)	ASD	D+S
One-Way Shear X (lbs)	0	9,243	Passed (0% used)	LRFD	1.2D+1.6S+L
One-Way Shear Y (lbs)	0	9,243	Passed (0% used)	LRFD	1.2D+1.6S+L
Two-Way Shear (lbs)	1,623	61,947	Passed (3% used)	LRFD	1.2D+1.6S+L
Moment X (ft-lbs)	268	10,779	Passed (2% used)	LRFD	1.2D+1.6S+L
Moment Y (ft-lbs)	268	10,779	Passed (2% used)	LRFD	1.2D+1.6S+L
Crushing (lbs)	4,623	212,160	Passed (2% used)	LRFD	1.2D+1.6S+L
Depth Above Bars (in)	6	7	Passed (89% used)	code	ACI 318-14 13.3.1.2

Footing Specification

as entered on the footing, and the mat the check selected

Geometry	
Shape	Square
Column type	Concrete
Footing width	1' 6"
Footing length	1' 6"
Footing depth	10"
Column width	8"
Column length	8"
Pedestal height	4"
Pedestal width	4"
Pedestal length	4"

Footing Properties	
Steel yield strength	60,000 psi
Concrete strength	3,000 psi
Soil bearing pressure	1,500 psf
Concrete density	145 pcf
Top reinf. cover	3"
Bottom reinf. cover	3"
Side reinf. cover	3"
Aggregate diameter	3/4"

Soil Properties	
Soil depth above footing	0
Soil density	140 pcf
Soil cohesion	0 psf
Friction angle	30°
Water level	0

Reinforcement	
Bottom mat	Bot.(2) #4 Long, (2) #4 Short
Bars the long way	(2) #4
Bars the short way	(2) #4
Selected for	moment and minimum steel
Plain concrete (no reinforcing)	No
Override rebar	No
Include water level	No
Allow bearing pressure increase	No

- Soil bearing is checked at service level (ASD) and includes the footing's own weight; shear, moment and crushing at strength level (LRFD), ACI 318-14, loads combined to ASCE 7-16.
- Reinforcement is selected for the moment and for minimum steel (ACI 318-14: 0.0018 Ag for Grade 60), at no more than 3h or 18 in.

Applied Loads	Location	Trib. Width	Dead (0.90)	Snow (1.15)	Comments
1 - Point (lb)	--	N/A	329.2	2,642	Linked from: Beam #27, Support 1

SpotFtg Bm #27-2

Spot Footing 1' 6" x 1' 6" x 10" deep -- Bot.(2) #4 Long, (2) #4 Short

Level: Foundation | f'c 3,000 psi | rebar Fy 60 ksi | soil 1,500 psf | Concrete column 8" x 8" | ACI 318-14

PASSED

Controls: Soil Bearing Pressure 96% used
Adequacy 3.9% (capacity to spare)

WHAT LOADS IT

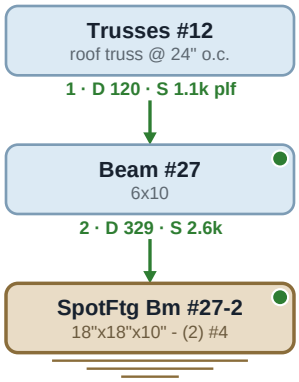

SECTION

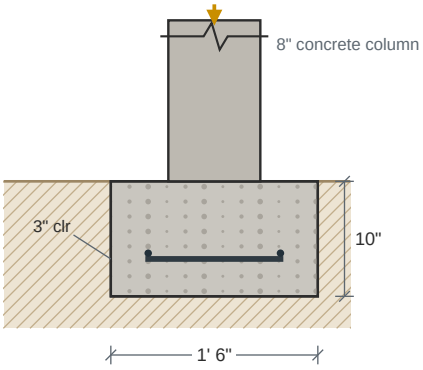

PLAN -- BOTTOM MAT

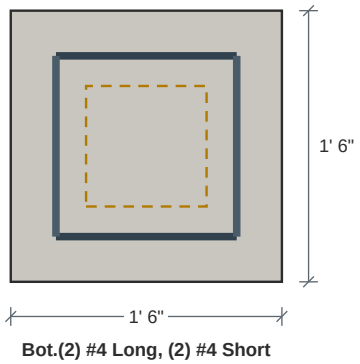

Bot.(2) #4 Long, (2) #4 Short

Carrying: Dead 329 lb Snow 2,642 lb

Design Results	Actual	Allowed	Result	Method	Load Combination
Soil Bearing Pressure (psf)	1,442	1,500	Passed (96% used)	ASD	D+S
One-Way Shear X (lbs)	0	9,243	Passed (0% used)	LRFD	1.2D+1.6S+L
One-Way Shear Y (lbs)	0	9,243	Passed (0% used)	LRFD	1.2D+1.6S+L
Two-Way Shear (lbs)	1,623	61,947	Passed (3% used)	LRFD	1.2D+1.6S+L
Moment X (ft-lbs)	268	10,779	Passed (2% used)	LRFD	1.2D+1.6S+L
Moment Y (ft-lbs)	268	10,779	Passed (2% used)	LRFD	1.2D+1.6S+L
Crushing (lbs)	4,623	212,160	Passed (2% used)	LRFD	1.2D+1.6S+L
Depth Above Bars (in)	6	7	Passed (89% used)	code	ACI 318-14 13.3.1.2

Footing Specification

as entered on the footing, and the mat the check selected

Geometry	
Shape	Square
Column type	Concrete
Footing width	1' 6"
Footing length	1' 6"
Footing depth	10"
Column width	8"
Column length	8"
Pedestal height	4"
Pedestal width	4"
Pedestal length	4"

Footing Properties	
Steel yield strength	60,000 psi
Concrete strength	3,000 psi
Soil bearing pressure	1,500 psf
Concrete density	145 pcf
Top reinf. cover	3"
Bottom reinf. cover	3"
Side reinf. cover	3"
Aggregate diameter	3/4"

Soil Properties	
Soil depth above footing	0
Soil density	140 pcf
Soil cohesion	0 psf
Friction angle	30°
Water level	0

Reinforcement	
Bottom mat	Bot.(2) #4 Long, (2) #4 Short
Bars the long way	(2) #4
Bars the short way	(2) #4
Selected for	moment and minimum steel
Plain concrete (no reinforcing)	No
Override rebar	No
Include water level	No
Allow bearing pressure increase	No

- Soil bearing is checked at service level (ASD) and includes the footing's own weight; shear, moment and crushing at strength level (LRFD), ACI 318-14, loads combined to ASCE 7-16.
- Reinforcement is selected for the moment and for minimum steel (ACI 318-14: 0.0018 Ag for Grade 60), at no more than 3h or 18 in.

Applied Loads	Location	Trib. Width	Dead (0.90)	Snow (1.15)	Comments
1 - Point (lb)	--	N/A	329.2	2,642	Linked from: Beam #27, Support 2

SpotFtg Bm #28-1

Spot Footing 3' x 3' x 10" deep -- Bot.(4) #4 Long, (4) #4 Short

Level: Foundation | f'c 3,000 psi | rebar Fy 60 ksi | soil 1,500 psf | Concrete column 8" x 8" | ACI 318-14

PASSED

Controls: Depth Above Bars 89% used

Adequacy 21.7% (capacity to spare)

WHAT LOADS IT

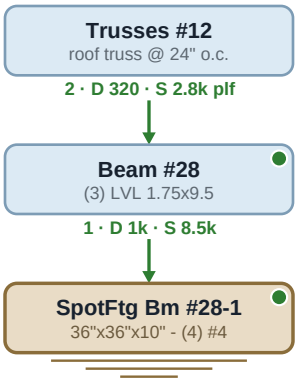

SECTION

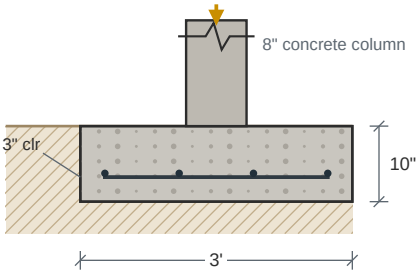

PLAN -- BOTTOM MAT

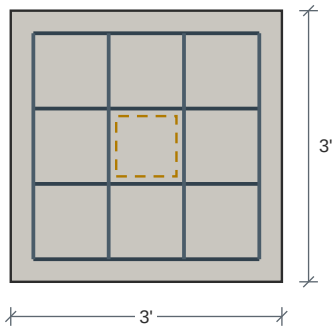

Bot.(4) #4 Long, (4) #4 Short

Carrying: Dead 1,004 lb Snow 8,478 lb

Design Results	Actual	Allowed	Result	Method	Load Combination
Soil Bearing Pressure (psf)	1,174	1,500	Passed (78% used)	ASD	D+S
One-Way Shear X (lbs)	3,180	18,486	Passed (17% used)	LRFD	1.2D+1.6S+L
One-Way Shear Y (lbs)	3,180	18,486	Passed (17% used)	LRFD	1.2D+1.6S+L
Two-Way Shear (lbs)	12,374	61,947	Passed (20% used)	LRFD	1.2D+1.6S+L
Moment X (ft-lbs)	3,351	21,559	Passed (16% used)	LRFD	1.2D+1.6S+L
Moment Y (ft-lbs)	3,351	21,559	Passed (16% used)	LRFD	1.2D+1.6S+L
Crushing (lbs)	14,770	212,160	Passed (7% used)	LRFD	1.2D+1.6S+L
Depth Above Bars (in)	6	7	Passed (89% used)	code	ACI 318-14 13.3.1.2

Footing Specification

as entered on the footing, and the mat the check selected

Geometry	
Shape	Square
Column type	Concrete
Footing width	3'
Footing length	3'
Footing depth	10"
Column width	8"
Column length	8"
Pedestal height	4"
Pedestal width	4"
Pedestal length	4"

Footing Properties	
Steel yield strength	60,000 psi
Concrete strength	3,000 psi
Soil bearing pressure	1,500 psf
Concrete density	145 pcf
Top reinf. cover	3"
Bottom reinf. cover	3"
Side reinf. cover	3"
Aggregate diameter	3/4"

Soil Properties	
Soil depth above footing	0
Soil density	140 pcf
Soil cohesion	0 psf
Friction angle	30°
Water level	0

Reinforcement	
Bottom mat	Bot.(4) #4 Long, (4) #4 Short
Bars the long way	(4) #4
Bars the short way	(4) #4
Selected for	moment and minimum steel
Plain concrete (no reinforcing)	No
Override rebar	No
Include water level	No
Allow bearing pressure increase	No

- Soil bearing is checked at service level (ASD) and includes the footing's own weight; shear, moment and crushing at strength level (LRFD), ACI 318-14, loads combined to ASCE 7-16.
- Reinforcement is selected for the moment and for minimum steel (ACI 318-14: 0.0018 Ag for Grade 60), at no more than 3h or 18 in.

Applied Loads	Location	Trib. Width	Dead (0.90)	Snow (1.15)	Comments
1 - Point (lb)	--	N/A	1,004	8,478	Linked from: Beam #28, Support 1

SpotFtg Bm #28-2

Spot Footing 3' x 3' x 10" deep -- Bot.(4) #4 Long, (4) #4 Short

Level: Foundation | f'c 3,000 psi | rebar Fy 60 ksi | soil 1,500 psf | Concrete column 8" x 8" | ACI 318-14

PASSED

Controls: Depth Above Bars 89% used

Adequacy 21.7% (capacity to spare)

WHAT LOADS IT

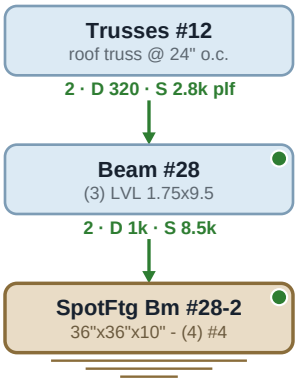

SECTION

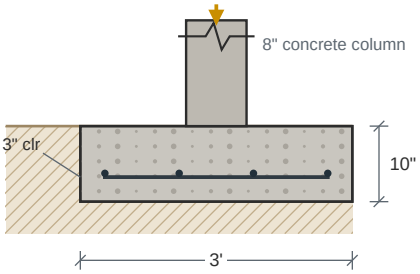

PLAN -- BOTTOM MAT

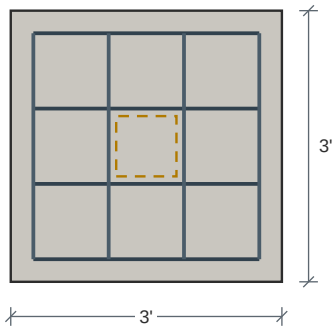

Bot.(4) #4 Long, (4) #4 Short

Carrying: Dead 1,004 lb Snow 8,478 lb

Design Results	Actual	Allowed	Result	Method	Load Combination
Soil Bearing Pressure (psf)	1,174	1,500	Passed (78% used)	ASD	D+S
One-Way Shear X (lbs)	3,180	18,486	Passed (17% used)	LRFD	1.2D+1.6S+L
One-Way Shear Y (lbs)	3,180	18,486	Passed (17% used)	LRFD	1.2D+1.6S+L
Two-Way Shear (lbs)	12,374	61,947	Passed (20% used)	LRFD	1.2D+1.6S+L
Moment X (ft-lbs)	3,351	21,559	Passed (16% used)	LRFD	1.2D+1.6S+L
Moment Y (ft-lbs)	3,351	21,559	Passed (16% used)	LRFD	1.2D+1.6S+L
Crushing (lbs)	14,770	212,160	Passed (7% used)	LRFD	1.2D+1.6S+L
Depth Above Bars (in)	6	7	Passed (89% used)	code	ACI 318-14 13.3.1.2

Footing Specification

as entered on the footing, and the mat the check selected

Geometry	
Shape	Square
Column type	Concrete
Footing width	3'
Footing length	3'
Footing depth	10"
Column width	8"
Column length	8"
Pedestal height	4"
Pedestal width	4"
Pedestal length	4"

Footing Properties	
Steel yield strength	60,000 psi
Concrete strength	3,000 psi
Soil bearing pressure	1,500 psf
Concrete density	145 pcf
Top reinf. cover	3"
Bottom reinf. cover	3"
Side reinf. cover	3"
Aggregate diameter	3/4"

Soil Properties	
Soil depth above footing	0
Soil density	140 pcf
Soil cohesion	0 psf
Friction angle	30°
Water level	0

Reinforcement	
Bottom mat	Bot.(4) #4 Long, (4) #4 Short
Bars the long way	(4) #4
Bars the short way	(4) #4
Selected for	moment and minimum steel
Plain concrete (no reinforcing)	No
Override rebar	No
Include water level	No
Allow bearing pressure increase	No

- Soil bearing is checked at service level (ASD) and includes the footing's own weight; shear, moment and crushing at strength level (LRFD), ACI 318-14, loads combined to ASCE 7-16.
- Reinforcement is selected for the moment and for minimum steel (ACI 318-14: 0.0018 Ag for Grade 60), at no more than 3h or 18 in.

Applied Loads	Location	Trib. Width	Dead (0.90)	Snow (1.15)	Comments
1 - Point (lb)	--	N/A	1,004	8,478	Linked from: Beam #28, Support 2

SpotFtg Bm #29-1

PASSED

Spot Footing 2' x 2' x 10" deep -- Bot.(3) #4 Long, (3) #4 Short

Level: Foundation | f'c 3,000 psi | rebar Fy 60 ksi | soil 1,500 psf | Concrete column 8" x 8" | ACI 318-14

Controls: Soil Bearing Pressure 97% used
Adequacy 2.7% (capacity to spare)

WHAT LOADS IT

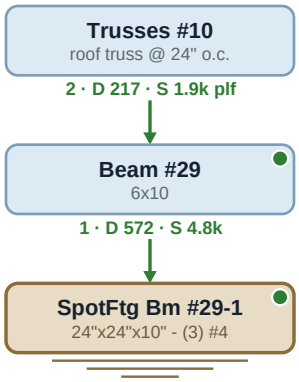

SECTION

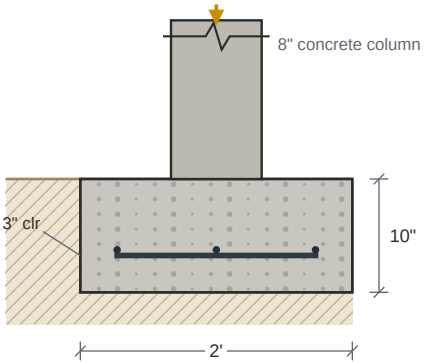

PLAN -- BOTTOM MAT

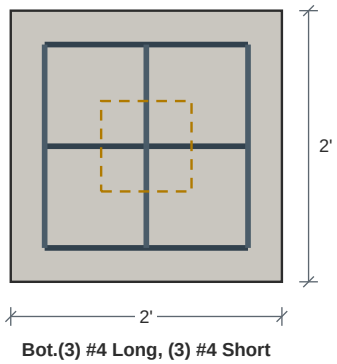

Bot.(3) #4 Long, (3) #4 Short

Carrying: Dead 572 lb Snow 4,781 lb

Design Results	Actual	Allowed	Result	Method	Load Combination
Soil Bearing Pressure (psf)	1,459	1,500	Passed (97% used)	ASD	D+S
One-Way Shear X (lbs)	608	12,324	Passed (5% used)	LRFD	1.2D+1.6S+L
One-Way Shear Y (lbs)	608	12,324	Passed (5% used)	LRFD	1.2D+1.6S+L
Two-Way Shear (lbs)	5,293	61,947	Passed (9% used)	LRFD	1.2D+1.6S+L
Moment X (ft-lbs)	926	16,081	Passed (6% used)	LRFD	1.2D+1.6S+L
Moment Y (ft-lbs)	926	16,081	Passed (6% used)	LRFD	1.2D+1.6S+L
Crushing (lbs)	8,336	212,160	Passed (4% used)	LRFD	1.2D+1.6S+L
Depth Above Bars (in)	6	7	Passed (89% used)	code	ACI 318-14 13.3.1.2

Footing Specification

as entered on the footing, and the mat the check selected

Geometry	
Shape	Square
Column type	Concrete
Footing width	2'
Footing length	2'
Footing depth	10"
Column width	8"
Column length	8"
Pedestal height	4"
Pedestal width	4"
Pedestal length	4"

Footing Properties	
Steel yield strength	60,000 psi
Concrete strength	3,000 psi
Soil bearing pressure	1,500 psf
Concrete density	145 pcf
Top reinf. cover	3"
Bottom reinf. cover	3"
Side reinf. cover	3"
Aggregate diameter	3/4"

Soil Properties	
Soil depth above footing	0
Soil density	140 pcf
Soil cohesion	0 psf
Friction angle	30°
Water level	0

Reinforcement	
Bottom mat	Bot.(3) #4 Long, (3) #4 Short
Bars the long way	(3) #4
Bars the short way	(3) #4
Selected for	moment and minimum steel
Plain concrete (no reinforcing)	No
Override rebar	No
Include water level	No
Allow bearing pressure increase	No

- Soil bearing is checked at service level (ASD) and includes the footing's own weight; shear, moment and crushing at strength level (LRFD), ACI 318-14, loads combined to ASCE 7-16.
- Reinforcement is selected for the moment and for minimum steel (ACI 318-14: 0.0018 Ag for Grade 60), at no more than 3h or 18 in.

Applied Loads	Location	Trib. Width	Dead (0.90)	Snow (1.15)	Comments
1 - Point (lb)	--	N/A	571.6	4,781	Linked from: Beam #29, Support 1

SpotFtg Bm #29-2

PASSED

Spot Footing 2' x 2' x 10" deep -- Bot.(3) #4 Long, (3) #4 Short

Level: Foundation | f'c 3,000 psi | rebar Fy 60 ksi | soil 1,500 psf | Concrete column 8" x 8" | ACI 318-14

Controls: Soil Bearing Pressure 97% used
Adequacy 2.7% (capacity to spare)

WHAT LOADS IT

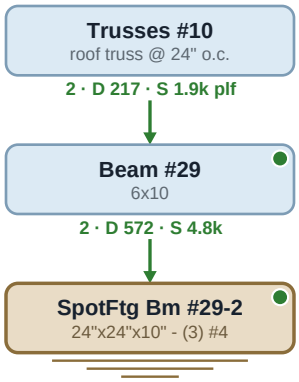

SECTION

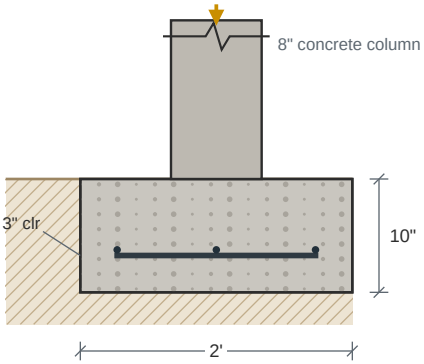

PLAN -- BOTTOM MAT

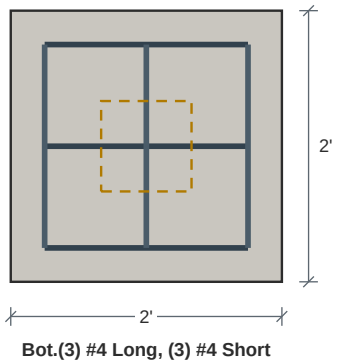

Bot.(3) #4 Long, (3) #4 Short

Carrying: Dead 572 lb Snow 4,781 lb

Design Results	Actual	Allowed	Result	Method	Load Combination
Soil Bearing Pressure (psf)	1,459	1,500	Passed (97% used)	ASD	D+S
One-Way Shear X (lbs)	608	12,324	Passed (5% used)	LRFD	1.2D+1.6S+L
One-Way Shear Y (lbs)	608	12,324	Passed (5% used)	LRFD	1.2D+1.6S+L
Two-Way Shear (lbs)	5,293	61,947	Passed (9% used)	LRFD	1.2D+1.6S+L
Moment X (ft-lbs)	926	16,081	Passed (6% used)	LRFD	1.2D+1.6S+L
Moment Y (ft-lbs)	926	16,081	Passed (6% used)	LRFD	1.2D+1.6S+L
Crushing (lbs)	8,336	212,160	Passed (4% used)	LRFD	1.2D+1.6S+L
Depth Above Bars (in)	6	7	Passed (89% used)	code	ACI 318-14 13.3.1.2

Footing Specification

as entered on the footing, and the mat the check selected

Geometry	
Shape	Square
Column type	Concrete
Footing width	2'
Footing length	2'
Footing depth	10"
Column width	8"
Column length	8"
Pedestal height	4"
Pedestal width	4"
Pedestal length	4"

Footing Properties	
Steel yield strength	60,000 psi
Concrete strength	3,000 psi
Soil bearing pressure	1,500 psf
Concrete density	145 pcf
Top reinf. cover	3"
Bottom reinf. cover	3"
Side reinf. cover	3"
Aggregate diameter	3/4"

Soil Properties	
Soil depth above footing	0
Soil density	140 pcf
Soil cohesion	0 psf
Friction angle	30°
Water level	0

Reinforcement	
Bottom mat	Bot.(3) #4 Long, (3) #4 Short
Bars the long way	(3) #4
Bars the short way	(3) #4
Selected for	moment and minimum steel
Plain concrete (no reinforcing)	No
Override rebar	No
Include water level	No
Allow bearing pressure increase	No

- Soil bearing is checked at service level (ASD) and includes the footing's own weight; shear, moment and crushing at strength level (LRFD), ACI 318-14, loads combined to ASCE 7-16.
- Reinforcement is selected for the moment and for minimum steel (ACI 318-14: 0.0018 Ag for Grade 60), at no more than 3h or 18 in.

Applied Loads	Location	Trib. Width	Dead (0.90)	Snow (1.15)	Comments
1 - Point (lb)	--	N/A	571.6	4,781	Linked from: Beam #29, Support 2

SpotFtg Gdr #1-1

Spot Footing 2' 6" x 2' 6" x 10" deep -- Bot.(3) #4 Long, (3) #4 Short

Level: Foundation | f'c 3,000 psi | rebar Fy 60 ksi | soil 1,500 psf | Concrete column 8" x 8" | ACI 318-14

PASSED

Controls: Soil Bearing Pressure 93% used

Adequacy 7.3% (capacity to spare)

WHAT LOADS IT

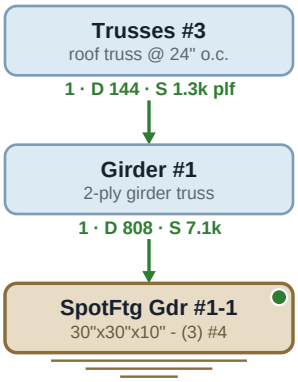

SECTION

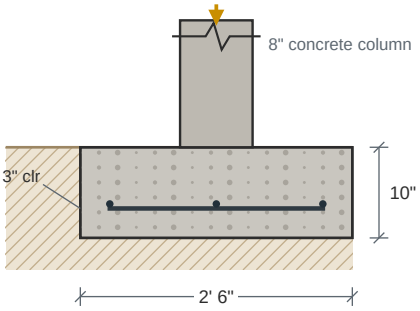

PLAN -- BOTTOM MAT

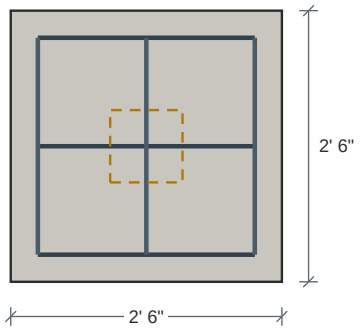

Bot.(3) #4 Long, (3) #4 Short

Carrying: Dead 808 lb Snow 7,125 lb

Design Results	Actual	Allowed	Result	Method	Load Combination
Soil Bearing Pressure (psf)	1,390	1,500	Passed (93% used)	ASD	D+S
One-Way Shear X (lbs)	1,958	15,405	Passed (13% used)	LRFD	1.2D+1.6S+L
One-Way Shear Y (lbs)	1,958	15,405	Passed (13% used)	LRFD	1.2D+1.6S+L
Two-Way Shear (lbs)	9,479	61,947	Passed (15% used)	LRFD	1.2D+1.6S+L
Moment X (ft-lbs)	2,079	16,240	Passed (13% used)	LRFD	1.2D+1.6S+L
Moment Y (ft-lbs)	2,079	16,240	Passed (13% used)	LRFD	1.2D+1.6S+L
Crushing (lbs)	12,369	212,160	Passed (6% used)	LRFD	1.2D+1.6S+L
Depth Above Bars (in)	6	7	Passed (89% used)	code	ACI 318-14 13.3.1.2

Footing Specification

as entered on the footing, and the mat the check selected

Geometry	
Shape	Square
Column type	Concrete
Footing width	2' 6"
Footing length	2' 6"
Footing depth	10"
Column width	8"
Column length	8"
Pedestal height	4"
Pedestal width	4"
Pedestal length	4"

Footing Properties	
Steel yield strength	60,000 psi
Concrete strength	3,000 psi
Soil bearing pressure	1,500 psf
Concrete density	145 pcf
Top reinf. cover	3"
Bottom reinf. cover	3"
Side reinf. cover	3"
Aggregate diameter	3/4"

Soil Properties and Post	
Soil depth above footing	0
Soil density	140 pcf
Soil cohesion	0 psf
Friction angle	30°
Water level	0
Post	6x6 post (assumed)
Post base	ABU66Z, p. 76
Cap	truss layout

Reinforcement	
Bottom mat	Bot.(3) #4 Long, (3) #4 Short
Bars the long way	(3) #4
Bars the short way	(3) #4
Selected for	moment and minimum steel
Plain concrete (no reinforcing)	No
Override rebar	No
Include water level	No
Allow bearing pressure increase	No

- Soil bearing is checked at service level (ASD) and includes the footing's own weight; shear, moment and crushing at strength level (LRFD), ACI 318-14, loads combined to ASCE 7-16.
- Reinforcement is selected for the moment and for minimum steel (ACI 318-14: 0.0018 Ag for Grade 60), at no more than 3h or 18 in.

Applied Loads	Location	Trib. Width	Dead (0.90)	Snow (1.15)	Comments
1 - Point (lb)	--	N/A	807.5	7,125	Linked from: Girder #1, Support 1

SpotFtg Gdr #1-2

Spot Footing 2' 6" x 2' 6" x 10" deep -- Bot.(3) #4 Long, (3) #4 Short

Level: Foundation | f'c 3,000 psi | rebar Fy 60 ksi | soil 1,500 psf | Concrete column 8" x 8" | ACI 318-14

PASSED

Controls: Soil Bearing Pressure 93% used
Adequacy 7.3% (capacity to spare)

WHAT LOADS IT

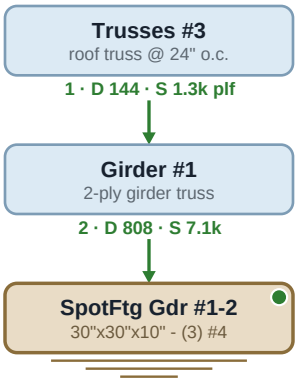

SECTION

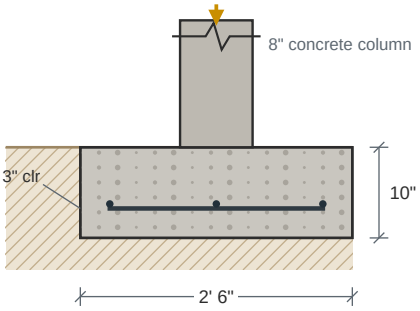

PLAN -- BOTTOM MAT

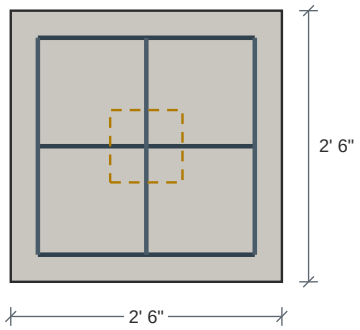

Bot.(3) #4 Long, (3) #4 Short

Carrying: Dead 808 lb Snow 7,125 lb

Design Results	Actual	Allowed	Result	Method	Load Combination
Soil Bearing Pressure (psf)	1,390	1,500	Passed (93% used)	ASD	D+S
One-Way Shear X (lbs)	1,958	15,405	Passed (13% used)	LRFD	1.2D+1.6S+L
One-Way Shear Y (lbs)	1,958	15,405	Passed (13% used)	LRFD	1.2D+1.6S+L
Two-Way Shear (lbs)	9,479	61,947	Passed (15% used)	LRFD	1.2D+1.6S+L
Moment X (ft-lbs)	2,079	16,240	Passed (13% used)	LRFD	1.2D+1.6S+L
Moment Y (ft-lbs)	2,079	16,240	Passed (13% used)	LRFD	1.2D+1.6S+L
Crushing (lbs)	12,369	212,160	Passed (6% used)	LRFD	1.2D+1.6S+L
Depth Above Bars (in)	6	7	Passed (89% used)	code	ACI 318-14 13.3.1.2

Footing Specification

as entered on the footing, and the mat the check selected

Geometry	
Shape	Square
Column type	Concrete
Footing width	2' 6"
Footing length	2' 6"
Footing depth	10"
Column width	8"
Column length	8"
Pedestal height	4"
Pedestal width	4"
Pedestal length	4"

Footing Properties	
Steel yield strength	60,000 psi
Concrete strength	3,000 psi
Soil bearing pressure	1,500 psf
Concrete density	145 pcf
Top reinf. cover	3"
Bottom reinf. cover	3"
Side reinf. cover	3"
Aggregate diameter	3/4"

Soil Properties and Post	
Soil depth above footing	0
Soil density	140 pcf
Soil cohesion	0 psf
Friction angle	30°
Water level	0
Post	6x6 post (assumed)
Post base	ABU66Z, p. 76
Cap	truss layout

Reinforcement	
Bottom mat	Bot.(3) #4 Long, (3) #4 Short
Bars the long way	(3) #4
Bars the short way	(3) #4
Selected for	moment and minimum steel
Plain concrete (no reinforcing)	No
Override rebar	No
Include water level	No
Allow bearing pressure increase	No

- Soil bearing is checked at service level (ASD) and includes the footing's own weight; shear, moment and crushing at strength level (LRFD), ACI 318-14, loads combined to ASCE 7-16.
- Reinforcement is selected for the moment and for minimum steel (ACI 318-14: 0.0018 Ag for Grade 60), at no more than 3h or 18 in.

Applied Loads	Location	Trib. Width	Dead (0.90)	Snow (1.15)	Comments
1 - Point (lb)	--	N/A	807.5	7,125	Linked from: Girder #1, Support 2

SpotFtg Hdr #6-1

PASSED

Spot Footing 3' x 4' 6" x 10" deep -- Bot.(6) #4 Long, (4) #4 Short - 4 of the Long in the center 3 ft

Controls: Depth Above Bars 89% used
Adequacy 19.4% (capacity to spare)

Level: Foundation | f'c 3,000 psi | rebar Fy 60 ksi | soil 1,500 psf | Concrete column 8" x 8" | ACI 318-14

WHAT LOADS IT

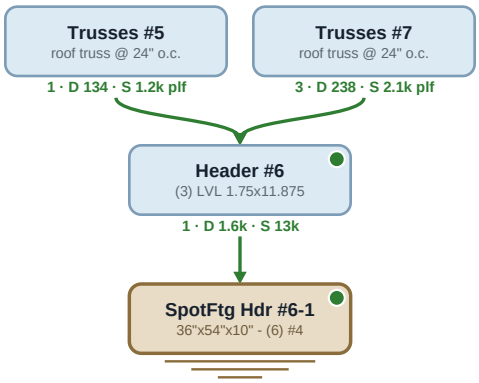

SECTION

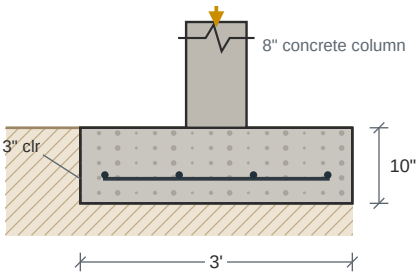

PLAN -- BOTTOM MAT

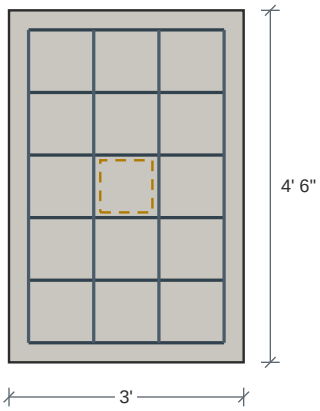

Bot.(6) #4 Long, (4) #4 Short - 4 of the Long in the center 3 ft

Carrying: Dead 1,560 lb Snow 13,125 lb

Design Results	Actual	Allowed	Result	Method	Load Combination
Soil Bearing Pressure (psf)	1,209	1,500	Passed (81% used)	ASD	D+S
One-Way Shear X (lbs)	7,095	18,486	Passed (38% used)	LRFD	1.2D+1.6S+L
One-Way Shear Y (lbs)	4,924	27,728	Passed (18% used)	LRFD	1.2D+1.6S+L
Two-Way Shear (lbs)	20,399	61,947	Passed (33% used)	LRFD	1.2D+1.6S+L
Moment X (ft-lbs)	9,336	21,559	Passed (43% used)	LRFD	1.2D+1.6S+L
Moment Y (ft-lbs)	5,189	32,338	Passed (16% used)	LRFD	1.2D+1.6S+L
Crushing (lbs)	22,872	212,160	Passed (11% used)	LRFD	1.2D+1.6S+L
Depth Above Bars (in)	6	7	Passed (89% used)	code	ACI 318-14 13.3.1.2

Footing Specification

as entered on the footing, and the mat the check selected

Geometry	
Shape	Square
Column type	Concrete
Footing width	3'
Footing length	4' 6"
Footing depth	10"
Column width	8"
Column length	8"
Pedestal height	4"
Pedestal width	4"
Pedestal length	4"

Footing Properties	
Steel yield strength	60,000 psi
Concrete strength	3,000 psi
Soil bearing pressure	1,500 psf
Concrete density	145 pcf
Top reinf. cover	3"
Bottom reinf. cover	3"
Side reinf. cover	3"
Aggregate diameter	3/4"

Soil Properties	
Soil depth above footing	0
Soil density	140 pcf
Soil cohesion	0 psf
Friction angle	30°
Water level	0

Reinforcement	
Bottom mat	Bot.(6) #4 Long, (4) #4 Short - 4 of the Long in
Bars the long way	(6) #4
Bars the short way	(4) #4
Selected for	moment and minimum steel
Plain concrete (no reinforcing)	No
Override rebar	No
Include water level	No
Allow bearing pressure increase	No

- Soil bearing is checked at service level (ASD) and includes the footing's own weight; shear, moment and crushing at strength level (LRFD), ACI 318-14, loads combined to ASCE 7-16.
- Reinforcement is selected for the moment and for minimum steel (ACI 318-14: 0.0018 Ag for Grade 60), at no more than 3h or 18 in.

SpotFtg Hdr #6-1 (continued)

Spot Footing | 3' x 4' 6" x 10" deep -- Bot.(6) #4 Long, (4) #4 Short - 4 of the Long in the center 3 ft

Applied Loads	Location	Trib. Width	Dead (0.90)	Snow (1.15)	Comments
1 - Point (lb)	--	N/A	1,560	13,125	Linked from: Header #6, Support 1

SpotFtg Hdr #6-2

PASSED

Spot Footing 3' x 4' 6" x 10" deep -- Bot.(6) #4 Long, (4) #4 Short - 4 of the Long in the center 3 ft

Controls: Depth Above Bars 89% used
Adequacy 19.4% (capacity to spare)

Level: Foundation | f'c 3,000 psi | rebar Fy 60 ksi | soil 1,500 psf | Concrete column 8" x 8" | ACI 318-14

WHAT LOADS IT

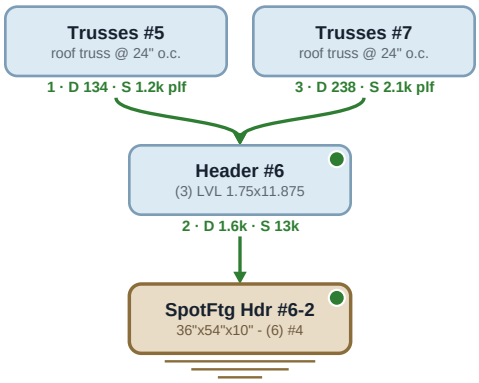

SECTION

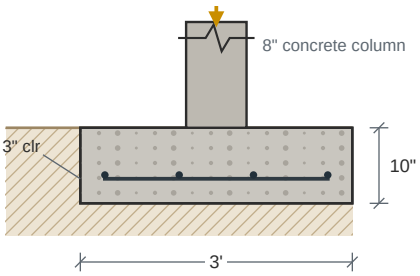

PLAN -- BOTTOM MAT

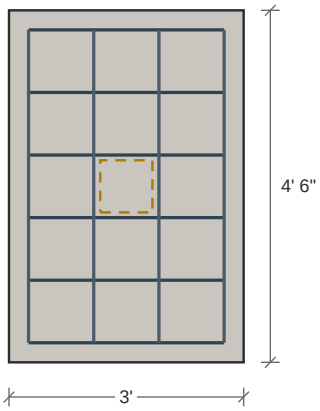

Bot.(6) #4 Long, (4) #4 Short - 4 of the Long in the center 3 ft

Carrying: Dead 1,560 lb Snow 13,125 lb

Design Results	Actual	Allowed	Result	Method	Load Combination
Soil Bearing Pressure (psf)	1,209	1,500	Passed (81% used)	ASD	D+S
One-Way Shear X (lbs)	7,095	18,486	Passed (38% used)	LRFD	1.2D+1.6S+L
One-Way Shear Y (lbs)	4,924	27,728	Passed (18% used)	LRFD	1.2D+1.6S+L
Two-Way Shear (lbs)	20,399	61,947	Passed (33% used)	LRFD	1.2D+1.6S+L
Moment X (ft-lbs)	9,336	21,559	Passed (43% used)	LRFD	1.2D+1.6S+L
Moment Y (ft-lbs)	5,189	32,338	Passed (16% used)	LRFD	1.2D+1.6S+L
Crushing (lbs)	22,872	212,160	Passed (11% used)	LRFD	1.2D+1.6S+L
Depth Above Bars (in)	6	7	Passed (89% used)	code	ACI 318-14 13.3.1.2

Footing Specification

as entered on the footing, and the mat the check selected

Geometry	
Shape	Square
Column type	Concrete
Footing width	3'
Footing length	4' 6"
Footing depth	10"
Column width	8"
Column length	8"
Pedestal height	4"
Pedestal width	4"
Pedestal length	4"

Footing Properties	
Steel yield strength	60,000 psi
Concrete strength	3,000 psi
Soil bearing pressure	1,500 psf
Concrete density	145 pcf
Top reinf. cover	3"
Bottom reinf. cover	3"
Side reinf. cover	3"
Aggregate diameter	3/4"

Soil Properties	
Soil depth above footing	0
Soil density	140 pcf
Soil cohesion	0 psf
Friction angle	30°
Water level	0

Reinforcement	
Bottom mat	Bot.(6) #4 Long, (4) #4 Short - 4 of the Long in
Bars the long way	(6) #4
Bars the short way	(4) #4
Selected for	moment and minimum steel
Plain concrete (no reinforcing)	No
Override rebar	No
Include water level	No
Allow bearing pressure increase	No

- Soil bearing is checked at service level (ASD) and includes the footing's own weight; shear, moment and crushing at strength level (LRFD), ACI 318-14, loads combined to ASCE 7-16.
- Reinforcement is selected for the moment and for minimum steel (ACI 318-14: 0.0018 Ag for Grade 60), at no more than 3h or 18 in.

SpotFtg Hdr #6-2 (continued)

Spot Footing | 3' x 4' 6" x 10" deep -- Bot.(6) #4 Long, (4) #4 Short - 4 of the Long in the center 3 ft

Applied Loads	Location	Trib. Width	Dead (0.90)	Snow (1.15)	Comments
1 - Point (lb)	--	N/A	1,560	13,125	Linked from: Header #6, Support 2

SpotFtg Hdr #7-1

PASSED

Spot Footing 2' 6" x 4' 6" x 10" deep -- Bot.(6) #4 Long, (3) #4 Short - 4 of the Long in the center 2.5 ft

Controls: Depth Above Bars 89% used
Adequacy 26.9% (capacity to spare)

Level: Foundation | f'c 3,000 psi | rebar Fy 60 ksi | soil 1,500 psf | Concrete column 8" x 8" | ACI 318-14

WHAT LOADS IT

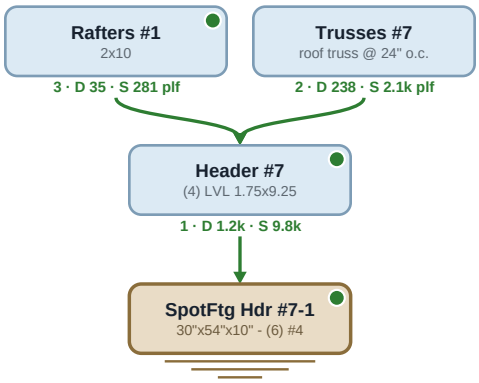

SECTION

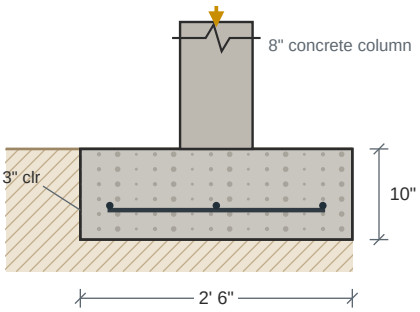

PLAN -- BOTTOM MAT

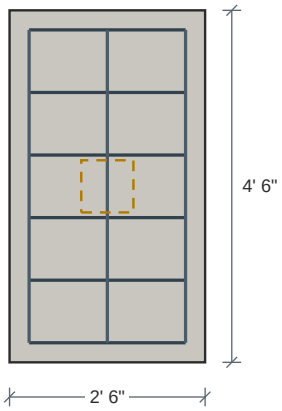

Bot.(6) #4 Long, (3) #4 Short - 4 of the Long in the center 2.5 ft

Carrying: Dead 1,200 lb Snow 9,774 lb

Design Results	Actual	Allowed	Result	Method	Load Combination
Soil Bearing Pressure (psf)	1,096	1,500	Passed (73% used)	ASD	D+S
One-Way Shear X (lbs)	5,297	15,405	Passed (34% used)	LRFD	1.2D+1.6S+L
One-Way Shear Y (lbs)	2,704	27,728	Passed (10% used)	LRFD	1.2D+1.6S+L
Two-Way Shear (lbs)	14,862	61,947	Passed (24% used)	LRFD	1.2D+1.6S+L
Moment X (ft-lbs)	6,971	16,240	Passed (43% used)	LRFD	1.2D+1.6S+L
Moment Y (ft-lbs)	2,870	32,338	Passed (9% used)	LRFD	1.2D+1.6S+L
Crushing (lbs)	17,078	212,160	Passed (8% used)	LRFD	1.2D+1.6S+L
Depth Above Bars (in)	6	7	Passed (89% used)	code	ACI 318-14 13.3.1.2

Footing Specification

as entered on the footing, and the mat the check selected

Geometry	
Shape	Square
Column type	Concrete
Footing width	2' 6"
Footing length	4' 6"
Footing depth	10"
Column width	8"
Column length	8"
Pedestal height	4"
Pedestal width	4"
Pedestal length	4"

Footing Properties	
Steel yield strength	60,000 psi
Concrete strength	3,000 psi
Soil bearing pressure	1,500 psf
Concrete density	145 pcf
Top reinf. cover	3"
Bottom reinf. cover	3"
Side reinf. cover	3"
Aggregate diameter	3/4"

Soil Properties	
Soil depth above footing	0
Soil density	140 pcf
Soil cohesion	0 psf
Friction angle	30°
Water level	0

Reinforcement	
Bottom mat	Bot.(6) #4 Long, (3) #4 Short - 4 of the Long in
Bars the long way	(6) #4
Bars the short way	(3) #4
Selected for	moment and minimum steel
Plain concrete (no reinforcing)	No
Override rebar	No
Include water level	No
Allow bearing pressure increase	No

- Soil bearing is checked at service level (ASD) and includes the footing's own weight; shear, moment and crushing at strength level (LRFD), ACI 318-14, loads combined to ASCE 7-16.
- Reinforcement is selected for the moment and for minimum steel (ACI 318-14: 0.0018 Ag for Grade 60), at no more than 3h or 18 in.

SpotFtg Hdr #7-1 (continued)

Spot Footing | 2' 6" x 4' 6" x 10" deep -- Bot.(6) #4 Long, (3) #4 Short - 4 of the Long in the center 2.5 ft

Applied Loads	Location	Trib. Width	Dead (0.90)	Snow (1.15)	Comments
1 - Point (lb)	--	N/A	1,200	9,774	Linked from: Header #7, Support 1

SpotFtg Hdr #7-2

PASSED

Spot Footing 2' 6" x 4' 6" x 10" deep -- Bot.(6) #4 Long, (3) #4 Short - 4 of the Long in the center 2.5 ft

Controls: Depth Above Bars 89% used
Adequacy 26.9% (capacity to spare)

Level: Foundation | f'c 3,000 psi | rebar Fy 60 ksi | soil 1,500 psf | Concrete column 8" x 8" | ACI 318-14

WHAT LOADS IT

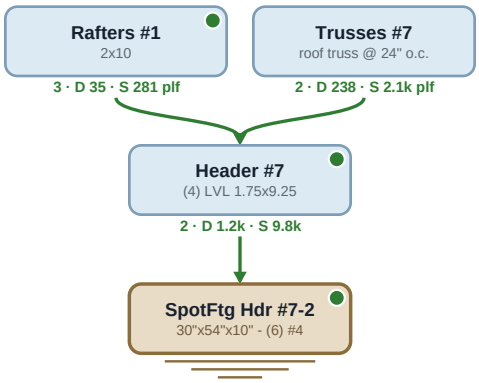

SECTION

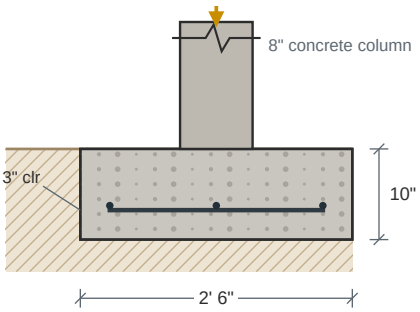

PLAN -- BOTTOM MAT

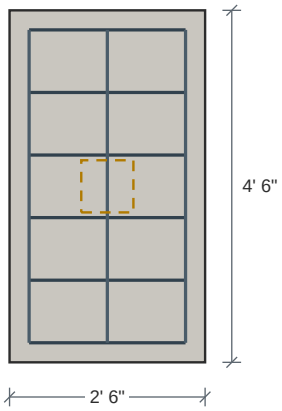

Bot.(6) #4 Long, (3) #4 Short - 4 of the Long in the center 2.5 ft

Carrying: Dead 1,200 lb Snow 9,774 lb

Design Results	Actual	Allowed	Result	Method	Load Combination
Soil Bearing Pressure (psf)	1,096	1,500	Passed (73% used)	ASD	D+S
One-Way Shear X (lbs)	5,297	15,405	Passed (34% used)	LRFD	1.2D+1.6S+L
One-Way Shear Y (lbs)	2,704	27,728	Passed (10% used)	LRFD	1.2D+1.6S+L
Two-Way Shear (lbs)	14,862	61,947	Passed (24% used)	LRFD	1.2D+1.6S+L
Moment X (ft-lbs)	6,971	16,240	Passed (43% used)	LRFD	1.2D+1.6S+L
Moment Y (ft-lbs)	2,870	32,338	Passed (9% used)	LRFD	1.2D+1.6S+L
Crushing (lbs)	17,078	212,160	Passed (8% used)	LRFD	1.2D+1.6S+L
Depth Above Bars (in)	6	7	Passed (89% used)	code	ACI 318-14 13.3.1.2

Footing Specification

as entered on the footing, and the mat the check selected

Geometry	
Shape	Square
Column type	Concrete
Footing width	2' 6"
Footing length	4' 6"
Footing depth	10"
Column width	8"
Column length	8"
Pedestal height	4"
Pedestal width	4"
Pedestal length	4"

Footing Properties	
Steel yield strength	60,000 psi
Concrete strength	3,000 psi
Soil bearing pressure	1,500 psf
Concrete density	145 pcf
Top reinf. cover	3"
Bottom reinf. cover	3"
Side reinf. cover	3"
Aggregate diameter	3/4"

Soil Properties	
Soil depth above footing	0
Soil density	140 pcf
Soil cohesion	0 psf
Friction angle	30°
Water level	0

Reinforcement	
Bottom mat	Bot.(6) #4 Long, (3) #4 Short - 4 of the Long in
Bars the long way	(6) #4
Bars the short way	(3) #4
Selected for	moment and minimum steel
Plain concrete (no reinforcing)	No
Override rebar	No
Include water level	No
Allow bearing pressure increase	No

- Soil bearing is checked at service level (ASD) and includes the footing's own weight; shear, moment and crushing at strength level (LRFD), ACI 318-14, loads combined to ASCE 7-16.
- Reinforcement is selected for the moment and for minimum steel (ACI 318-14: 0.0018 Ag for Grade 60), at no more than 3h or 18 in.

SpotFtg Hdr #7-2 (continued)

Spot Footing | 2' 6" x 4' 6" x 10" deep -- Bot.(6) #4 Long, (3) #4 Short - 4 of the Long in the center 2.5 ft

Applied Loads	Location	Trib. Width	Dead (0.90)	Snow (1.15)	Comments
1 - Point (lb)	--	N/A	1,200	9,774	Linked from: Header #7, Support 2

SpotFtg Hdr #8-1

Spot Footing 5' x 5' x 10" deep -- Bot.(6) #4 Long, (6) #4 Short

Level: Foundation | f'c 3,000 psi | rebar Fy 60 ksi | soil 1,500 psf | Concrete column 8" x 8" | ACI 318-14

PASSED

Controls: Soil Bearing Pressure 89% used

Adequacy 10.8% (capacity to spare)

WHAT LOADS IT

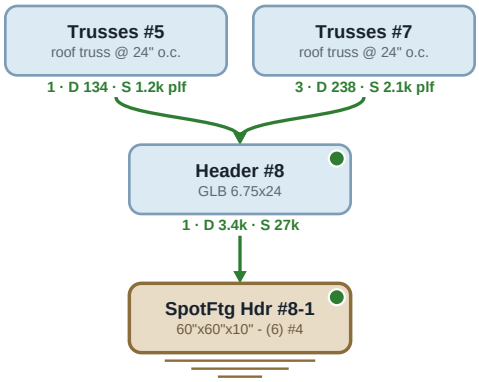

SECTION

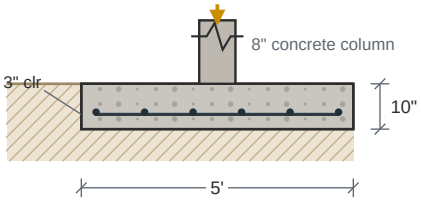

PLAN -- BOTTOM MAT

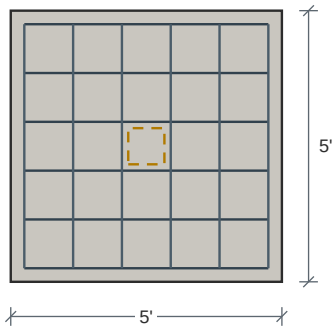

Bot.(6) #4 Long, (6) #4 Short

Carrying: Dead 3,372 lb Snow 27,070 lb

Design Results	Actual	Allowed	Result	Method	Load Combination
Soil Bearing Pressure (psf)	1,339	1,500	Passed (89% used)	ASD	D+S
One-Way Shear X (lbs)	15,589	30,809	Passed (51% used)	LRFD	1.2D+1.6S+L
One-Way Shear Y (lbs)	15,589	30,809	Passed (51% used)	LRFD	1.2D+1.6S+L
Two-Way Shear (lbs)	44,593	61,947	Passed (72% used)	LRFD	1.2D+1.6S+L
Moment X (ft-lbs)	22,233	32,479	Passed (68% used)	LRFD	1.2D+1.6S+L
Moment Y (ft-lbs)	22,233	32,479	Passed (68% used)	LRFD	1.2D+1.6S+L
Crushing (lbs)	47,359	212,160	Passed (22% used)	LRFD	1.2D+1.6S+L
Depth Above Bars (in)	6	7	Passed (89% used)	code	ACI 318-14 13.3.1.2

Footing Specification

as entered on the footing, and the mat the check selected

Geometry	
Shape	Square
Column type	Concrete
Footing width	5'
Footing length	5'
Footing depth	10"
Column width	8"
Column length	8"
Pedestal height	4"
Pedestal width	4"
Pedestal length	4"

Footing Properties	
Steel yield strength	60,000 psi
Concrete strength	3,000 psi
Soil bearing pressure	1,500 psf
Concrete density	145 pcf
Top reinf. cover	3"
Bottom reinf. cover	3"
Side reinf. cover	3"
Aggregate diameter	3/4"

Soil Properties	
Soil depth above footing	0
Soil density	140 pcf
Soil cohesion	0 psf
Friction angle	30°
Water level	0

Reinforcement	
Bottom mat	Bot.(6) #4 Long, (6) #4 Short
Bars the long way	(6) #4
Bars the short way	(6) #4
Selected for	moment and minimum steel
Plain concrete (no reinforcing)	No
Override rebar	No
Include water level	No
Allow bearing pressure increase	No

- Soil bearing is checked at service level (ASD) and includes the footing's own weight; shear, moment and crushing at strength level (LRFD), ACI 318-14, loads combined to ASCE 7-16.
- Reinforcement is selected for the moment and for minimum steel (ACI 318-14: 0.0018 Ag for Grade 60), at no more than 3h or 18 in.

Applied Loads	Location	Trib. Width	Dead (0.90)	Snow (1.15)	Comments
1 - Point (lb)	--	N/A	3,372	27,070	Linked from: Header #8, Support 1

SpotFtg Hdr #8-2

Spot Footing 5' x 5' x 10" deep -- Bot.(6) #4 Long, (6) #4 Short

Level: Foundation | f'c 3,000 psi | rebar Fy 60 ksi | soil 1,500 psf | Concrete column 8" x 8" | ACI 318-14

PASSED

Controls: Soil Bearing Pressure 89% used
Adequacy 10.8% (capacity to spare)

WHAT LOADS IT

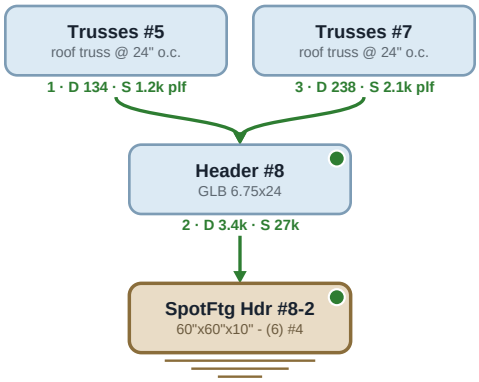

SECTION

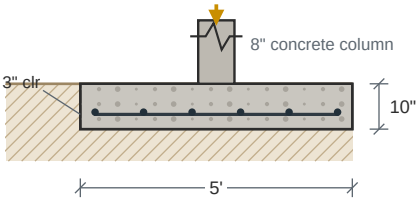

PLAN -- BOTTOM MAT

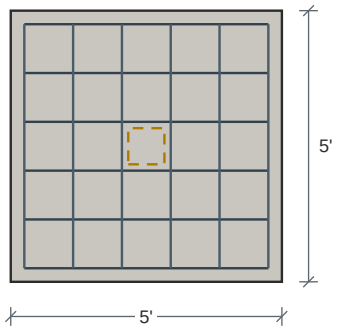

Bot.(6) #4 Long, (6) #4 Short

Carrying: Dead 3,372 lb Snow 27,070 lb

Design Results	Actual	Allowed	Result	Method	Load Combination
Soil Bearing Pressure (psf)	1,339	1,500	Passed (89% used)	ASD	D+S
One-Way Shear X (lbs)	15,589	30,809	Passed (51% used)	LRFD	1.2D+1.6S+L
One-Way Shear Y (lbs)	15,589	30,809	Passed (51% used)	LRFD	1.2D+1.6S+L
Two-Way Shear (lbs)	44,593	61,947	Passed (72% used)	LRFD	1.2D+1.6S+L
Moment X (ft-lbs)	22,233	32,479	Passed (68% used)	LRFD	1.2D+1.6S+L
Moment Y (ft-lbs)	22,233	32,479	Passed (68% used)	LRFD	1.2D+1.6S+L
Crushing (lbs)	47,359	212,160	Passed (22% used)	LRFD	1.2D+1.6S+L
Depth Above Bars (in)	6	7	Passed (89% used)	code	ACI 318-14 13.3.1.2

Footing Specification

as entered on the footing, and the mat the check selected

Geometry	
Shape	Square
Column type	Concrete
Footing width	5'
Footing length	5'
Footing depth	10"
Column width	8"
Column length	8"
Pedestal height	4"
Pedestal width	4"
Pedestal length	4"

Footing Properties	
Steel yield strength	60,000 psi
Concrete strength	3,000 psi
Soil bearing pressure	1,500 psf
Concrete density	145 pcf
Top reinf. cover	3"
Bottom reinf. cover	3"
Side reinf. cover	3"
Aggregate diameter	3/4"

Soil Properties	
Soil depth above footing	0
Soil density	140 pcf
Soil cohesion	0 psf
Friction angle	30°
Water level	0

Reinforcement	
Bottom mat	Bot.(6) #4 Long, (6) #4 Short
Bars the long way	(6) #4
Bars the short way	(6) #4
Selected for	moment and minimum steel
Plain concrete (no reinforcing)	No
Override rebar	No
Include water level	No
Allow bearing pressure increase	No

- Soil bearing is checked at service level (ASD) and includes the footing's own weight; shear, moment and crushing at strength level (LRFD), ACI 318-14, loads combined to ASCE 7-16.
- Reinforcement is selected for the moment and for minimum steel (ACI 318-14: 0.0018 Ag for Grade 60), at no more than 3h or 18 in.

Applied Loads	Location	Trib. Width	Dead (0.90)	Snow (1.15)	Comments
1 - Point (lb)	--	N/A	3,372	27,070	Linked from: Header #8, Support 2

SpotFtg Hdr #9-1

PASSED

Spot Footing 4' 6" x 4' 6" x 10" deep -- Bot.(5) #4 Long, (5) #4 Short

Level: Foundation | f'c 3,000 psi | rebar Fy 60 ksi | soil 1,500 psf | Concrete column 8" x 8" | ACI 318-14

Controls: Soil Bearing Pressure 91% used
Adequacy 8.8% (capacity to spare)

WHAT LOADS IT

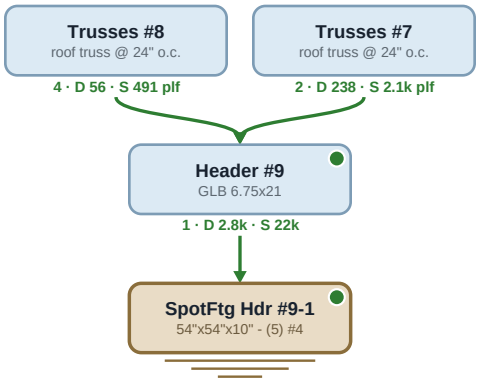

SECTION

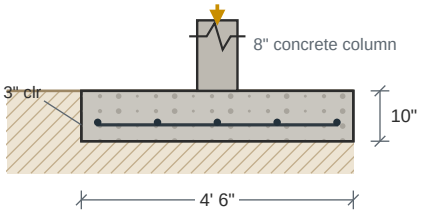

PLAN -- BOTTOM MAT

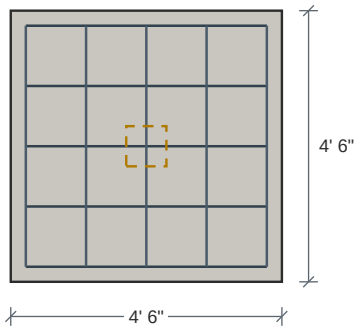

Bot.(5) #4 Long, (5) #4 Short

Carrying: Dead 2,840 lb Snow 22,424 lb

Design Results	Actual	Allowed	Result	Method	Load Combination
Soil Bearing Pressure (psf)	1,368	1,500	Passed (91% used)	ASD	D+S
One-Way Shear X (lbs)	12,186	27,728	Passed (44% used)	LRFD	1.2D+1.6S+L
One-Way Shear Y (lbs)	12,186	27,728	Passed (44% used)	LRFD	1.2D+1.6S+L
Two-Way Shear (lbs)	36,453	61,947	Passed (59% used)	LRFD	1.2D+1.6S+L
Moment X (ft-lbs)	16,036	27,145	Passed (59% used)	LRFD	1.2D+1.6S+L
Moment Y (ft-lbs)	16,036	27,145	Passed (59% used)	LRFD	1.2D+1.6S+L
Crushing (lbs)	39,286	212,160	Passed (19% used)	LRFD	1.2D+1.6S+L
Depth Above Bars (in)	6	7	Passed (89% used)	code	ACI 318-14 13.3.1.2

Footing Specification

as entered on the footing, and the mat the check selected

Geometry	
Shape	Square
Column type	Concrete
Footing width	4' 6"
Footing length	4' 6"
Footing depth	10"
Column width	8"
Column length	8"
Pedestal height	4"
Pedestal width	4"
Pedestal length	4"

Footing Properties	
Steel yield strength	60,000 psi
Concrete strength	3,000 psi
Soil bearing pressure	1,500 psf
Concrete density	145 pcf
Top reinf. cover	3"
Bottom reinf. cover	3"
Side reinf. cover	3"
Aggregate diameter	3/4"

Soil Properties	
Soil depth above footing	0
Soil density	140 pcf
Soil cohesion	0 psf
Friction angle	30°
Water level	0

Reinforcement	
Bottom mat	Bot.(5) #4 Long, (5) #4 Short
Bars the long way	(5) #4
Bars the short way	(5) #4
Selected for	moment and minimum steel
Plain concrete (no reinforcing)	No
Override rebar	No
Include water level	No
Allow bearing pressure increase	No

- Soil bearing is checked at service level (ASD) and includes the footing's own weight; shear, moment and crushing at strength level (LRFD), ACI 318-14, loads combined to ASCE 7-16.
- Reinforcement is selected for the moment and for minimum steel (ACI 318-14: 0.0018 Ag for Grade 60), at no more than 3h or 18 in.

Applied Loads	Location	Trib. Width	Dead (0.90)	Snow (1.15)	Comments
1 - Point (lb)	--	N/A	2,840	22,424	Linked from: Header #9, Support 1

SpotFtg Hdr #9-2

Spot Footing 4' 6" x 4' 6" x 10" deep -- Bot.(5) #4 Long, (5) #4 Short

Level: Foundation | f'c 3,000 psi | rebar Fy 60 ksi | soil 1,500 psf | Concrete column 8" x 8" | ACI 318-14

PASSED

Controls: Depth Above Bars 89% used
Adequacy 15.4% (capacity to spare)

WHAT LOADS IT

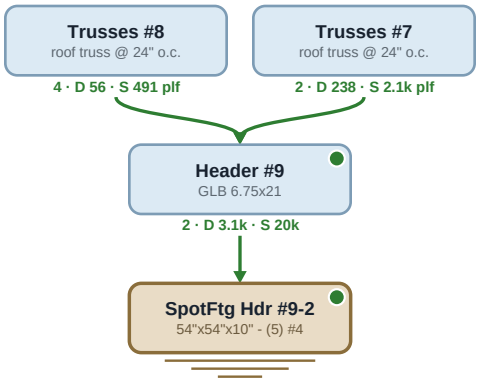

SECTION

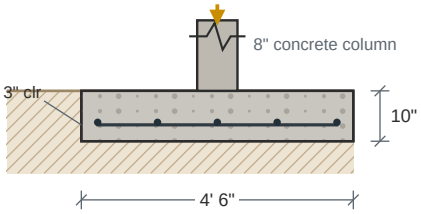

PLAN -- BOTTOM MAT

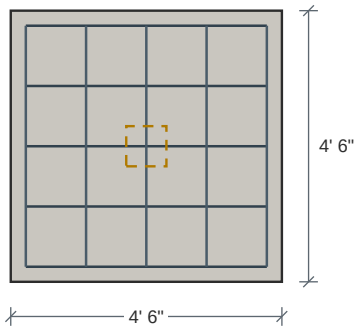

Bot.(5) #4 Long, (5) #4 Short

Carrying: Dead 3,052 lb Snow 20,184 lb

Design Results	Actual	Allowed	Result	Method	Load Combination
Soil Bearing Pressure (psf)	1,268	1,500	Passed (85% used)	ASD	D+S
One-Way Shear X (lbs)	11,153	27,728	Passed (40% used)	LRFD	1.2D+1.6S+L
One-Way Shear Y (lbs)	11,153	27,728	Passed (40% used)	LRFD	1.2D+1.6S+L
Two-Way Shear (lbs)	33,364	61,947	Passed (54% used)	LRFD	1.2D+1.6S+L
Moment X (ft-lbs)	14,677	27,145	Passed (54% used)	LRFD	1.2D+1.6S+L
Moment Y (ft-lbs)	14,677	27,145	Passed (54% used)	LRFD	1.2D+1.6S+L
Crushing (lbs)	35,956	212,160	Passed (17% used)	LRFD	1.2D+1.6S+L
Depth Above Bars (in)	6	7	Passed (89% used)	code	ACI 318-14 13.3.1.2

Footing Specification

as entered on the footing, and the mat the check selected

Geometry	
Shape	Square
Column type	Concrete
Footing width	4' 6"
Footing length	4' 6"
Footing depth	10"
Column width	8"
Column length	8"
Pedestal height	4"
Pedestal width	4"
Pedestal length	4"

Footing Properties	
Steel yield strength	60,000 psi
Concrete strength	3,000 psi
Soil bearing pressure	1,500 psf
Concrete density	145 pcf
Top reinf. cover	3"
Bottom reinf. cover	3"
Side reinf. cover	3"
Aggregate diameter	3/4"

Soil Properties	
Soil depth above footing	0
Soil density	140 pcf
Soil cohesion	0 psf
Friction angle	30°
Water level	0

Reinforcement	
Bottom mat	Bot.(5) #4 Long, (5) #4 Short
Bars the long way	(5) #4
Bars the short way	(5) #4
Selected for	moment and minimum steel
Plain concrete (no reinforcing)	No
Override rebar	No
Include water level	No
Allow bearing pressure increase	No

- Soil bearing is checked at service level (ASD) and includes the footing's own weight; shear, moment and crushing at strength level (LRFD), ACI 318-14, loads combined to ASCE 7-16.
- Reinforcement is selected for the moment and for minimum steel (ACI 318-14: 0.0018 Ag for Grade 60), at no more than 3h or 18 in.

Applied Loads	Location	Trib. Width	Dead (0.90)	Snow (1.15)	Comments
1 - Point (lb)	--	N/A	3,052	20,184	Linked from: Header #9, Support 2

SpotFtg Hdr #10-2

Spot Footing 2' x 2' x 10" deep -- Bot.(3) #4 Long, (3) #4 Short

Level: Foundation | f'c 3,000 psi | rebar Fy 60 ksi | soil 1,500 psf | Concrete column 8" x 8" | ACI 318-14

PASSED

Controls: Depth Above Bars 89% used
Adequacy 12.8% (capacity to spare)

WHAT LOADS IT

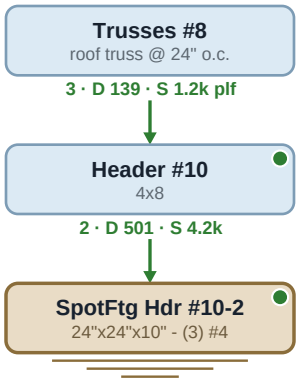

SECTION

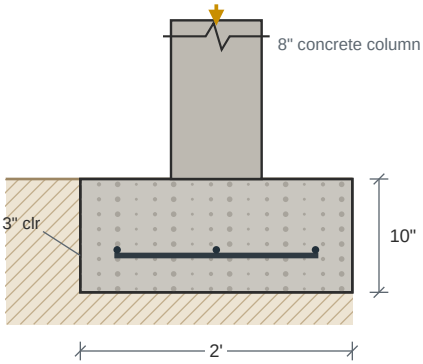

PLAN -- BOTTOM MAT

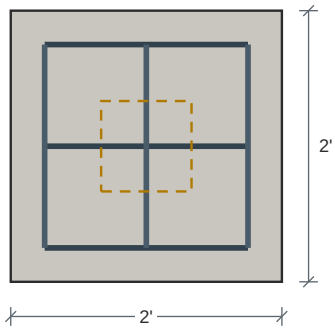

Bot.(3) #4 Long, (3) #4 Short

Carrying: Dead 501 lb Snow 4,245 lb

Design Results	Actual	Allowed	Result	Method	Load Combination
Soil Bearing Pressure (psf)	1,307	1,500	Passed (87% used)	ASD	D+S
One-Way Shear X (lbs)	539	12,324	Passed (4% used)	LRFD	1.2D+1.6S+L
One-Way Shear Y (lbs)	539	12,324	Passed (4% used)	LRFD	1.2D+1.6S+L
Two-Way Shear (lbs)	4,694	61,947	Passed (8% used)	LRFD	1.2D+1.6S+L
Moment X (ft-lbs)	821	16,081	Passed (5% used)	LRFD	1.2D+1.6S+L
Moment Y (ft-lbs)	821	16,081	Passed (5% used)	LRFD	1.2D+1.6S+L
Crushing (lbs)	7,393	212,160	Passed (3% used)	LRFD	1.2D+1.6S+L
Depth Above Bars (in)	6	7	Passed (89% used)	code	ACI 318-14 13.3.1.2

Footing Specification

as entered on the footing, and the mat the check selected

Geometry	
Shape	Square
Column type	Concrete
Footing width	2'
Footing length	2'
Footing depth	10"
Column width	8"
Column length	8"
Pedestal height	4"
Pedestal width	4"
Pedestal length	4"

Footing Properties	
Steel yield strength	60,000 psi
Concrete strength	3,000 psi
Soil bearing pressure	1,500 psf
Concrete density	145 pcf
Top reinf. cover	3"
Bottom reinf. cover	3"
Side reinf. cover	3"
Aggregate diameter	3/4"

Soil Properties	
Soil depth above footing	0
Soil density	140 pcf
Soil cohesion	0 psf
Friction angle	30°
Water level	0

Reinforcement	
Bottom mat	Bot.(3) #4 Long, (3) #4 Short
Bars the long way	(3) #4
Bars the short way	(3) #4
Selected for	moment and minimum steel
Plain concrete (no reinforcing)	No
Override rebar	No
Include water level	No
Allow bearing pressure increase	No

- Soil bearing is checked at service level (ASD) and includes the footing's own weight; shear, moment and crushing at strength level (LRFD), ACI 318-14, loads combined to ASCE 7-16.
- Reinforcement is selected for the moment and for minimum steel (ACI 318-14: 0.0018 Ag for Grade 60), at no more than 3h or 18 in.

Applied Loads	Location	Trib. Width	Dead (0.90)	Snow (1.15)	Comments
1 - Point (lb)	--	N/A	501.1	4,245	Linked from: Header #10, Support 2

SpotFtg Hdr #10-3

PASSED

Spot Footing 2' x 2' x 10" deep -- Bot.(3) #4 Long, (3) #4 Short

Level: Foundation | f'c 3,000 psi | rebar Fy 60 ksi | soil 1,500 psf | Concrete column 8" x 8" | ACI 318-14

Controls: Depth Above Bars 89% used
Adequacy 12.8% (capacity to spare)

WHAT LOADS IT

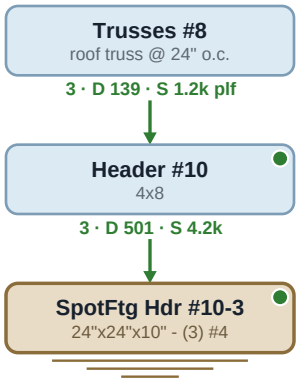

SECTION

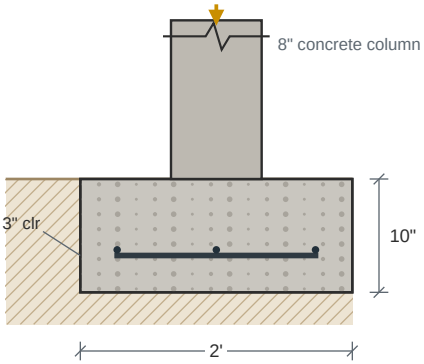

PLAN -- BOTTOM MAT

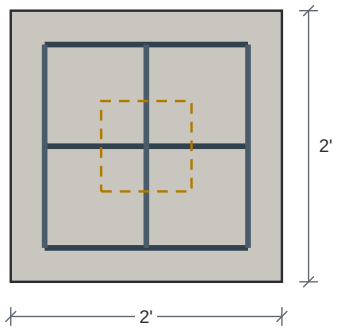

Bot.(3) #4 Long, (3) #4 Short

Carrying: Dead 501 lb Snow 4,245 lb

Design Results	Actual	Allowed	Result	Method	Load Combination
Soil Bearing Pressure (psf)	1,307	1,500	Passed (87% used)	ASD	D+S
One-Way Shear X (lbs)	539	12,324	Passed (4% used)	LRFD	1.2D+1.6S+L
One-Way Shear Y (lbs)	539	12,324	Passed (4% used)	LRFD	1.2D+1.6S+L
Two-Way Shear (lbs)	4,694	61,947	Passed (8% used)	LRFD	1.2D+1.6S+L
Moment X (ft-lbs)	821	16,081	Passed (5% used)	LRFD	1.2D+1.6S+L
Moment Y (ft-lbs)	821	16,081	Passed (5% used)	LRFD	1.2D+1.6S+L
Crushing (lbs)	7,393	212,160	Passed (3% used)	LRFD	1.2D+1.6S+L
Depth Above Bars (in)	6	7	Passed (89% used)	code	ACI 318-14 13.3.1.2

Footing Specification

as entered on the footing, and the mat the check selected

Geometry	
Shape	Square
Column type	Concrete
Footing width	2'
Footing length	2'
Footing depth	10"
Column width	8"
Column length	8"
Pedestal height	4"
Pedestal width	4"
Pedestal length	4"

Footing Properties	
Steel yield strength	60,000 psi
Concrete strength	3,000 psi
Soil bearing pressure	1,500 psf
Concrete density	145 pcf
Top reinf. cover	3"
Bottom reinf. cover	3"
Side reinf. cover	3"
Aggregate diameter	3/4"

Soil Properties	
Soil depth above footing	0
Soil density	140 pcf
Soil cohesion	0 psf
Friction angle	30°
Water level	0

Reinforcement	
Bottom mat	Bot.(3) #4 Long, (3) #4 Short
Bars the long way	(3) #4
Bars the short way	(3) #4
Selected for	moment and minimum steel
Plain concrete (no reinforcing)	No
Override rebar	No
Include water level	No
Allow bearing pressure increase	No

- Soil bearing is checked at service level (ASD) and includes the footing's own weight; shear, moment and crushing at strength level (LRFD), ACI 318-14, loads combined to ASCE 7-16.
- Reinforcement is selected for the moment and for minimum steel (ACI 318-14: 0.0018 Ag for Grade 60), at no more than 3h or 18 in.

Applied Loads	Location	Trib. Width	Dead (0.90)	Snow (1.15)	Comments
1 - Point (lb)	--	N/A	501.1	4,245	Linked from: Header #10, Support 3

SpotFtg Hdr #13-1

PASSED

Spot Footing 2' x 4' 6" x 10" deep -- Bot.(6) #4 Long, (3) #4 Short - 4 of the Long in the center 2 ft

Controls: Depth Above Bars 89% used
Adequacy 25.4% (capacity to spare)

Level: Foundation | f'c 3,000 psi | rebar Fy 60 ksi | soil 1,500 psf | Concrete column 8" x 8" | ACI 318-14

WHAT LOADS IT

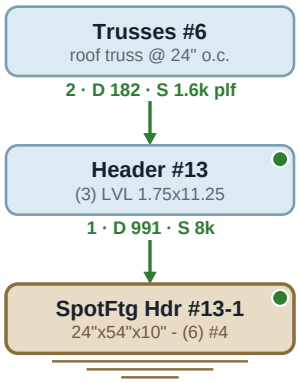

SECTION

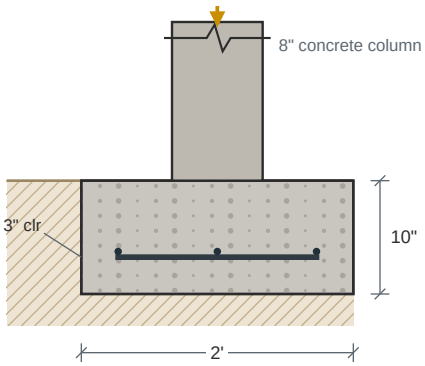

PLAN -- BOTTOM MAT

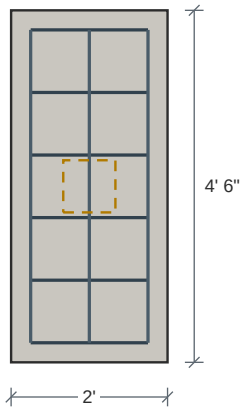

Bot.(6) #4 Long, (3) #4 Short - 4 of the Long in the center 2 ft

Carrying: Dead 991 lb Snow 7,989 lb

Design Results	Actual	Allowed	Result	Method	Load Combination
Soil Bearing Pressure (psf)	1,119	1,500	Passed (75% used)	ASD	D+S
One-Way Shear X (lbs)	4,334	12,324	Passed (35% used)	LRFD	1.2D+1.6S+L
One-Way Shear Y (lbs)	1,019	27,728	Passed (4% used)	LRFD	1.2D+1.6S+L
Two-Way Shear (lbs)	11,705	61,947	Passed (19% used)	LRFD	1.2D+1.6S+L
Moment X (ft-lbs)	5,703	16,081	Passed (35% used)	LRFD	1.2D+1.6S+L
Moment Y (ft-lbs)	1,552	32,338	Passed (5% used)	LRFD	1.2D+1.6S+L
Crushing (lbs)	13,971	212,160	Passed (7% used)	LRFD	1.2D+1.6S+L
Depth Above Bars (in)	6	7	Passed (89% used)	code	ACI 318-14 13.3.1.2

Footing Specification

as entered on the footing, and the mat the check selected

Geometry	
Shape	Square
Column type	Concrete
Footing width	2'
Footing length	4' 6"
Footing depth	10"
Column width	8"
Column length	8"
Pedestal height	4"
Pedestal width	4"
Pedestal length	4"

Footing Properties	
Steel yield strength	60,000 psi
Concrete strength	3,000 psi
Soil bearing pressure	1,500 psf
Concrete density	145 pcf
Top reinf. cover	3"
Bottom reinf. cover	3"
Side reinf. cover	3"
Aggregate diameter	3/4"

Soil Properties	
Soil depth above footing	0
Soil density	140 pcf
Soil cohesion	0 psf
Friction angle	30°
Water level	0

Reinforcement	
Bottom mat	Bot.(6) #4 Long, (3) #4 Short - 4 of the Long in
Bars the long way	(6) #4
Bars the short way	(3) #4
Selected for	moment and minimum steel
Plain concrete (no reinforcing)	No
Override rebar	No
Include water level	No
Allow bearing pressure increase	No

- Soil bearing is checked at service level (ASD) and includes the footing's own weight; shear, moment and crushing at strength level (LRFD), ACI 318-14, loads combined to ASCE 7-16.
- Reinforcement is selected for the moment and for minimum steel (ACI 318-14: 0.0018 Ag for Grade 60), at no more than 3h or 18 in.

SpotFtg Hdr #13-1 (continued)

Spot Footing | 2' x 4' 6" x 10" deep -- Bot.(6) #4 Long, (3) #4 Short - 4 of the Long in the center 2 ft

Applied Loads	Location	Trib. Width	Dead (0.90)	Snow (1.15)	Comments
1 - Point (lb)	--	N/A	991.2	7,989	Linked from: Header #13, Support 1

SpotFtg Hdr #13-2

PASSED

Spot Footing 2' x 4' 6" x 10" deep -- Bot.(6) #4 Long, (3) #4 Short - 4 of the Long in the center 2 ft

Controls: Depth Above Bars 89% used
Adequacy 25.4% (capacity to spare)

Level: Foundation | f'c 3,000 psi | rebar Fy 60 ksi | soil 1,500 psf | Concrete column 8" x 8" | ACI 318-14

WHAT LOADS IT

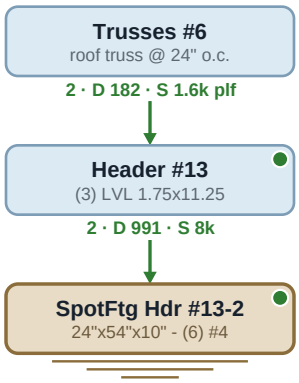

SECTION

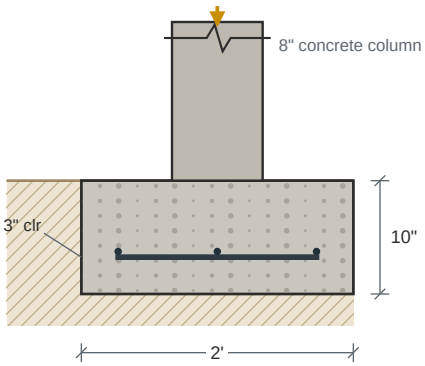

PLAN -- BOTTOM MAT

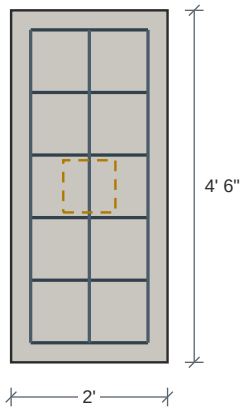

Bot.(6) #4 Long, (3) #4 Short - 4 of the Long in the center 2 ft

Carrying: Dead 991 lb Snow 7,989 lb

Design Results	Actual	Allowed	Result	Method	Load Combination
Soil Bearing Pressure (psf)	1,119	1,500	Passed (75% used)	ASD	D+S
One-Way Shear X (lbs)	4,334	12,324	Passed (35% used)	LRFD	1.2D+1.6S+L
One-Way Shear Y (lbs)	1,019	27,728	Passed (4% used)	LRFD	1.2D+1.6S+L
Two-Way Shear (lbs)	11,705	61,947	Passed (19% used)	LRFD	1.2D+1.6S+L
Moment X (ft-lbs)	5,703	16,081	Passed (35% used)	LRFD	1.2D+1.6S+L
Moment Y (ft-lbs)	1,552	32,338	Passed (5% used)	LRFD	1.2D+1.6S+L
Crushing (lbs)	13,971	212,160	Passed (7% used)	LRFD	1.2D+1.6S+L
Depth Above Bars (in)	6	7	Passed (89% used)	code	ACI 318-14 13.3.1.2

Footing Specification

as entered on the footing, and the mat the check selected

Geometry	
Shape	Square
Column type	Concrete
Footing width	2'
Footing length	4' 6"
Footing depth	10"
Column width	8"
Column length	8"
Pedestal height	4"
Pedestal width	4"
Pedestal length	4"

Footing Properties	
Steel yield strength	60,000 psi
Concrete strength	3,000 psi
Soil bearing pressure	1,500 psf
Concrete density	145 pcf
Top reinf. cover	3"
Bottom reinf. cover	3"
Side reinf. cover	3"
Aggregate diameter	3/4"

Soil Properties	
Soil depth above footing	0
Soil density	140 pcf
Soil cohesion	0 psf
Friction angle	30°
Water level	0

Reinforcement	
Bottom mat	Bot.(6) #4 Long, (3) #4 Short - 4 of the Long in
Bars the long way	(6) #4
Bars the short way	(3) #4
Selected for	moment and minimum steel
Plain concrete (no reinforcing)	No
Override rebar	No
Include water level	No
Allow bearing pressure increase	No

- Soil bearing is checked at service level (ASD) and includes the footing's own weight; shear, moment and crushing at strength level (LRFD), ACI 318-14, loads combined to ASCE 7-16.
- Reinforcement is selected for the moment and for minimum steel (ACI 318-14: 0.0018 Ag for Grade 60), at no more than 3h or 18 in.

SpotFtg Hdr #13-2 (continued)

Spot Footing | 2' x 4' 6" x 10" deep -- Bot.(6) #4 Long, (3) #4 Short - 4 of the Long in the center 2 ft

Applied Loads	Location	Trib. Width	Dead (0.90)	Snow (1.15)	Comments
1 - Point (lb)	--	N/A	991.2	7,989	Linked from: Header #13, Support 2

SpotFtg Hdr #17-2

Spot Footing 2' x 2' x 10" deep -- Unreinforced (Plain)

Level: Foundation | f'c 3,000 psi | rebar Fy 60 ksi | soil 1,500 psf | Concrete column 8" x 8" | ACI 318-14

PASSED

Controls: Minimum Thickness 80% used
Adequacy 25.2% (capacity to spare)

WHAT LOADS IT

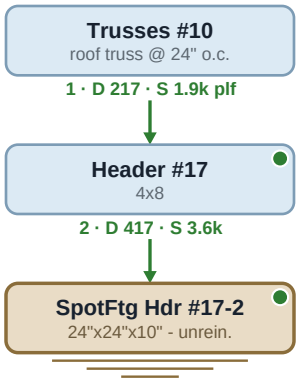

SECTION

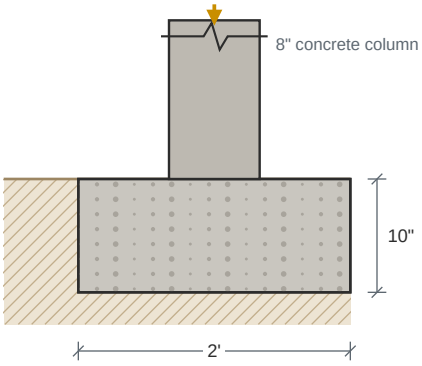

PLAN -- PLAIN CONCRETE, NO REINFORCING

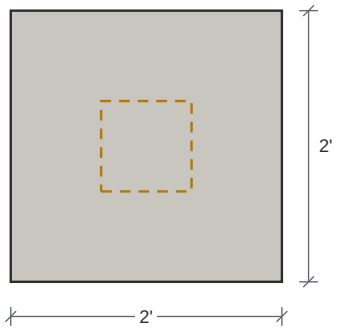

Unreinforced (Plain)

Carrying: Dead 417 lb Snow 3,586 lb

Design Results	Actual	Allowed	Result	Method	Load Combination
Soil Bearing Pressure (psf)	1,122	1,500	Passed (75% used)	ASD	D+S
Two-Way Shear (lbs)	3,466	44,757	Passed (8% used)	LRFD	1.2D+1.6S+L
Moment X (ft-lbs)	693	3,505	Passed (20% used)	LRFD	1.2D+1.6S+L
Moment Y (ft-lbs)	693	3,505	Passed (20% used)	LRFD	1.2D+1.6S+L
Crushing (lbs)	6,238	195,840	Passed (3% used)	LRFD	1.2D+1.6S+L
Minimum Thickness (in)	8	10	Passed (80% used)	code	ACI 318-14 Ch. 14

Footing Specification

as entered on the footing, and the mat the check selected

Geometry	
Shape	Square
Column type	Concrete
Footing width	2'
Footing length	2'
Footing depth	10"
Column width	8"
Column length	8"
Pedestal height	4"
Pedestal width	4"
Pedestal length	4"

Footing Properties	
Steel yield strength	60,000 psi
Concrete strength	3,000 psi
Soil bearing pressure	1,500 psf
Concrete density	145 pcf
Top reinf. cover	3"
Bottom reinf. cover	3"
Side reinf. cover	3"
Aggregate diameter	3/4"

Soil Properties	
Soil depth above footing	0
Soil density	140 pcf
Soil cohesion	0 psf
Friction angle	30°
Water level	0

Reinforcement	
Reinforcing	none -- plain concrete
Plain concrete (no reinforcing)	Yes
Override rebar	No
Include water level	No
Allow bearing pressure increase	No

- Soil bearing is checked at service level (ASD) and includes the footing's own weight; shear, moment and crushing at strength level (LRFD), ACI 318-14, loads combined to ASCE 7-16.
- Reinforcement is selected for the moment and for minimum steel (ACI 318-14: 0.0018 Ag for Grade 60), at no more than 3h or 18 in.

Applied Loads	Location	Trib. Width	Dead (0.90)	Snow (1.15)	Comments
1 - Point (lb)	--	N/A	417.2	3,586	Linked from: Header #17, Support 2

SpotFtg Hdr #18-1

PASSED

Spot Footing 2' 6" x 2' 6" x 10" deep -- Bot.(3) #4 Long, (3) #4 Short

Level: Foundation | f'c 3,000 psi | rebar Fy 60 ksi | soil 1,500 psf | Concrete column 8" x 8" | ACI 318-14

Controls: Depth Above Bars 89% used
Adequacy 29.3% (capacity to spare)

WHAT LOADS IT

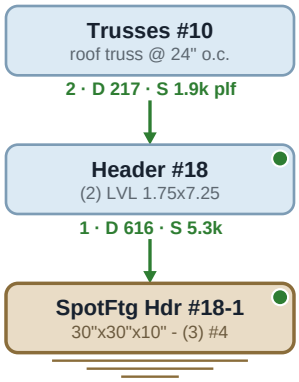

SECTION

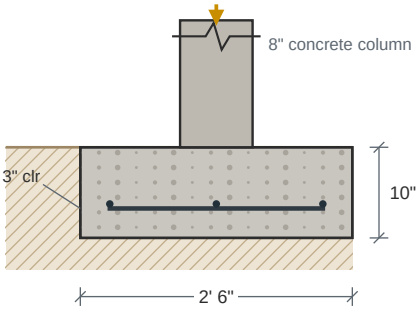

PLAN -- BOTTOM MAT

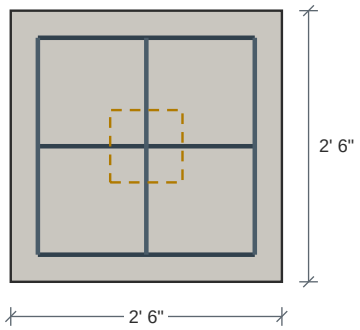

Bot.(3) #4 Long, (3) #4 Short

Carrying: Dead 616 lb Snow 5,259 lb

Design Results	Actual	Allowed	Result	Method	Load Combination
Soil Bearing Pressure (psf)	1,061	1,500	Passed (71% used)	ASD	D+S
One-Way Shear X (lbs)	1,449	15,405	Passed (9% used)	LRFD	1.2D+1.6S+L
One-Way Shear Y (lbs)	1,449	15,405	Passed (9% used)	LRFD	1.2D+1.6S+L
Two-Way Shear (lbs)	7,016	61,947	Passed (11% used)	LRFD	1.2D+1.6S+L
Moment X (ft-lbs)	1,538	16,240	Passed (9% used)	LRFD	1.2D+1.6S+L
Moment Y (ft-lbs)	1,538	16,240	Passed (9% used)	LRFD	1.2D+1.6S+L
Crushing (lbs)	9,155	212,160	Passed (4% used)	LRFD	1.2D+1.6S+L
Depth Above Bars (in)	6	7	Passed (89% used)	code	ACI 318-14 13.3.1.2

Footing Specification

as entered on the footing, and the mat the check selected

Geometry	
Shape	Square
Column type	Concrete
Footing width	2' 6"
Footing length	2' 6"
Footing depth	10"
Column width	8"
Column length	8"
Pedestal height	4"
Pedestal width	4"
Pedestal length	4"

Footing Properties	
Steel yield strength	60,000 psi
Concrete strength	3,000 psi
Soil bearing pressure	1,500 psf
Concrete density	145 pcf
Top reinf. cover	3"
Bottom reinf. cover	3"
Side reinf. cover	3"
Aggregate diameter	3/4"

Soil Properties	
Soil depth above footing	0
Soil density	140 pcf
Soil cohesion	0 psf
Friction angle	30°
Water level	0

Reinforcement	
Bottom mat	Bot.(3) #4 Long, (3) #4 Short
Bars the long way	(3) #4
Bars the short way	(3) #4
Selected for	moment and minimum steel
Plain concrete (no reinforcing)	No
Override rebar	No
Include water level	No
Allow bearing pressure increase	No

- Soil bearing is checked at service level (ASD) and includes the footing's own weight; shear, moment and crushing at strength level (LRFD), ACI 318-14, loads combined to ASCE 7-16.
- Reinforcement is selected for the moment and for minimum steel (ACI 318-14: 0.0018 Ag for Grade 60), at no more than 3h or 18 in.

Applied Loads	Location	Trib. Width	Dead (0.90)	Snow (1.15)	Comments
1 - Point (lb)	--	N/A	616.4	5,259	Linked from: Header #18, Support 1

SpotFtg Hdr #18-2

Spot Footing 2' 6" x 2' 6" x 10" deep -- Bot.(3) #4 Long, (3) #4 Short

Level: Foundation | f'c 3,000 psi | rebar Fy 60 ksi | soil 1,500 psf | Concrete column 8" x 8" | ACI 318-14

PASSED

Controls: Depth Above Bars 89% used
Adequacy 29.3% (capacity to spare)

WHAT LOADS IT

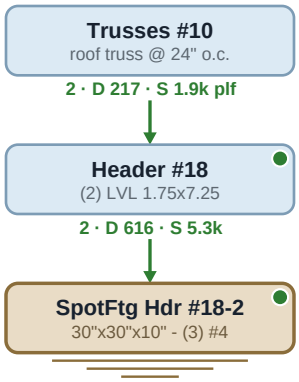

SECTION

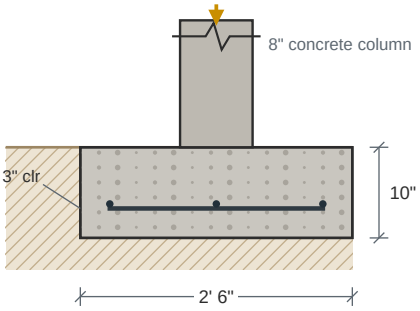

PLAN -- BOTTOM MAT

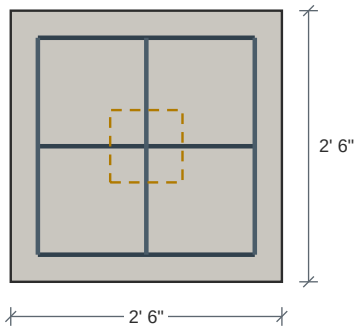

Bot.(3) #4 Long, (3) #4 Short

Carrying: Dead 616 lb Snow 5,259 lb

Design Results	Actual	Allowed	Result	Method	Load Combination
Soil Bearing Pressure (psf)	1,061	1,500	Passed (71% used)	ASD	D+S
One-Way Shear X (lbs)	1,449	15,405	Passed (9% used)	LRFD	1.2D+1.6S+L
One-Way Shear Y (lbs)	1,449	15,405	Passed (9% used)	LRFD	1.2D+1.6S+L
Two-Way Shear (lbs)	7,016	61,947	Passed (11% used)	LRFD	1.2D+1.6S+L
Moment X (ft-lbs)	1,538	16,240	Passed (9% used)	LRFD	1.2D+1.6S+L
Moment Y (ft-lbs)	1,538	16,240	Passed (9% used)	LRFD	1.2D+1.6S+L
Crushing (lbs)	9,155	212,160	Passed (4% used)	LRFD	1.2D+1.6S+L
Depth Above Bars (in)	6	7	Passed (89% used)	code	ACI 318-14 13.3.1.2

Footing Specification

as entered on the footing, and the mat the check selected

Geometry	
Shape	Square
Column type	Concrete
Footing width	2' 6"
Footing length	2' 6"
Footing depth	10"
Column width	8"
Column length	8"
Pedestal height	4"
Pedestal width	4"
Pedestal length	4"

Footing Properties	
Steel yield strength	60,000 psi
Concrete strength	3,000 psi
Soil bearing pressure	1,500 psf
Concrete density	145 pcf
Top reinf. cover	3"
Bottom reinf. cover	3"
Side reinf. cover	3"
Aggregate diameter	3/4"

Soil Properties	
Soil depth above footing	0
Soil density	140 pcf
Soil cohesion	0 psf
Friction angle	30°
Water level	0

Reinforcement	
Bottom mat	Bot.(3) #4 Long, (3) #4 Short
Bars the long way	(3) #4
Bars the short way	(3) #4
Selected for	moment and minimum steel
Plain concrete (no reinforcing)	No
Override rebar	No
Include water level	No
Allow bearing pressure increase	No

- Soil bearing is checked at service level (ASD) and includes the footing's own weight; shear, moment and crushing at strength level (LRFD), ACI 318-14, loads combined to ASCE 7-16.
- Reinforcement is selected for the moment and for minimum steel (ACI 318-14: 0.0018 Ag for Grade 60), at no more than 3h or 18 in.

Applied Loads	Location	Trib. Width	Dead (0.90)	Snow (1.15)	Comments
1 - Point (lb)	--	N/A	616.4	5,259	Linked from: Header #18, Support 2

SpotFtg Hdr #19-1

PASSED

Spot Footing 2' x 2' x 10" deep -- Unreinforced (Plain)

Level: Foundation | f'c 3,000 psi | rebar Fy 60 ksi | soil 1,500 psf | Concrete column 8" x 8" | ACI 318-14

Controls: Minimum Thickness 80% used
Adequacy 25.2% (capacity to spare)

WHAT LOADS IT

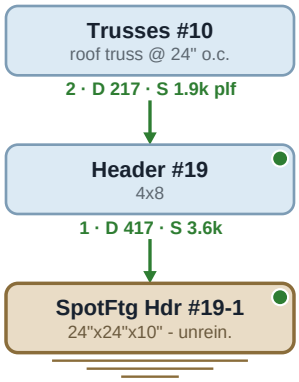

SECTION

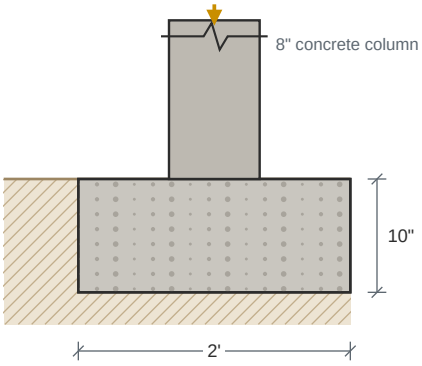

PLAN -- PLAIN CONCRETE, NO REINFORCING

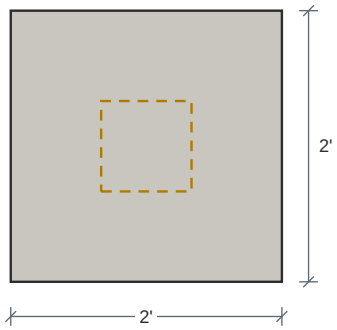

Unreinforced (Plain)

Carrying: Dead 417 lb Snow 3,586 lb

Design Results	Actual	Allowed	Result	Method	Load Combination
Soil Bearing Pressure (psf)	1,122	1,500	Passed (75% used)	ASD	D+S
Two-Way Shear (lbs)	3,466	44,757	Passed (8% used)	LRFD	1.2D+1.6S+L
Moment X (ft-lbs)	693	3,505	Passed (20% used)	LRFD	1.2D+1.6S+L
Moment Y (ft-lbs)	693	3,505	Passed (20% used)	LRFD	1.2D+1.6S+L
Crushing (lbs)	6,238	195,840	Passed (3% used)	LRFD	1.2D+1.6S+L
Minimum Thickness (in)	8	10	Passed (80% used)	code	ACI 318-14 Ch. 14

Footing Specification

as entered on the footing, and the mat the check selected

Geometry	
Shape	Square
Column type	Concrete
Footing width	2'
Footing length	2'
Footing depth	10"
Column width	8"
Column length	8"
Pedestal height	4"
Pedestal width	4"
Pedestal length	4"

Footing Properties	
Steel yield strength	60,000 psi
Concrete strength	3,000 psi
Soil bearing pressure	1,500 psf
Concrete density	145 pcf
Top reinf. cover	3"
Bottom reinf. cover	3"
Side reinf. cover	3"
Aggregate diameter	3/4"

Soil Properties	
Soil depth above footing	0
Soil density	140 pcf
Soil cohesion	0 psf
Friction angle	30°
Water level	0

Reinforcement	
Reinforcing	none -- plain concrete
Plain concrete (no reinforcing)	Yes
Override rebar	No
Include water level	No
Allow bearing pressure increase	No

- Soil bearing is checked at service level (ASD) and includes the footing's own weight; shear, moment and crushing at strength level (LRFD), ACI 318-14, loads combined to ASCE 7-16.
- Reinforcement is selected for the moment and for minimum steel (ACI 318-14: 0.0018 Ag for Grade 60), at no more than 3h or 18 in.

Applied Loads	Location	Trib. Width	Dead (0.90)	Snow (1.15)	Comments
1 - Point (lb)	--	N/A	417.2	3,586	Linked from: Header #19, Support 1

SpotFtg Hdr #19-2

Spot Footing 2' x 2' x 10" deep -- Unreinforced (Plain)

Level: Foundation | f'c 3,000 psi | rebar Fy 60 ksi | soil 1,500 psf | Concrete column 8" x 8" | ACI 318-14

PASSED

Controls: Minimum Thickness 80% used
Adequacy 25.2% (capacity to spare)

WHAT LOADS IT

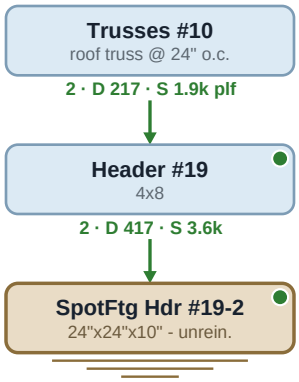

SECTION

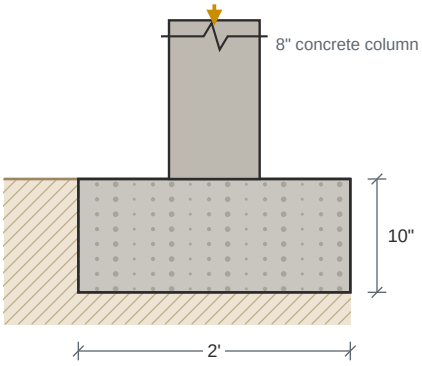

PLAN -- PLAIN CONCRETE, NO REINFORCING

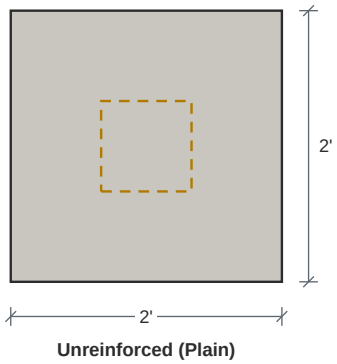

Unreinforced (Plain)

Carrying: Dead 417 lb Snow 3,586 lb

Design Results	Actual	Allowed	Result	Method	Load Combination
Soil Bearing Pressure (psf)	1,122	1,500	Passed (75% used)	ASD	D+S
Two-Way Shear (lbs)	3,466	44,757	Passed (8% used)	LRFD	1.2D+1.6S+L
Moment X (ft-lbs)	693	3,505	Passed (20% used)	LRFD	1.2D+1.6S+L
Moment Y (ft-lbs)	693	3,505	Passed (20% used)	LRFD	1.2D+1.6S+L
Crushing (lbs)	6,238	195,840	Passed (3% used)	LRFD	1.2D+1.6S+L
Minimum Thickness (in)	8	10	Passed (80% used)	code	ACI 318-14 Ch. 14

Footing Specification

as entered on the footing, and the mat the check selected

Geometry	
Shape	Square
Column type	Concrete
Footing width	2'
Footing length	2'
Footing depth	10"
Column width	8"
Column length	8"
Pedestal height	4"
Pedestal width	4"
Pedestal length	4"

Footing Properties	
Steel yield strength	60,000 psi
Concrete strength	3,000 psi
Soil bearing pressure	1,500 psf
Concrete density	145 pcf
Top reinf. cover	3"
Bottom reinf. cover	3"
Side reinf. cover	3"
Aggregate diameter	3/4"

Soil Properties	
Soil depth above footing	0
Soil density	140 pcf
Soil cohesion	0 psf
Friction angle	30°
Water level	0

Reinforcement	
Reinforcing	none -- plain concrete
Plain concrete (no reinforcing)	Yes
Override rebar	No
Include water level	No
Allow bearing pressure increase	No

- Soil bearing is checked at service level (ASD) and includes the footing's own weight; shear, moment and crushing at strength level (LRFD), ACI 318-14, loads combined to ASCE 7-16.
- Reinforcement is selected for the moment and for minimum steel (ACI 318-14: 0.0018 Ag for Grade 60), at no more than 3h or 18 in.

Applied Loads	Location	Trib. Width	Dead (0.90)	Snow (1.15)	Comments
1 - Point (lb)	--	N/A	417.2	3,586	Linked from: Header #19, Support 2

SpotFtg Hdr #25-2

Spot Footing 2' x 2' x 10" deep -- Unreinforced (Plain)

Level: Foundation | f'c 3,000 psi | rebar Fy 60 ksi | soil 1,500 psf | Concrete column 8" x 8" | ACI 318-14

PASSED

Controls: Minimum Thickness 80% used
Adequacy 36.4% (capacity to spare)

WHAT LOADS IT

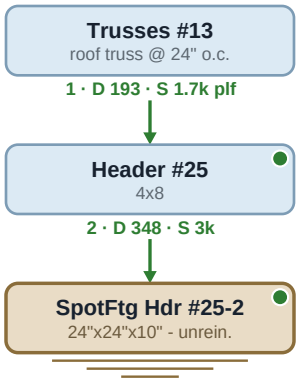

SECTION

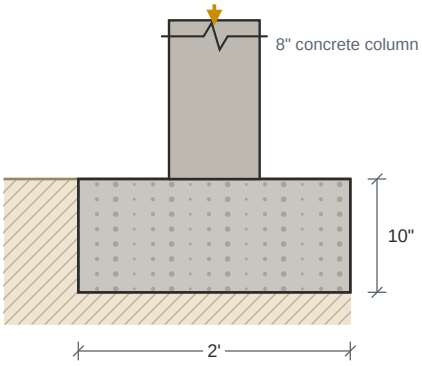

PLAN -- PLAIN CONCRETE, NO REINFORCING

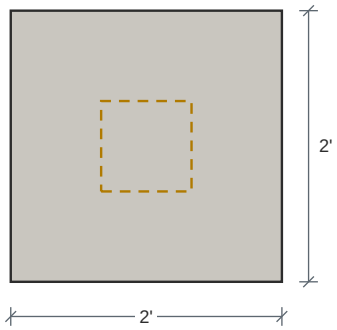

Unreinforced (Plain)

Carrying: Dead 348 lb Snow 2,983 lb

Design Results	Actual	Allowed	Result	Method	Load Combination
Soil Bearing Pressure (psf)	954	1,500	Passed (64% used)	ASD	D+S
Two-Way Shear (lbs)	2,884	44,757	Passed (6% used)	LRFD	1.2D+1.6S+L
Moment X (ft-lbs)	577	3,505	Passed (16% used)	LRFD	1.2D+1.6S+L
Moment Y (ft-lbs)	577	3,505	Passed (16% used)	LRFD	1.2D+1.6S+L
Crushing (lbs)	5,191	195,840	Passed (3% used)	LRFD	1.2D+1.6S+L
Minimum Thickness (in)	8	10	Passed (80% used)	code	ACI 318-14 Ch. 14

Footing Specification

as entered on the footing, and the mat the check selected

Geometry	
Shape	Square
Column type	Concrete
Footing width	2'
Footing length	2'
Footing depth	10"
Column width	8"
Column length	8"
Pedestal height	4"
Pedestal width	4"
Pedestal length	4"

Footing Properties	
Steel yield strength	60,000 psi
Concrete strength	3,000 psi
Soil bearing pressure	1,500 psf
Concrete density	145 pcf
Top reinf. cover	3"
Bottom reinf. cover	3"
Side reinf. cover	3"
Aggregate diameter	3/4"

Soil Properties	
Soil depth above footing	0
Soil density	140 pcf
Soil cohesion	0 psf
Friction angle	30°
Water level	0

Reinforcement	
Reinforcing	none -- plain concrete
Plain concrete (no reinforcing)	Yes
Override rebar	No
Include water level	No
Allow bearing pressure increase	No

- Soil bearing is checked at service level (ASD) and includes the footing's own weight; shear, moment and crushing at strength level (LRFD), ACI 318-14, loads combined to ASCE 7-16.
- Reinforcement is selected for the moment and for minimum steel (ACI 318-14: 0.0018 Ag for Grade 60), at no more than 3h or 18 in.

Applied Loads	Location	Trib. Width	Dead (0.90)	Snow (1.15)	Comments
1 - Point (lb)	--	N/A	348.2	2,983	Linked from: Header #25, Support 2

SpotFtg Hdr #26-1

PASSED

Spot Footing 2' x 2' x 10" deep -- Bot.(3) #4 Long, (3) #4 Short

Level: Foundation | f'c 3,000 psi | rebar Fy 60 ksi | soil 1,500 psf | Concrete column 8" x 8" | ACI 318-14

Controls: Depth Above Bars 89% used
Adequacy 22.8% (capacity to spare)

WHAT LOADS IT

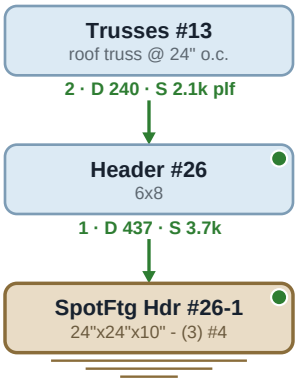

SECTION

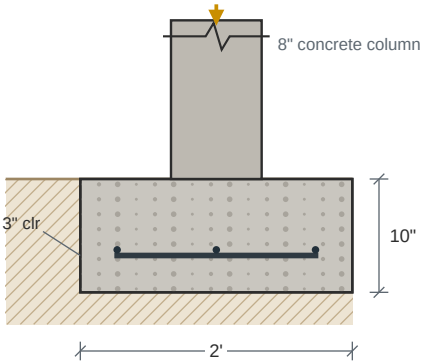

PLAN -- BOTTOM MAT

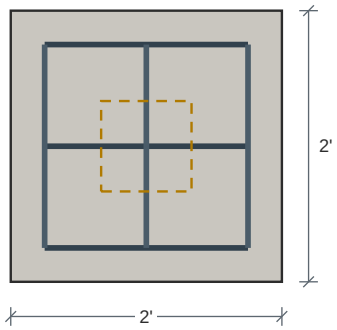

Bot.(3) #4 Long, (3) #4 Short

Carrying: Dead 437 lb Snow 3,711 lb

Design Results	Actual	Allowed	Result	Method	Load Combination
Soil Bearing Pressure (psf)	1,158	1,500	Passed (77% used)	ASD	D+S
One-Way Shear X (lbs)	471	12,324	Passed (4% used)	LRFD	1.2D+1.6S+L
One-Way Shear Y (lbs)	471	12,324	Passed (4% used)	LRFD	1.2D+1.6S+L
Two-Way Shear (lbs)	4,103	61,947	Passed (7% used)	LRFD	1.2D+1.6S+L
Moment X (ft-lbs)	718	16,081	Passed (4% used)	LRFD	1.2D+1.6S+L
Moment Y (ft-lbs)	718	16,081	Passed (4% used)	LRFD	1.2D+1.6S+L
Crushing (lbs)	6,461	212,160	Passed (3% used)	LRFD	1.2D+1.6S+L
Depth Above Bars (in)	6	7	Passed (89% used)	code	ACI 318-14 13.3.1.2

Footing Specification

as entered on the footing, and the mat the check selected

Geometry	
Shape	Square
Column type	Concrete
Footing width	2'
Footing length	2'
Footing depth	10"
Column width	8"
Column length	8"
Pedestal height	4"
Pedestal width	4"
Pedestal length	4"

Footing Properties	
Steel yield strength	60,000 psi
Concrete strength	3,000 psi
Soil bearing pressure	1,500 psf
Concrete density	145 pcf
Top reinf. cover	3"
Bottom reinf. cover	3"
Side reinf. cover	3"
Aggregate diameter	3/4"

Soil Properties	
Soil depth above footing	0
Soil density	140 pcf
Soil cohesion	0 psf
Friction angle	30°
Water level	0

Reinforcement	
Bottom mat	Bot.(3) #4 Long, (3) #4 Short
Bars the long way	(3) #4
Bars the short way	(3) #4
Selected for	moment and minimum steel
Plain concrete (no reinforcing)	No
Override rebar	No
Include water level	No
Allow bearing pressure increase	No

- Soil bearing is checked at service level (ASD) and includes the footing's own weight; shear, moment and crushing at strength level (LRFD), ACI 318-14, loads combined to ASCE 7-16.
- Reinforcement is selected for the moment and for minimum steel (ACI 318-14: 0.0018 Ag for Grade 60), at no more than 3h or 18 in.

Applied Loads	Location	Trib. Width	Dead (0.90)	Snow (1.15)	Comments
1 - Point (lb)	--	N/A	437	3,711	Linked from: Header #26, Support 1

SpotFtg Hdr #26-2

Spot Footing 2' x 2' x 10" deep -- Bot.(3) #4 Long, (3) #4 Short

Level: Foundation | f'c 3,000 psi | rebar Fy 60 ksi | soil 1,500 psf | Concrete column 8" x 8" | ACI 318-14

PASSED

Controls: Depth Above Bars 89% used
Adequacy 22.8% (capacity to spare)

WHAT LOADS IT

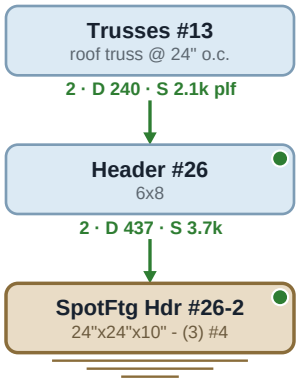

SECTION

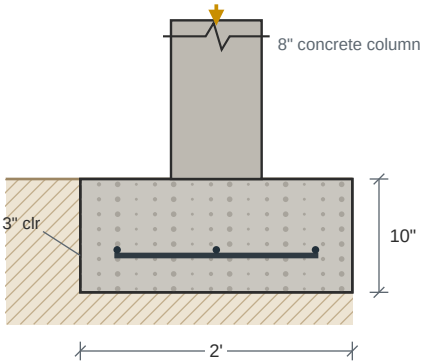

PLAN -- BOTTOM MAT

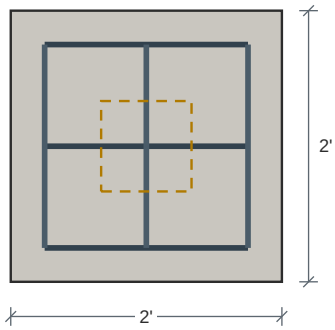

Bot.(3) #4 Long, (3) #4 Short

Carrying: Dead 437 lb Snow 3,711 lb

Design Results	Actual	Allowed	Result	Method	Load Combination
Soil Bearing Pressure (psf)	1,158	1,500	Passed (77% used)	ASD	D+S
One-Way Shear X (lbs)	471	12,324	Passed (4% used)	LRFD	1.2D+1.6S+L
One-Way Shear Y (lbs)	471	12,324	Passed (4% used)	LRFD	1.2D+1.6S+L
Two-Way Shear (lbs)	4,103	61,947	Passed (7% used)	LRFD	1.2D+1.6S+L
Moment X (ft-lbs)	718	16,081	Passed (4% used)	LRFD	1.2D+1.6S+L
Moment Y (ft-lbs)	718	16,081	Passed (4% used)	LRFD	1.2D+1.6S+L
Crushing (lbs)	6,461	212,160	Passed (3% used)	LRFD	1.2D+1.6S+L
Depth Above Bars (in)	6	7	Passed (89% used)	code	ACI 318-14 13.3.1.2

Footing Specification

as entered on the footing, and the mat the check selected

Geometry	
Shape	Square
Column type	Concrete
Footing width	2'
Footing length	2'
Footing depth	10"
Column width	8"
Column length	8"
Pedestal height	4"
Pedestal width	4"
Pedestal length	4"

Footing Properties	
Steel yield strength	60,000 psi
Concrete strength	3,000 psi
Soil bearing pressure	1,500 psf
Concrete density	145 pcf
Top reinf. cover	3"
Bottom reinf. cover	3"
Side reinf. cover	3"
Aggregate diameter	3/4"

Soil Properties	
Soil depth above footing	0
Soil density	140 pcf
Soil cohesion	0 psf
Friction angle	30°
Water level	0

Reinforcement	
Bottom mat	Bot.(3) #4 Long, (3) #4 Short
Bars the long way	(3) #4
Bars the short way	(3) #4
Selected for	moment and minimum steel
Plain concrete (no reinforcing)	No
Override rebar	No
Include water level	No
Allow bearing pressure increase	No

- Soil bearing is checked at service level (ASD) and includes the footing's own weight; shear, moment and crushing at strength level (LRFD), ACI 318-14, loads combined to ASCE 7-16.
- Reinforcement is selected for the moment and for minimum steel (ACI 318-14: 0.0018 Ag for Grade 60), at no more than 3h or 18 in.

Applied Loads	Location	Trib. Width	Dead (0.90)	Snow (1.15)	Comments
1 - Point (lb)	--	N/A	437	3,711	Linked from: Header #26, Support 2

SpotFtg Hdr #28-1

PASSED

Spot Footing 1' 4" x 4' 6" x 10" deep -- Bot.(7) #4 Long, (2) #4 Short - 3 of the Long in the center 1.33 ft

Controls: Depth Above Bars 89% used
Adequacy 29.7% (capacity to spare)

Level: Foundation | f'c 3,000 psi | rebar Fy 60 ksi | soil 1,500 psf | Concrete column 8" x 8" | ACI 318-14

WHAT LOADS IT

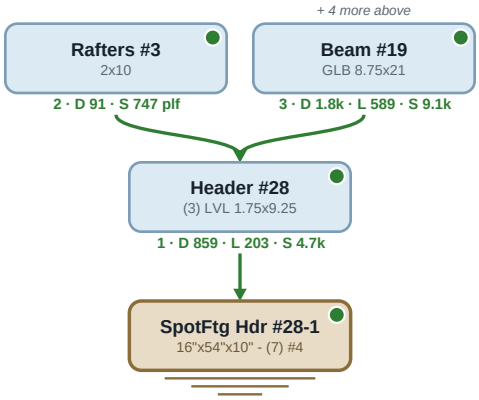

SECTION

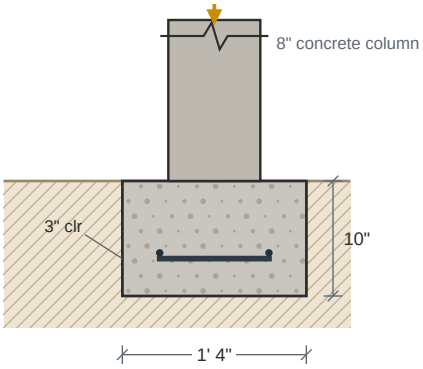

PLAN -- BOTTOM MAT

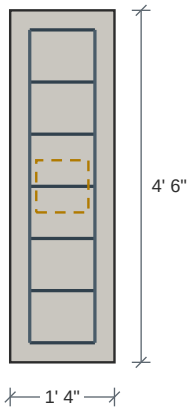

Bot.(7) #4 Long, (2) #4 Short - 3 of the Long in the center 1.33 ft

Carrying: Dead 859 lb Floor Live 203 lb Snow 4,744 lb

Design Results	Actual	Allowed	Result	Method	Load Combination
Soil Bearing Pressure (psf)	1,055	1,500	Passed (70% used)	ASD	D+S
One-Way Shear X (lbs)	2,737	8,216	Passed (33% used)	LRFD	1.2D+1.6S+L
One-Way Shear Y (lbs)	0	27,728	Passed (0% used)	LRFD	1.2D+1.6S+L
Two-Way Shear (lbs)	6,677	61,947	Passed (11% used)	LRFD	1.2D+1.6S+L
Moment X (ft-lbs)	3,602	10,721	Passed (34% used)	LRFD	1.2D+1.6S+L
Moment Y (ft-lbs)	368	37,453	Passed (1% used)	LRFD	1.2D+1.6S+L
Crushing (lbs)	8,824	212,160	Passed (4% used)	LRFD	1.2D+1.6S+L
Depth Above Bars (in)	6	7	Passed (89% used)	code	ACI 318-14 13.3.1.2

Footing Specification

as entered on the footing, and the mat the check selected

Geometry	
Shape	Square
Column type	Concrete
Footing width	1' 4"
Footing length	4' 6"
Footing depth	10"
Column width	8"
Column length	8"
Pedestal height	4"
Pedestal width	4"
Pedestal length	4"

Footing Properties	
Steel yield strength	60,000 psi
Concrete strength	3,000 psi
Soil bearing pressure	1,500 psf
Concrete density	145 pcf
Top reinf. cover	3"
Bottom reinf. cover	3"
Side reinf. cover	3"
Aggregate diameter	3/4"

Soil Properties	
Soil depth above footing	0
Soil density	140 pcf
Soil cohesion	0 psf
Friction angle	30°
Water level	0

Reinforcement	
Bottom mat	Bot.(7) #4 Long, (2) #4 Short - 3 of the Long in
Bars the long way	(7) #4
Bars the short way	(2) #4
Selected for	moment and minimum steel
Plain concrete (no reinforcing)	No
Override rebar	No
Include water level	No
Allow bearing pressure increase	No

- Soil bearing is checked at service level (ASD) and includes the footing's own weight; shear, moment and crushing at strength level (LRFD), ACI 318-14, loads combined to ASCE 7-16.
- Reinforcement is selected for the moment and for minimum steel (ACI 318-14: 0.0018 Ag for Grade 60), at no more than 3h or 18 in.

SpotFtg Hdr #28-1 (continued)

Spot Footing | 1' 4" x 4' 6" x 10" deep -- Bot.(7) #4 Long, (2) #4 Short - 3 of the Long in the center 1.33 ft

Applied Loads	Location	Trib. Width	Dead (0.90)	Floor Live (1.00)	Snow (1.15)	Comments
1 - Point (lb)	--	N/A	858.9	203.3	4,744	Linked from: Header #28, Support 1

SpotFtg Hdr #28-2

Spot Footing 3' x 3' x 10" deep -- Bot.(4) #4 Long, (4) #4 Short

Level: Foundation | f'c 3,000 psi | rebar Fy 60 ksi | soil 1,500 psf | Concrete column 8" x 8" | ACI 318-14

PASSED

Controls: Depth Above Bars 89% used

Adequacy 25.5% (capacity to spare)

WHAT LOADS IT

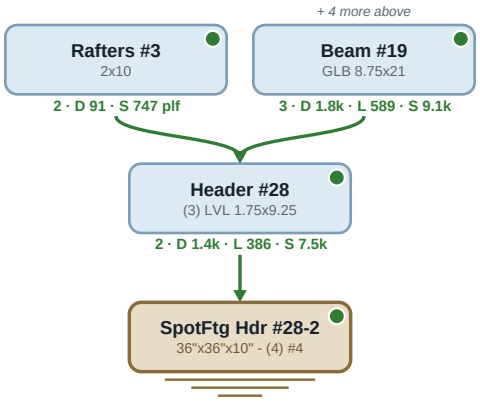

SECTION

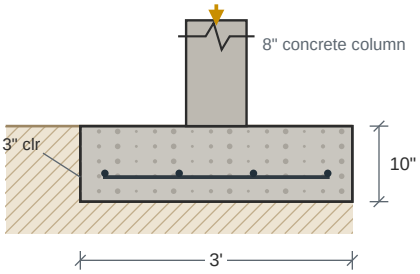

PLAN -- BOTTOM MAT

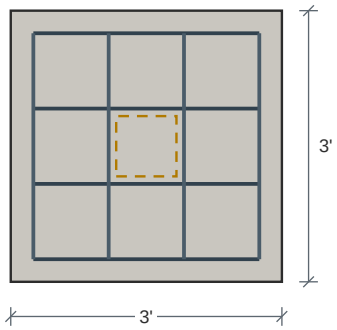

Bot.(4) #4 Long, (4) #4 Short

Carrying: Dead 1,426 lb Floor Live 386 lb Snow 7,540 lb

Design Results	Actual	Allowed	Result	Method	Load Combination
Soil Bearing Pressure (psf)	1,117	1,500	Passed (74% used)	ASD	D+S
One-Way Shear X (lbs)	3,048	18,486	Passed (16% used)	LRFD	1.2D+1.6S+L
One-Way Shear Y (lbs)	3,048	18,486	Passed (16% used)	LRFD	1.2D+1.6S+L
Two-Way Shear (lbs)	11,863	61,947	Passed (19% used)	LRFD	1.2D+1.6S+L
Moment X (ft-lbs)	3,212	21,559	Passed (15% used)	LRFD	1.2D+1.6S+L
Moment Y (ft-lbs)	3,212	21,559	Passed (15% used)	LRFD	1.2D+1.6S+L
Crushing (lbs)	14,161	212,160	Passed (7% used)	LRFD	1.2D+1.6S+L
Depth Above Bars (in)	6	7	Passed (89% used)	code	ACI 318-14 13.3.1.2

Footing Specification

as entered on the footing, and the mat the check selected

Geometry	
Shape	Square
Column type	Concrete
Footing width	3'
Footing length	3'
Footing depth	10"
Column width	8"
Column length	8"
Pedestal height	4"
Pedestal width	4"
Pedestal length	4"

Footing Properties	
Steel yield strength	60,000 psi
Concrete strength	3,000 psi
Soil bearing pressure	1,500 psf
Concrete density	145 pcf
Top reinf. cover	3"
Bottom reinf. cover	3"
Side reinf. cover	3"
Aggregate diameter	3/4"

Soil Properties	
Soil depth above footing	0
Soil density	140 pcf
Soil cohesion	0 psf
Friction angle	30°
Water level	0

Reinforcement	
Bottom mat	Bot.(4) #4 Long, (4) #4 Short
Bars the long way	(4) #4
Bars the short way	(4) #4
Selected for	moment and minimum steel
Plain concrete (no reinforcing)	No
Override rebar	No
Include water level	No
Allow bearing pressure increase	No

- Soil bearing is checked at service level (ASD) and includes the footing's own weight; shear, moment and crushing at strength level (LRFD), ACI 318-14, loads combined to ASCE 7-16.
- Reinforcement is selected for the moment and for minimum steel (ACI 318-14: 0.0018 Ag for Grade 60), at no more than 3h or 18 in.

Applied Loads	Location	Trib. Width	Dead (0.90)	Floor Live (1.00)	Snow (1.15)	Comments
1 - Point (lb)	--	N/A	1,426	386.2	7,540	Linked from: Header #28, Support 2

SpotFtg Hdr #29-1

PASSED

Spot Footing 3' x 3' x 10" deep -- Bot.(4) #4 Long, (4) #4 Short

Level: Foundation | f'c 3,000 psi | rebar Fy 60 ksi | soil 1,500 psf | Concrete column 8" x 8" | ACI 318-14

Controls: Soil Bearing Pressure 98% used
Adequacy 2.2% (capacity to spare)

WHAT LOADS IT

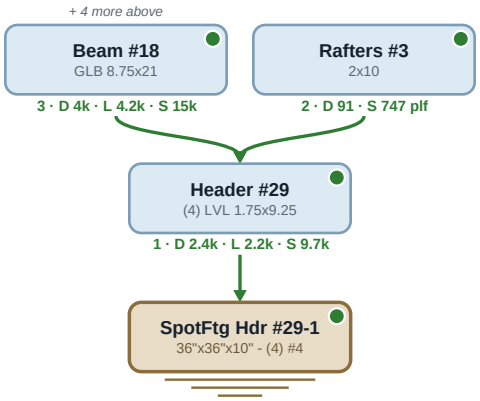

SECTION

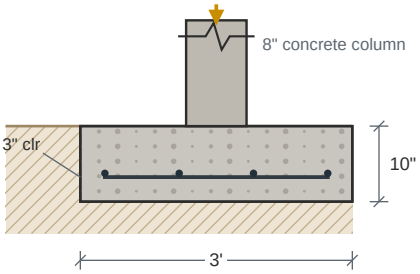

PLAN -- BOTTOM MAT

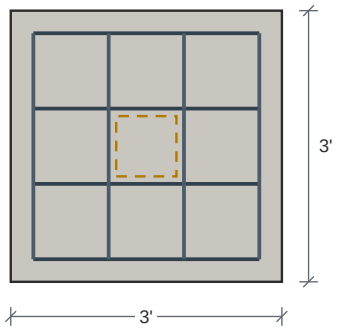

Bot.(4) #4 Long, (4) #4 Short

Carrying: Dead 2,380 lb Floor Live 2,224 lb Snow 9,729 lb

Design Results	Actual	Allowed	Result	Method	Load Combination
Soil Bearing Pressure (psf)	1,466	1,500	Passed (98% used)	ASD	D+S
One-Way Shear X (lbs)	4,445	18,486	Passed (24% used)	LRFD	1.2D+1.6S+L
One-Way Shear Y (lbs)	4,445	18,486	Passed (24% used)	LRFD	1.2D+1.6S+L
Two-Way Shear (lbs)	17,298	61,947	Passed (28% used)	LRFD	1.2D+1.6S+L
Moment X (ft-lbs)	4,684	21,559	Passed (22% used)	LRFD	1.2D+1.6S+L
Moment Y (ft-lbs)	4,684	21,559	Passed (22% used)	LRFD	1.2D+1.6S+L
Crushing (lbs)	20,647	212,160	Passed (10% used)	LRFD	1.2D+1.6S+L
Depth Above Bars (in)	6	7	Passed (89% used)	code	ACI 318-14 13.3.1.2

Footing Specification

as entered on the footing, and the mat the check selected

Geometry	
Shape	Square
Column type	Concrete
Footing width	3'
Footing length	3'
Footing depth	10"
Column width	8"
Column length	8"
Pedestal height	4"
Pedestal width	4"
Pedestal length	4"

Footing Properties	
Steel yield strength	60,000 psi
Concrete strength	3,000 psi
Soil bearing pressure	1,500 psf
Concrete density	145 pcf
Top reinf. cover	3"
Bottom reinf. cover	3"
Side reinf. cover	3"
Aggregate diameter	3/4"

Soil Properties	
Soil depth above footing	0
Soil density	140 pcf
Soil cohesion	0 psf
Friction angle	30°
Water level	0

Reinforcement	
Bottom mat	Bot.(4) #4 Long, (4) #4 Short
Bars the long way	(4) #4
Bars the short way	(4) #4
Selected for	moment and minimum steel
Plain concrete (no reinforcing)	No
Override rebar	No
Include water level	No
Allow bearing pressure increase	No

- Soil bearing is checked at service level (ASD) and includes the footing's own weight; shear, moment and crushing at strength level (LRFD), ACI 318-14, loads combined to ASCE 7-16.
- Reinforcement is selected for the moment and for minimum steel (ACI 318-14: 0.0018 Ag for Grade 60), at no more than 3h or 18 in.

Applied Loads	Location	Trib. Width	Dead (0.90)	Floor Live (1.00)	Snow (1.15)	Comments
1 - Point (lb)	--	N/A	2,380	2,224	9,729	Linked from: Header #29, Support 1

SpotFtg Hdr #29-2

Spot Footing 3' x 3' x 10" deep -- Bot.(4) #4 Long, (4) #4 Short

Level: Foundation | f'c 3,000 psi | rebar Fy 60 ksi | soil 1,500 psf | Concrete column 8" x 8" | ACI 318-14

PASSED

Controls: Soil Bearing Pressure 90% used

Adequacy 9.9% (capacity to spare)

WHAT LOADS IT

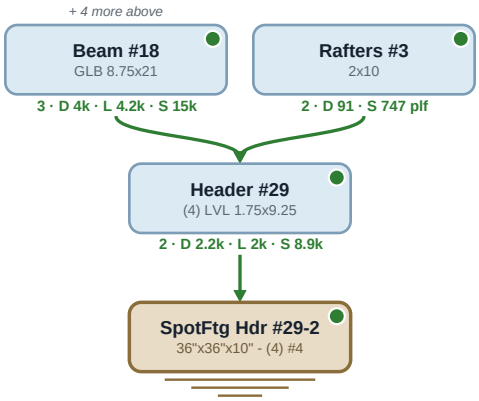

SECTION

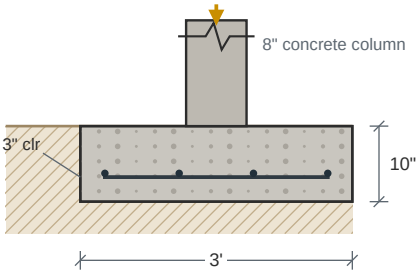

PLAN -- BOTTOM MAT

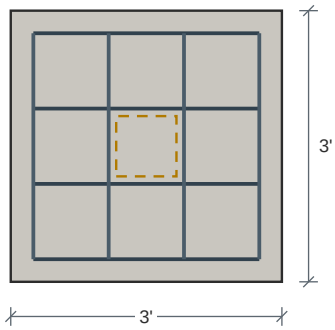

Bot.(4) #4 Long, (4) #4 Short

Carrying: Dead 2,162 lb Floor Live 1,995 lb Snow 8,916 lb

Design Results	Actual	Allowed	Result	Method	Load Combination
Soil Bearing Pressure (psf)	1,352	1,500	Passed (90% used)	ASD	D+S
One-Way Shear X (lbs)	4,059	18,486	Passed (22% used)	LRFD	1.2D+1.6S+L
One-Way Shear Y (lbs)	4,059	18,486	Passed (22% used)	LRFD	1.2D+1.6S+L
Two-Way Shear (lbs)	15,796	61,947	Passed (25% used)	LRFD	1.2D+1.6S+L
Moment X (ft-lbs)	4,277	21,559	Passed (20% used)	LRFD	1.2D+1.6S+L
Moment Y (ft-lbs)	4,277	21,559	Passed (20% used)	LRFD	1.2D+1.6S+L
Crushing (lbs)	18,855	212,160	Passed (9% used)	LRFD	1.2D+1.6S+L
Depth Above Bars (in)	6	7	Passed (89% used)	code	ACI 318-14 13.3.1.2

Footing Specification

as entered on the footing, and the mat the check selected

Geometry	
Shape	Square
Column type	Concrete
Footing width	3'
Footing length	3'
Footing depth	10"
Column width	8"
Column length	8"
Pedestal height	4"
Pedestal width	4"
Pedestal length	4"

Footing Properties	
Steel yield strength	60,000 psi
Concrete strength	3,000 psi
Soil bearing pressure	1,500 psf
Concrete density	145 pcf
Top reinf. cover	3"
Bottom reinf. cover	3"
Side reinf. cover	3"
Aggregate diameter	3/4"

Soil Properties	
Soil depth above footing	0
Soil density	140 pcf
Soil cohesion	0 psf
Friction angle	30°
Water level	0

Reinforcement	
Bottom mat	Bot.(4) #4 Long, (4) #4 Short
Bars the long way	(4) #4
Bars the short way	(4) #4
Selected for	moment and minimum steel
Plain concrete (no reinforcing)	No
Override rebar	No
Include water level	No
Allow bearing pressure increase	No

- Soil bearing is checked at service level (ASD) and includes the footing's own weight; shear, moment and crushing at strength level (LRFD), ACI 318-14, loads combined to ASCE 7-16.
- Reinforcement is selected for the moment and for minimum steel (ACI 318-14: 0.0018 Ag for Grade 60), at no more than 3h or 18 in.

Applied Loads	Location	Trib. Width	Dead (0.90)	Floor Live (1.00)	Snow (1.15)	Comments
1 - Point (lb)	--	N/A	2,162	1,995	8,916	Linked from: Header #29, Support 2

SpotFtg Hdr #30-1

PASSED

Spot Footing 3' 6" x 3' 6" x 10" deep -- Bot.(4) #4 Long, (4) #4 Short

Level: Foundation | f'c 3,000 psi | rebar Fy 60 ksi | soil 1,500 psf | Concrete column 8" x 8" | ACI 318-14

Controls: Depth Above Bars 89% used
Adequacy 20.9% (capacity to spare)

WHAT LOADS IT

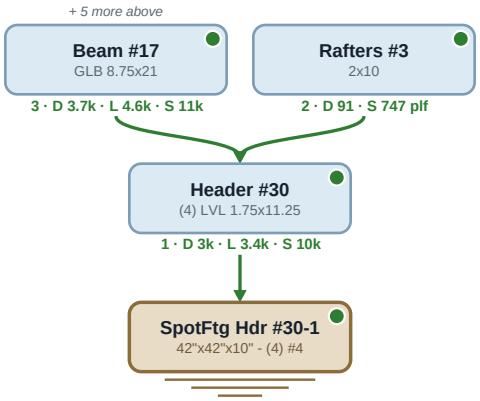

SECTION

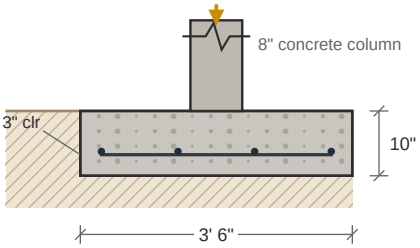

PLAN -- BOTTOM MAT

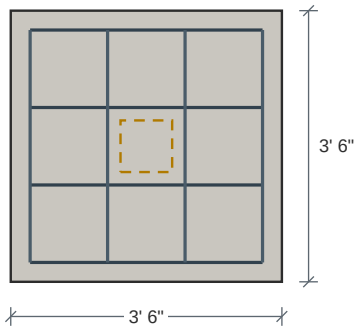

Bot.(4) #4 Long, (4) #4 Short

Carrying: Dead 3,019 lb Floor Live 3,414 lb Snow 9,972 lb

Design Results	Actual	Allowed	Result	Method	Load Combination
Soil Bearing Pressure (psf)	1,187	1,500	Passed (79% used)	ASD	D+0.75L+0.75S
One-Way Shear X (lbs)	5,885	21,567	Passed (27% used)	LRFD	1.2D+1.6S+L
One-Way Shear Y (lbs)	5,885	21,567	Passed (27% used)	LRFD	1.2D+1.6S+L
Two-Way Shear (lbs)	20,252	61,947	Passed (33% used)	LRFD	1.2D+1.6S+L
Moment X (ft-lbs)	6,592	21,693	Passed (30% used)	LRFD	1.2D+1.6S+L
Moment Y (ft-lbs)	6,592	21,693	Passed (30% used)	LRFD	1.2D+1.6S+L
Crushing (lbs)	22,992	212,160	Passed (11% used)	LRFD	1.2D+1.6S+L
Depth Above Bars (in)	6	7	Passed (89% used)	code	ACI 318-14 13.3.1.2

Footing Specification

as entered on the footing, and the mat the check selected

Geometry	
Shape	Square
Column type	Concrete
Footing width	3' 6"
Footing length	3' 6"
Footing depth	10"
Column width	8"
Column length	8"
Pedestal height	4"
Pedestal width	4"
Pedestal length	4"

Footing Properties	
Steel yield strength	60,000 psi
Concrete strength	3,000 psi
Soil bearing pressure	1,500 psf
Concrete density	145 pcf
Top reinf. cover	3"
Bottom reinf. cover	3"
Side reinf. cover	3"
Aggregate diameter	3/4"

Soil Properties	
Soil depth above footing	0
Soil density	140 pcf
Soil cohesion	0 psf
Friction angle	30°
Water level	0

Reinforcement	
Bottom mat	Bot.(4) #4 Long, (4) #4 Short
Bars the long way	(4) #4
Bars the short way	(4) #4
Selected for	moment and minimum steel
Plain concrete (no reinforcing)	No
Override rebar	No
Include water level	No
Allow bearing pressure increase	No

- Soil bearing is checked at service level (ASD) and includes the footing's own weight; shear, moment and crushing at strength level (LRFD), ACI 318-14, loads combined to ASCE 7-16.
- Reinforcement is selected for the moment and for minimum steel (ACI 318-14: 0.0018 Ag for Grade 60), at no more than 3h or 18 in.

Applied Loads	Location	Trib. Width	Dead (0.90)	Floor Live (1.00)	Snow (1.15)	Comments
1 - Point (lb)	--	N/A	3,019	3,414	9,972	Linked from: Header #30, Support 1

SpotFtg Hdr #30-2

PASSED

Spot Footing 1' 4" x 4' 6" x 10" deep -- Bot.(7) #4 Long, (2) #4 Short - 3 of the Long in the center 1.33 ft

Controls: Depth Above Bars 89% used
Adequacy 28% (capacity to spare)

Level: Foundation | f'c 3,000 psi | rebar Fy 60 ksi | soil 1,500 psf | Concrete column 8" x 8" | ACI 318-14

WHAT LOADS IT

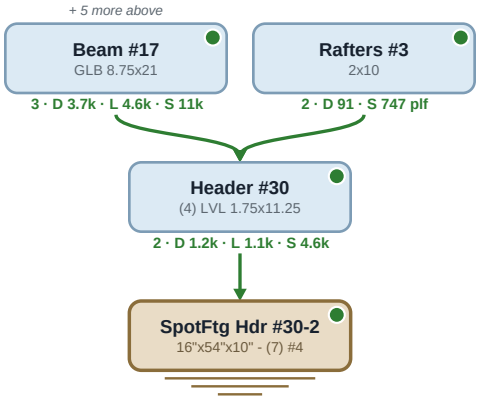

SECTION

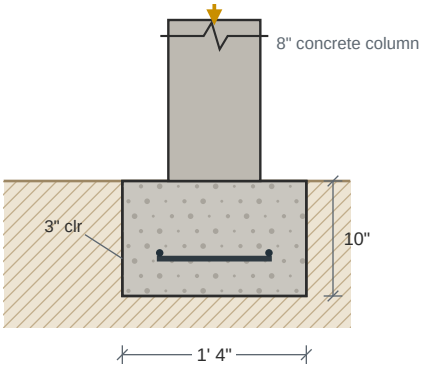

PLAN -- BOTTOM MAT

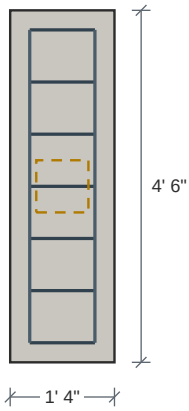

Bot.(7) #4 Long, (2) #4 Short - 3 of the Long in the center 1.33 ft

Carrying: Dead 1,197 lb Floor Live 1,147 lb Snow 4,559 lb

Design Results	Actual	Allowed	Result	Method	Load Combination
Soil Bearing Pressure (psf)	1,080	1,500	Passed (72% used)	ASD	D+S
One-Way Shear X (lbs)	3,064	8,216	Passed (37% used)	LRFD	1.2D+1.6S+L
One-Way Shear Y (lbs)	0	27,728	Passed (0% used)	LRFD	1.2D+1.6S+L
Two-Way Shear (lbs)	7,474	61,947	Passed (12% used)	LRFD	1.2D+1.6S+L
Moment X (ft-lbs)	4,032	10,721	Passed (38% used)	LRFD	1.2D+1.6S+L
Moment Y (ft-lbs)	412	37,453	Passed (1% used)	LRFD	1.2D+1.6S+L
Crushing (lbs)	9,878	212,160	Passed (5% used)	LRFD	1.2D+1.6S+L
Depth Above Bars (in)	6	7	Passed (89% used)	code	ACI 318-14 13.3.1.2

Footing Specification

as entered on the footing, and the mat the check selected

Geometry	
Shape	Square
Column type	Concrete
Footing width	1' 4"
Footing length	4' 6"
Footing depth	10"
Column width	8"
Column length	8"
Pedestal height	4"
Pedestal width	4"
Pedestal length	4"

Footing Properties	
Steel yield strength	60,000 psi
Concrete strength	3,000 psi
Soil bearing pressure	1,500 psf
Concrete density	145 pcf
Top reinf. cover	3"
Bottom reinf. cover	3"
Side reinf. cover	3"
Aggregate diameter	3/4"

Soil Properties	
Soil depth above footing	0
Soil density	140 pcf
Soil cohesion	0 psf
Friction angle	30°
Water level	0

Reinforcement	
Bottom mat	Bot.(7) #4 Long, (2) #4 Short - 3 of the Long in
Bars the long way	(7) #4
Bars the short way	(2) #4
Selected for	moment and minimum steel
Plain concrete (no reinforcing)	No
Override rebar	No
Include water level	No
Allow bearing pressure increase	No

- Soil bearing is checked at service level (ASD) and includes the footing's own weight; shear, moment and crushing at strength level (LRFD), ACI 318-14, loads combined to ASCE 7-16.
- Reinforcement is selected for the moment and for minimum steel (ACI 318-14: 0.0018 Ag for Grade 60), at no more than 3h or 18 in.

SpotFtg Hdr #30-2 (continued)

Spot Footing | 1' 4" x 4' 6" x 10" deep -- Bot.(7) #4 Long, (2) #4 Short - 3 of the Long in the center 1.33 ft

Applied Loads	Location	Trib. Width	Dead (0.90)	Floor Live (1.00)	Snow (1.15)	Comments
1 - Point (lb)	--	N/A	1,197	1,147	4,559	Linked from: Header #30, Support 2

SpotFtg Hdr #31-1

Spot Footing 4' x 4' x 10" deep -- Bot.(5) #4 Long, (5) #4 Short

Level: Foundation | f'c 3,000 psi | rebar Fy 60 ksi | soil 1,500 psf | Wood column 5 1/2" x 5 1/2" | ACI 318-14

PASSED

Controls: Depth Above Bars 89% used
Adequacy 18.8% (capacity to spare)

WHAT LOADS IT

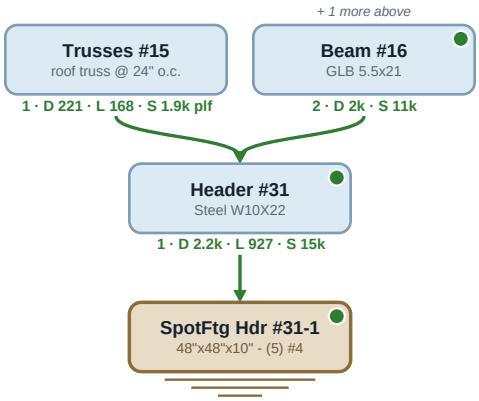

SECTION

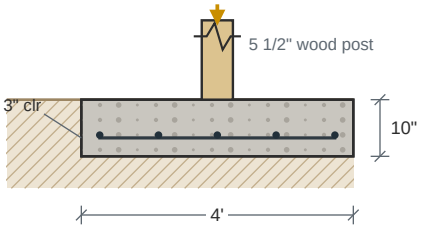

PLAN -- BOTTOM MAT

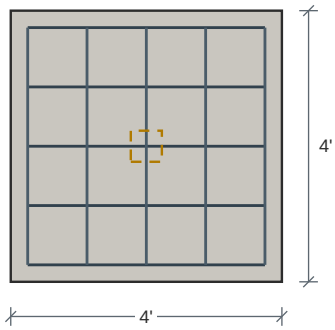

Bot.(5) #4 Long, (5) #4 Short

Carrying: Dead 2,161 lb Floor Live 927 lb Snow 15,402 lb

Design Results	Actual	Allowed	Result	Method	Load Combination
Soil Bearing Pressure (psf)	1,219	1,500	Passed (81% used)	ASD	D+S
One-Way Shear X (lbs)	8,801	24,648	Passed (36% used)	LRFD	1.2D+1.6S+L
One-Way Shear Y (lbs)	8,801	24,648	Passed (36% used)	LRFD	1.2D+1.6S+L
Two-Way Shear (lbs)	26,403	51,267	Passed (52% used)	LRFD	1.2D+1.6S+L
Moment X (ft-lbs)	12,514	27,022	Passed (46% used)	LRFD	1.2D+1.6S+L
Moment Y (ft-lbs)	12,514	27,022	Passed (46% used)	LRFD	1.2D+1.6S+L
Crushing (lbs)	28,163	100,279	Passed (28% used)	LRFD	1.2D+1.6S+L
Depth Above Bars (in)	6	7	Passed (89% used)	code	ACI 318-14 13.3.1.2

Footing Specification

as entered on the footing, and the mat the check selected

Geometry	
Shape	Square
Column type	Wood
Footing width	4'
Footing length	4'
Footing depth	10"
Column width	5 1/2"
Column length	5 1/2"
Pedestal height	4"
Pedestal width	4"
Pedestal length	4"

Footing Properties	
Steel yield strength	60,000 psi
Concrete strength	3,000 psi
Soil bearing pressure	1,500 psf
Concrete density	145 pcf
Top reinf. cover	3"
Bottom reinf. cover	3"
Side reinf. cover	3"
Aggregate diameter	3/4"

Soil Properties	
Soil depth above footing	0
Soil density	140 pcf
Soil cohesion	0 psf
Friction angle	30°
Water level	0

Reinforcement	
Bottom mat	Bot.(5) #4 Long, (5) #4 Short
Bars the long way	(5) #4
Bars the short way	(5) #4
Selected for	moment and minimum steel
Plain concrete (no reinforcing)	No
Override rebar	No
Include water level	No
Allow bearing pressure increase	No

- Soil bearing is checked at service level (ASD) and includes the footing's own weight; shear, moment and crushing at strength level (LRFD), ACI 318-14, loads combined to ASCE 7-16.
- Reinforcement is selected for the moment and for minimum steel (ACI 318-14: 0.0018 Ag for Grade 60), at no more than 3h or 18 in.
- Wood post: check bearing on the post itself, its Fc-perp can govern below the concrete value.

Applied Loads	Location	Trib. Width	Dead (0.90)	Floor Live (1.00)	Snow (1.15)	Comments
1 - Point (lb)	--	N/A	2,161	927.1	15,402	Linked from: Header #31, Support 1

SpotFtg Hdr #31-2

PASSED

Spot Footing 4' 6" x 6' x 10" deep -- Bot.(8) #4 Long, (7) #4 Short - 6 of the Long in the center 4.5 ft

Controls: Depth Above Bars 89% used
Adequacy 12.2% (capacity to spare)

Level: Foundation | f'c 3,000 psi | rebar Fy 60 ksi | soil 1,500 psf | Wood column 5 1/2" x 5 1/2" | ACI 318-14

WHAT LOADS IT

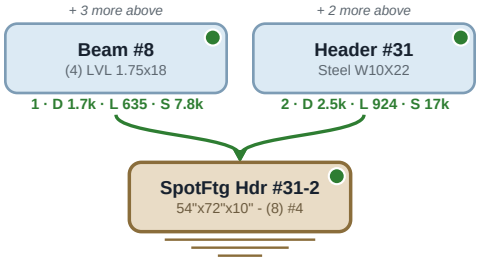

SECTION

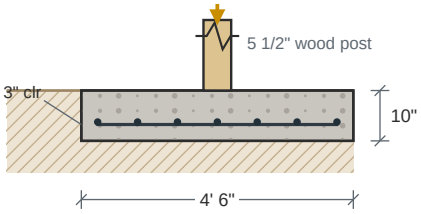

PLAN -- BOTTOM MAT

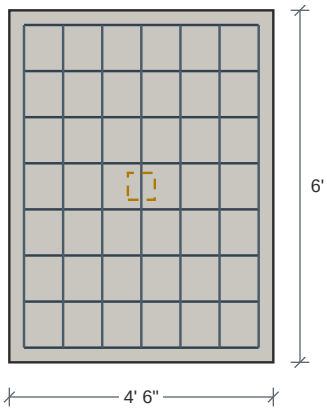

Bot.(8) #4 Long, (7) #4 Short - 6 of the Long in the center 4.5 ft

Carrying: Dead 4,191 lb Floor Live 1,558 lb Snow 25,092 lb

Design Results	Actual	Allowed	Result	Method	Load Combination
Soil Bearing Pressure (psf)	1,205	1,500	Passed (80% used)	ASD	D+S
One-Way Shear X (lbs)	17,526	27,728	Passed (63% used)	LRFD	1.2D+1.6S+L
One-Way Shear Y (lbs)	15,578	36,971	Passed (42% used)	LRFD	1.2D+1.6S+L
Two-Way Shear (lbs)	45,004	51,267	Passed (88% used)	LRFD	1.2D+1.6S+L
Moment X (ft-lbs)	32,425	37,453	Passed (87% used)	LRFD	1.2D+1.6S+L
Moment Y (ft-lbs)	23,679	43,118	Passed (55% used)	LRFD	1.2D+1.6S+L
Crushing (lbs)	46,735	100,279	Passed (47% used)	LRFD	1.2D+1.6S+L
Depth Above Bars (in)	6	7	Passed (89% used)	code	ACI 318-14 13.3.1.2

Footing Specification

as entered on the footing, and the mat the check selected

Geometry	
Shape	Square
Column type	Wood
Footing width	4' 6"
Footing length	6'
Footing depth	10"
Column width	5 1/2"
Column length	5 1/2"
Pedestal height	4"
Pedestal width	4"
Pedestal length	4"

Footing Properties	
Steel yield strength	60,000 psi
Concrete strength	3,000 psi
Soil bearing pressure	1,500 psf
Concrete density	145 pcf
Top reinf. cover	3"
Bottom reinf. cover	3"
Side reinf. cover	3"
Aggregate diameter	3/4"

Soil Properties	
Soil depth above footing	0
Soil density	140 pcf
Soil cohesion	0 psf
Friction angle	30°
Water level	0

Reinforcement	
Bottom mat	Bot.(8) #4 Long, (7) #4 Short - 6 of the Long in
Bars the long way	(8) #4
Bars the short way	(7) #4
Selected for	moment and minimum steel
Plain concrete (no reinforcing)	No
Override rebar	No
Include water level	No
Allow bearing pressure increase	No

- Soil bearing is checked at service level (ASD) and includes the footing's own weight; shear, moment and crushing at strength level (LRFD), ACI 318-14, loads combined to ASCE 7-16.
- Reinforcement is selected for the moment and for minimum steel (ACI 318-14: 0.0018 Ag for Grade 60), at no more than 3h or 18 in.
- Wood post: check bearing on the post itself, its Fc-perp can govern below the concrete value.

SpotFtg Hdr #31-2 (continued)

Spot Footing | 4' 6" x 6' x 10" deep -- Bot.(8) #4 Long, (7) #4 Short - 6 of the Long in the center 4.5 ft

Applied Loads	Location	Trib. Width	Dead (0.90)	Floor Live (1.00)	Snow (1.15)	Comments
1 - Point (lb)	--	N/A	2,501	923.9	17,327	Linked from: Header #31, Support 2
2 - Point (lb)	--	N/A	1,691	634.6	7,765	Linked from: Beam #8, Support 1

SpotFtg Hdr #36-1

Spot Footing 6' x 6' x 12" deep -- Bot.(8) #4 Long, (8) #4 Short

Level: Foundation | f'c 3,000 psi | rebar Fy 60 ksi | soil 1,500 psf | Wood column 5 1/2" x 5 1/2" | ACI 318-14

PASSED

Controls: Two-Way Shear 94% used
Adequacy 6.4% (capacity to spare)

WHAT LOADS IT

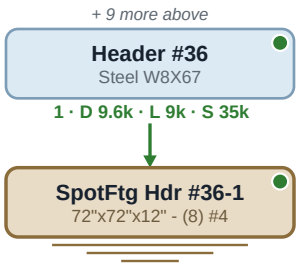

SECTION

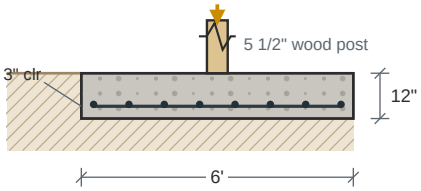

PLAN -- BOTTOM MAT

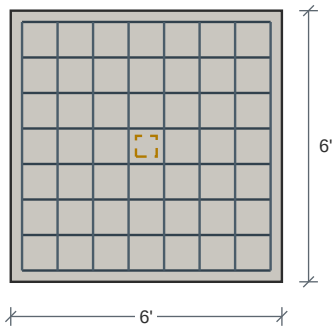

Bot.(8) #4 Long, (8) #4 Short

Carrying: Dead 9,567 lb Floor Live 8,963 lb Snow 34,759 lb

Design Results	Actual	Allowed	Result	Method	Load Combination
Soil Bearing Pressure (psf)	1,376	1,500	Passed (92% used)	ASD	D+S
One-Way Shear X (lbs)	26,409	48,802	Passed (54% used)	LRFD	1.2D+1.6S+L
One-Way Shear Y (lbs)	26,409	48,802	Passed (54% used)	LRFD	1.2D+1.6S+L
Two-Way Shear (lbs)	73,183	78,215	Passed (94% used)	LRFD	1.2D+1.6S+L
Moment X (ft-lbs)	52,770	57,518	Passed (92% used)	LRFD	1.2D+1.6S+L
Moment Y (ft-lbs)	52,770	57,518	Passed (92% used)	LRFD	1.2D+1.6S+L
Crushing (lbs)	76,059	100,279	Passed (76% used)	LRFD	1.2D+1.6S+L
Depth Above Bars (in)	6	9	Passed (69% used)	code	ACI 318-14 13.3.1.2

Footing Specification

as entered on the footing, and the mat the check selected

Geometry	
Shape	Square
Column type	Wood
Footing width	6'
Footing length	6'
Footing depth	12"
Column width	5 1/2"
Column length	5 1/2"
Pedestal height	4"
Pedestal width	4"
Pedestal length	4"

Footing Properties	
Steel yield strength	60,000 psi
Concrete strength	3,000 psi
Soil bearing pressure	1,500 psf
Concrete density	145 pcf
Top reinf. cover	3"
Bottom reinf. cover	3"
Side reinf. cover	3"
Aggregate diameter	3/4"

Soil Properties	
Soil depth above footing	0
Soil density	140 pcf
Soil cohesion	0 psf
Friction angle	30°
Water level	0

Reinforcement	
Bottom mat	Bot.(8) #4 Long, (8) #4 Short
Bars the long way	(8) #4
Bars the short way	(8) #4
Selected for	moment and minimum steel
Plain concrete (no reinforcing)	No
Override rebar	No
Include water level	No
Allow bearing pressure increase	No

- Soil bearing is checked at service level (ASD) and includes the footing's own weight; shear, moment and crushing at strength level (LRFD), ACI 318-14, loads combined to ASCE 7-16.
- Reinforcement is selected for the moment and for minimum steel (ACI 318-14: 0.0018 Ag for Grade 60), at no more than 3h or 18 in.
- Wood post: check bearing on the post itself, its Fc-perp can govern below the concrete value.

Applied Loads	Location	Trib. Width	Dead (0.90)	Floor Live (1.00)	Snow (1.15)	Comments
1 - Point (lb)	--	N/A	9,567	8,963	34,759	Linked from: Header #36, Support 1

SpotFtg Hdr #36-2

Spot Footing 6' x 6' x 12" deep -- Bot.(8) #4 Long, (8) #4 Short

Level: Foundation | f'c 3,000 psi | rebar Fy 60 ksi | soil 1,500 psf | Wood column 5 1/2" x 5 1/2" | ACI 318-14

PASSED

Controls: Soil Bearing Pressure 95% used

Adequacy 5.1% (capacity to spare)

WHAT LOADS IT

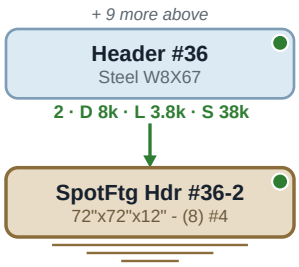

SECTION

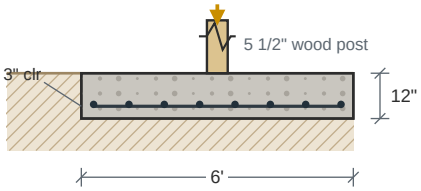

PLAN -- BOTTOM MAT

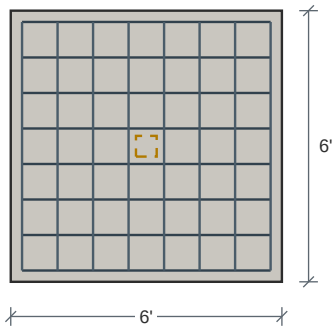

Bot.(8) #4 Long, (8) #4 Short

Carrying: Dead 7,971 lb Floor Live 3,814 lb Snow 38,052 lb

Design Results	Actual	Allowed	Result	Method	Load Combination
Soil Bearing Pressure (psf)	1,423	1,500	Passed (95% used)	ASD	D+S
One-Way Shear X (lbs)	25,786	48,802	Passed (53% used)	LRFD	1.2D+1.6S+L
One-Way Shear Y (lbs)	25,786	48,802	Passed (53% used)	LRFD	1.2D+1.6S+L
Two-Way Shear (lbs)	71,455	78,215	Passed (91% used)	LRFD	1.2D+1.6S+L
Moment X (ft-lbs)	51,523	57,518	Passed (90% used)	LRFD	1.2D+1.6S+L
Moment Y (ft-lbs)	51,523	57,518	Passed (90% used)	LRFD	1.2D+1.6S+L
Crushing (lbs)	74,262	100,279	Passed (74% used)	LRFD	1.2D+1.6S+L
Depth Above Bars (in)	6	9	Passed (69% used)	code	ACI 318-14 13.3.1.2

Footing Specification

as entered on the footing, and the mat the check selected

Geometry	
Shape	Square
Column type	Wood
Footing width	6'
Footing length	6'
Footing depth	12"
Column width	5 1/2"
Column length	5 1/2"
Pedestal height	4"
Pedestal width	4"
Pedestal length	4"

Footing Properties	
Steel yield strength	60,000 psi
Concrete strength	3,000 psi
Soil bearing pressure	1,500 psf
Concrete density	145 pcf
Top reinf. cover	3"
Bottom reinf. cover	3"
Side reinf. cover	3"
Aggregate diameter	3/4"

Soil Properties	
Soil depth above footing	0
Soil density	140 pcf
Soil cohesion	0 psf
Friction angle	30°
Water level	0

Reinforcement	
Bottom mat	Bot.(8) #4 Long, (8) #4 Short
Bars the long way	(8) #4
Bars the short way	(8) #4
Selected for	moment and minimum steel
Plain concrete (no reinforcing)	No
Override rebar	No
Include water level	No
Allow bearing pressure increase	No

- Soil bearing is checked at service level (ASD) and includes the footing's own weight; shear, moment and crushing at strength level (LRFD), ACI 318-14, loads combined to ASCE 7-16.
- Reinforcement is selected for the moment and for minimum steel (ACI 318-14: 0.0018 Ag for Grade 60), at no more than 3h or 18 in.
- Wood post: check bearing on the post itself, its Fc-perp can govern below the concrete value.

Applied Loads	Location	Trib. Width	Dead (0.90)	Floor Live (1.00)	Snow (1.15)	Comments
1 - Point (lb)	--	N/A	7,971	3,814	38,052	Linked from: Header #36, Support 2

SpotFtg Hdr #37-1

Spot Footing 2' 6" x 2' 6" x 10" deep -- Unreinforced (Plain)

Level: Foundation | f'c 3,000 psi | rebar Fy 60 ksi | soil 1,500 psf | Wood column 8" x 8" | ACI 318-14

PASSED

Controls: Minimum Thickness 80% used

Adequacy 28.9% (capacity to spare)

WHAT LOADS IT

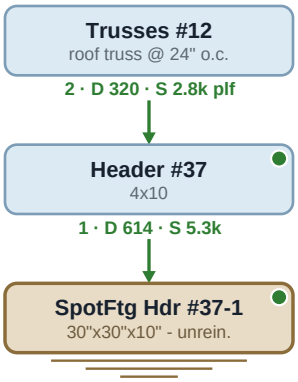

SECTION

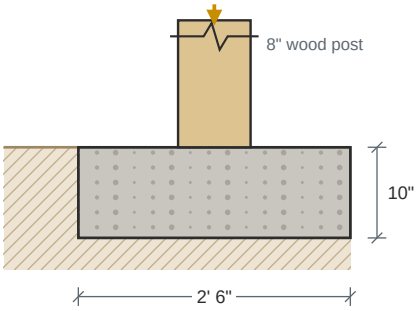

PLAN -- PLAIN CONCRETE, NO REINFORCING

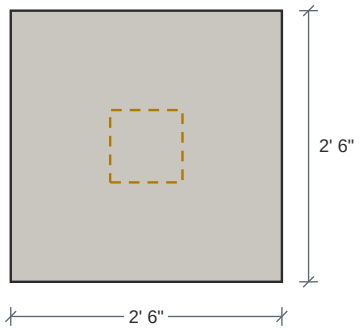

Unreinforced (Plain)

Carrying: Dead 614 lb Snow 5,299 lb

Design Results	Actual	Allowed	Result	Method	Load Combination
Soil Bearing Pressure (psf)	1,067	1,500	Passed (71% used)	ASD	D+S
One-Way Shear X (lbs)	921	10,516	Passed (9% used)	LRFD	1.2D+1.6S+L
One-Way Shear Y (lbs)	921	10,516	Passed (9% used)	LRFD	1.2D+1.6S+L
Two-Way Shear (lbs)	6,594	44,757	Passed (15% used)	LRFD	1.2D+1.6S+L
Moment X (ft-lbs)	2,163	4,382	Passed (49% used)	LRFD	1.2D+1.6S+L
Moment Y (ft-lbs)	2,163	4,382	Passed (49% used)	LRFD	1.2D+1.6S+L
Crushing (lbs)	9,215	195,840	Passed (5% used)	LRFD	1.2D+1.6S+L
Minimum Thickness (in)	8	10	Passed (80% used)	code	ACI 318-14 Ch. 14

Footing Specification

as entered on the footing, and the mat the check selected

Geometry	
Shape	Square
Column type	Wood
Footing width	2' 6"
Footing length	2' 6"
Footing depth	10"
Column width	8"
Column length	8"
Pedestal height	4"
Pedestal width	4"
Pedestal length	4"

Footing Properties	
Steel yield strength	60,000 psi
Concrete strength	3,000 psi
Soil bearing pressure	1,500 psf
Concrete density	145 pcf
Top reinf. cover	3"
Bottom reinf. cover	3"
Side reinf. cover	3"
Aggregate diameter	3/4"

Soil Properties	
Soil depth above footing	0
Soil density	140 pcf
Soil cohesion	0 psf
Friction angle	30°
Water level	0

Reinforcement	
Reinforcing	none -- plain concrete
Plain concrete (no reinforcing)	Yes
Override rebar	No
Include water level	No
Allow bearing pressure increase	No

- Soil bearing is checked at service level (ASD) and includes the footing's own weight; shear, moment and crushing at strength level (LRFD), ACI 318-14, loads combined to ASCE 7-16.
- Reinforcement is selected for the moment and for minimum steel (ACI 318-14: 0.0018 Ag for Grade 60), at no more than 3h or 18 in.
- Wood post: check bearing on the post itself, its Fc-perp can govern below the concrete value.

Applied Loads	Location	Trib. Width	Dead (0.90)	Snow (1.15)	Comments
1 - Point (lb)	--	N/A	614.3	5,299	Linked from: Header #37, Support 1

SpotFtg Hdr #37-2

Spot Footing 2' 6" x 2' 6" x 10" deep -- Unreinforced (Plain)

Level: Foundation | f'c 3,000 psi | rebar Fy 60 ksi | soil 1,500 psf | Concrete column 8" x 8" | ACI 318-14

PASSED

Controls: Minimum Thickness 80% used

Adequacy 28.9% (capacity to spare)

WHAT LOADS IT

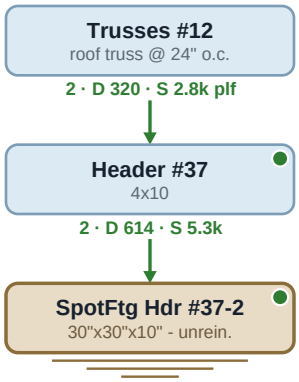

SECTION

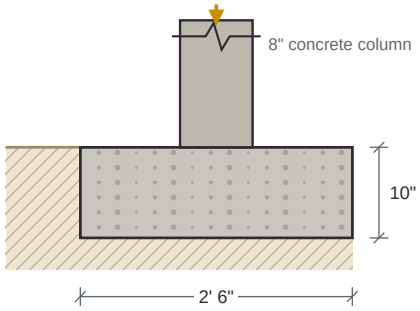

PLAN -- PLAIN CONCRETE, NO REINFORCING

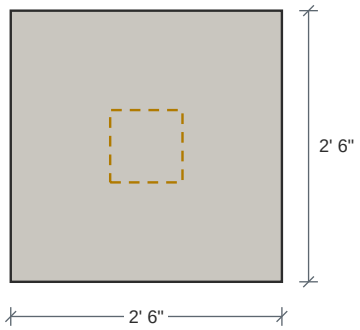

Unreinforced (Plain)

Carrying: Dead 614 lb Snow 5,299 lb

Design Results	Actual	Allowed	Result	Method	Load Combination
Soil Bearing Pressure (psf)	1,067	1,500	Passed (71% used)	ASD	D+S
One-Way Shear X (lbs)	921	10,516	Passed (9% used)	LRFD	1.2D+1.6S+L
One-Way Shear Y (lbs)	921	10,516	Passed (9% used)	LRFD	1.2D+1.6S+L
Two-Way Shear (lbs)	6,594	44,757	Passed (15% used)	LRFD	1.2D+1.6S+L
Moment X (ft-lbs)	1,549	4,382	Passed (35% used)	LRFD	1.2D+1.6S+L
Moment Y (ft-lbs)	1,549	4,382	Passed (35% used)	LRFD	1.2D+1.6S+L
Crushing (lbs)	9,215	195,840	Passed (5% used)	LRFD	1.2D+1.6S+L
Minimum Thickness (in)	8	10	Passed (80% used)	code	ACI 318-14 Ch. 14

Footing Specification

as entered on the footing, and the mat the check selected

Geometry	
Shape	Square
Column type	Concrete
Footing width	2' 6"
Footing length	2' 6"
Footing depth	10"
Column width	8"
Column length	8"
Pedestal height	4"
Pedestal width	4"
Pedestal length	4"

Footing Properties	
Steel yield strength	60,000 psi
Concrete strength	3,000 psi
Soil bearing pressure	1,500 psf
Concrete density	145 pcf
Top reinf. cover	3"
Bottom reinf. cover	3"
Side reinf. cover	3"
Aggregate diameter	3/4"

Soil Properties	
Soil depth above footing	0
Soil density	140 pcf
Soil cohesion	0 psf
Friction angle	30°
Water level	0

Reinforcement	
Reinforcing	none -- plain concrete
Plain concrete (no reinforcing)	Yes
Override rebar	No
Include water level	No
Allow bearing pressure increase	No

- Soil bearing is checked at service level (ASD) and includes the footing's own weight; shear, moment and crushing at strength level (LRFD), ACI 318-14, loads combined to ASCE 7-16.
- Reinforcement is selected for the moment and for minimum steel (ACI 318-14: 0.0018 Ag for Grade 60), at no more than 3h or 18 in.

Applied Loads	Location	Trib. Width	Dead (0.90)	Snow (1.15)	Comments
1 - Point (lb)	--	N/A	614.3	5,299	Linked from: Header #37, Support 2

Hangers for every member end set flush in a hanger, or hung from a foundation wall's mud sill; a cap and a base for every post -- from Simpson Strong-Tie's Wood Construction Connectors catalog C-C-2026. Each is checked at every ASD load combination against the catalog's allowable load for that load duration (hangers: floor 100, snow 115, roof 125; caps and bases: as printed, no increase; uplift 160, reduced where gravity governs), for the lower specific gravity of the members. Use = the governing demand over that allowable. Fabricated: nothing in the catalog carries it (or chosen so); it is designed here as a steel plate hanger -- face plate, seat, side plates, fasteners and welds to the 2018 NDS and AISC 360-16, for its reactions and the ASCE 7 1.4.4 tie -- and listed under Fasteners, Use being the governing check; where it can't be, design it to the load shown. Each fabricated hanger's design sheet follows this schedule; one locked as drawn is checked as built. A hanger off a member that is not in the model, a crawl space header for one, is listed under the member it carries by its note key, with how many; its load is on each. A ledger's fastening to what it hangs on is designed to the 2018 NDS -- the 12.3 yield model, across any sheathing gap per AWC TR12, and the 11.3 factors -- its spacing for the load per foot its joists put on it; listed under Ledgers.

59 hung ends: 58 Simpson, 1 fabricated.

Member	End	Hanger	Hangs on	Design load (ASD)	Use	Fasteners
Beam #16	3	HWP5.62 top flange, order H 21, p. 205 (first that works)	Beam #10, 5 1/2 x 21 glulam	176 lb D; uplift 991 lb D+S	88%	(9) 0.162 x 3 1/2 header + (12) 0.148 x 1 1/2 joist
Beam #20	3	**FAB HANGER BM 20-3**	Column Bm #6-1, 6x10 post	135 lb D; uplift 668 lb D+S	47%	(4) 1/2 x 3 lag screws into the post; face plate 21 x 8-7/8 x 1/8; (2) side plates 4-3/4 x 9-1/16 x 1/8; seat plate 2-1/8 x 8-7/8 x 1/4; spacer frame 21 x 8-7/8 x 5/8; (2) 3/4 in bolts through the beam; uplift rating 1,995 lb (C_D 1.6)
Beam #23	1	HUCQ1.81/9-SDS face mount, concealed flanges, p. 158	Column Bm #6-1, 6x10 post	1,927 lb D+L	96%	(8) 1/4 x 1 3/4 SDS face + (4) 1/4 x 1 3/4 SDS joist
Beam #23	2	HUCQ1.81/9-SDS face mount, concealed flanges, p. 158	Column Bm #6-2, 6x8 post	1,643 lb D+L	82%	(8) 1/4 x 1 3/4 SDS face + (4) 1/4 x 1 3/4 SDS joist
Deck Joists #1	2	PF28B top flange, p. 147 (first that works)	LEDGER Deck Joists #1-2, 2x8 DF-L No. 2 ledger	655 lb D+S	49%	(2) 0.148 x 1 1/2 top + (4) 0.148 x 1 1/2 face + (6) 0.148 x 1 1/2 joist
Joist #1	1	ITS3.56/14 top flange, p. 201	Beam #18, 8 3/4 x 21 glulam	19 lb D+L	1%	(6) 0.148 x 3 header
Joist #1	2	ITS3.56/14 top flange, p. 201	Beam #19, 8 3/4 x 21 glulam	19 lb D+L	1%	(6) 0.148 x 3 header
Joist #2	2	IUS1.81/14 face mount, p. 158 (first that works)	Beam #23, 1 3/4 x 14 LVL	681 lb D+L	62%	(12) 0.148 x 1 1/2 face -- the 1 3/4" member: 0.148 x 1 1/2 nails into it in place of the 0.148 x 3, 0.77 of the table (p. 26); back to back with Joist #13 1 on the far face: the header fasteners from both (1 1/2" + 1 1/2") are longer than the 1 3/4" member is thick -- stagger them so they don't meet
Joist #3	2	IUS1.81/14 face mount, p. 158 (first that works)	Beam #23, 1 3/4 x 14 LVL	681 lb D+L	62%	(12) 0.148 x 1 1/2 face -- the 1 3/4" member: 0.148 x 1 1/2 nails into it in place of the 0.148 x 3, 0.77 of the table (p. 26)
Joist #13	1	IUS1.81/14 face mount, p. 158 (first that works)	Beam #23, 1 3/4 x 14 LVL	267 lb D+L	24%	(12) 0.148 x 1 1/2 face -- the 1 3/4" member: 0.148 x 1 1/2 nails into it in place of the 0.148 x 3, 0.77 of the table (p. 26); back to back with Joist #2 2 on the far face: the header fasteners from both (1 1/2" + 1 1/2") are longer than the 1 3/4" member is thick -- stagger them so they don't meet
Joist #13	2	IUS1.81/14 face mount, p. 158 (first that works)	Beam #22, 1 3/4 x 14 LVL	267 lb D+L	24%	(12) 0.148 x 1 1/2 face -- the 1 3/4" member: 0.148 x 1 1/2 nails into it in place of the 0.148 x 3, 0.77 of the table (p. 26)
Joist #14	1	ITS3.56/14 top flange, p. 201	Beam #17, 8 3/4 x 21 glulam	618 lb D+L	42%	(6) 0.148 x 3 header
Joist #14	2	ITS3.56/14 top flange, p. 201	Beam #18, 8 3/4 x 21 glulam	618 lb D+L	42%	(6) 0.148 x 3 header
Joist #15	1	ITS3.56/14 top flange, p. 201	Beam #19, 8 3/4 x 21 glulam	70 lb D+L	5%	(6) 0.148 x 3 header
Joist #15	X2	IUS3.56/14 face mount, p. 161 (first that works)	Crawl space header at support 2, 3 1/2 x 15 1/4 sawn	70 lb D+L	5%	(12) 0.148 x 3 face
Joist #16	1	IUS3.56/14 face mount, p. 161 (first that works)	Beam #8, 4-ply 1 3/4 x 18 LVL	70 lb D+L	5%	(12) 0.148 x 3 face
Joist #16	2	ITS3.56/14 top flange, p. 201	Beam #17, 8 3/4 x 21 glulam	70 lb D+L	5%	(6) 0.148 x 3 header
Joists #5	6	ITS1.81/9.5 top flange on the sill, p. 197 (first that works)	2x mud sill (SPF/HF)	423 lb D+L	37%	(6) 0.148 x 3 header

Hangers (continued)

Member	End	Hanger	Hangs on	Design load (ASD)	Use	Fasteners
Joists #5	X2	(2) IUS1.81/9.5 face mount, p. 158 (first that works), 1 each side	Crawl space header at support 2, 3 1/2 x 15 1/4 sawn	532 lb D+L	56%	(8) 0.148 x 3 face -- back to back with its twin on the far face: the header fasteners from both (3" + 3") are longer than the 3 1/2" member is thick -- stagger them so they don't meet
Joists #5	X3	(2) IUS1.81/9.5 face mount, p. 158 (first that works), 1 each side	Crawl space header at support 3, 3 1/2 x 15 1/4 sawn	406 lb D+L	43%	(8) 0.148 x 3 face -- back to back with its twin on the far face: the header fasteners from both (3" + 3") are longer than the 3 1/2" member is thick -- stagger them so they don't meet
Joists #5	X4	(2) IUS1.81/9.5 face mount, p. 158 (first that works), 1 each side	Crawl space header at support 4, 3 1/2 x 15 1/4 sawn	406 lb D+L	43%	(8) 0.148 x 3 face -- back to back with its twin on the far face: the header fasteners from both (3" + 3") are longer than the 3 1/2" member is thick -- stagger them so they don't meet
Joists #5	X5	(2) IUS1.81/9.5 face mount, p. 158 (first that works), 1 each side	Crawl space header at support 5, 3 1/2 x 15 1/4 sawn	532 lb D+L	56%	(8) 0.148 x 3 face -- back to back with its twin on the far face: the header fasteners from both (3" + 3") are longer than the 3 1/2" member is thick -- stagger them so they don't meet
Joists #6	4	ITS1.81/9.5 top flange on the sill, p. 197 (first that works)	2x mud sill (SPF/HF)	314 lb D+L	27%	(6) 0.148 x 3 header
Joists #6	X2	(2) IUS1.81/9.5 face mount, p. 158 (first that works), 1 each side	Crawl space header at support 2, 3 1/2 x 15 1/4 sawn	399 lb D+L	42%	(8) 0.148 x 3 face -- back to back with its twin on the far face: the header fasteners from both (3" + 3") are longer than the 3 1/2" member is thick -- stagger them so they don't meet
Joists #6	X3	(2) IUS1.81/9.5 face mount, p. 158 (first that works), 1 each side	Crawl space header at support 3, 3 1/2 x 15 1/4 sawn	399 lb D+L	42%	(8) 0.148 x 3 face -- back to back with its twin on the far face: the header fasteners from both (3" + 3") are longer than the 3 1/2" member is thick -- stagger them so they don't meet
Joists #7	5	ITS1.81/9.5 top flange on the sill, p. 197 (first that works)	2x mud sill (SPF/HF)	293 lb D+L	25%	(6) 0.148 x 3 header
Joists #7	X2	(2) IUS1.81/9.5 face mount, p. 158 (first that works), 1 each side	Crawl space header at support 2, 3 1/2 x 15 1/4 sawn	425 lb D+L	45%	(8) 0.148 x 3 face -- back to back with its twin on the far face: the header fasteners from both (3" + 3") are longer than the 3 1/2" member is thick -- stagger them so they don't meet
Joists #7	X3	(2) IUS1.81/9.5 face mount, p. 158 (first that works), 1 each side	Crawl space header at support 3, 3 1/2 x 15 1/4 sawn	375 lb D+L	40%	(8) 0.148 x 3 face -- back to back with its twin on the far face: the header fasteners from both (3" + 3") are longer than the 3 1/2" member is thick -- stagger them so they don't meet
Joists #7	X4	(2) IUS1.81/9.5 face mount, p. 158 (first that works), 1 each side	Crawl space header at support 4, 3 1/2 x 15 1/4 sawn	399 lb D+L	42%	(8) 0.148 x 3 face -- back to back with its twin on the far face: the header fasteners from both (3" + 3") are longer than the 3 1/2" member is thick -- stagger them so they don't meet
Joists #8	6	ITS1.81/9.5 top flange on the sill, p. 197 (first that works)	2x mud sill (SPF/HF)	385 lb D+L	33%	(6) 0.148 x 3 header
Joists #8	X2	(2) IUS1.81/9.5 face mount, p. 158 (first that works), 1 each side	Crawl space header at support 2, 3 1/2 x 15 1/4 sawn	425 lb D+L	45%	(8) 0.148 x 3 face -- back to back with its twin on the far face: the header fasteners from both (3" + 3") are longer than the 3 1/2" member is thick -- stagger them so they don't meet

Hangers (continued)

Member	End	Hanger	Hangs on	Design load (ASD)	Use	Fasteners
Joists #8	X3	(2) IUS1.81/9.5 face mount, p. 158 (first that works), 1 each side	Crawl space header at support 3, 3 1/2 x 15 1/4 sawn	371 lb D+L	39%	(8) 0.148 x 3 face -- back to back with its twin on the far face: the header fasteners from both (3" + 3") are longer than the 3 1/2" member is thick -- stagger them so they don't meet
Joists #8	X4	(2) IUS1.81/9.5 face mount, p. 158 (first that works), 1 each side	Crawl space header at support 4, 3 1/2 x 15 1/4 sawn	303 lb D+L	32%	(8) 0.148 x 3 face -- back to back with its twin on the far face: the header fasteners from both (3" + 3") are longer than the 3 1/2" member is thick -- stagger them so they don't meet
Joists #8	X5	(2) IUS1.81/9.5 face mount, p. 158 (first that works), 1 each side	Crawl space header at support 5, 3 1/2 x 15 1/4 sawn	478 lb D+L	50%	(8) 0.148 x 3 face -- back to back with its twin on the far face: the header fasteners from both (3" + 3") are longer than the 3 1/2" member is thick -- stagger them so they don't meet
Joists #9	8	ITS1.81/9.5 top flange on the sill, p. 197 (first that works)	2x mud sill (SPF/HF)	181 lb D+L	16%	(6) 0.148 x 3 header
Joists #10	9	ITS1.81/9.5 top flange on the sill, p. 197 (first that works)	2x mud sill (SPF/HF)	290 lb D+L	25%	(6) 0.148 x 3 header
Joists #10	X1	(2) IUS1.81/9.5 face mount, p. 158 (first that works), 1 each side	Crawl space header at support 2, 3 1/2 x 15 1/4 sawn	197 lb D+L	21%	(8) 0.148 x 3 face -- back to back with its twin on the far face: the header fasteners from both (3" + 3") are longer than the 3 1/2" member is thick -- stagger them so they don't meet
Joists #10	X2	(2) IUS1.81/9.5 face mount, p. 158 (first that works), 1 each side	Crawl space header at support 3, 3 1/2 x 15 1/4 sawn	213 lb D+L	22%	(8) 0.148 x 3 face -- back to back with its twin on the far face: the header fasteners from both (3" + 3") are longer than the 3 1/2" member is thick -- stagger them so they don't meet
Joists #10	X3	(2) IUS1.81/9.5 face mount, p. 158 (first that works), 1 each side	Crawl space header at support 4, 3 1/2 x 15 1/4 sawn	399 lb D+L	42%	(8) 0.148 x 3 face -- back to back with its twin on the far face: the header fasteners from both (3" + 3") are longer than the 3 1/2" member is thick -- stagger them so they don't meet
Joists #10	X4	(2) IUS1.81/9.5 face mount, p. 158 (first that works), 1 each side	Crawl space header at support 5, 3 1/2 x 15 1/4 sawn	409 lb D+L	43%	(8) 0.148 x 3 face -- back to back with its twin on the far face: the header fasteners from both (3" + 3") are longer than the 3 1/2" member is thick -- stagger them so they don't meet
Joists #10	X5	(2) IUS1.81/9.5 face mount, p. 158 (first that works), 1 each side	Crawl space header at support 6, 3 1/2 x 15 1/4 sawn	367 lb D+L	39%	(8) 0.148 x 3 face -- back to back with its twin on the far face: the header fasteners from both (3" + 3") are longer than the 3 1/2" member is thick -- stagger them so they don't meet
Joists #10	X6	(2) IUS1.81/9.5 face mount, p. 158 (first that works), 1 each side	Crawl space header at support 7, 3 1/2 x 15 1/4 sawn	317 lb D+L	33%	(8) 0.148 x 3 face -- back to back with its twin on the far face: the header fasteners from both (3" + 3") are longer than the 3 1/2" member is thick -- stagger them so they don't meet
Joists #10	X7	(2) IUS1.81/9.5 face mount, p. 158 (first that works), 1 each side	Crawl space header at support 8, 3 1/2 x 15 1/4 sawn	318 lb D+L	33%	(8) 0.148 x 3 face -- back to back with its twin on the far face: the header fasteners from both (3" + 3") are longer than the 3 1/2" member is thick -- stagger them so they don't meet
Joists #10	X8	(2) IUS1.81/9.5 face mount, p. 158 (first that works), 1 each side	Crawl space header at support 9, 3 1/2 x 15 1/4 sawn	372 lb D+L	39%	(8) 0.148 x 3 face -- back to back with its twin on the far face: the header fasteners from both (3" + 3") are longer than the 3 1/2" member is thick -- stagger them so they don't meet

Hangers (continued)

Member	End	Hanger	Hangs on	Design load (ASD)	Use	Fasteners
Joists #11	1	ITS1.81/9.5 top flange on the sill, p. 197 (first that works)	2x mud sill (SPF/HF)	385 lb D+L	33%	(6) 0.148 x 3 header
Joists #11	5	ITS1.81/9.5 top flange on the sill, p. 197 (first that works)	2x mud sill (SPF/HF)	311 lb D+L	27%	(6) 0.148 x 3 header
Joists #11	X2	(2) IUS1.81/9.5 face mount, p. 158 (first that works), 1 each side	Crawl space header at support 2, 3 1/2 x 15 1/4 sawn	478 lb D+L	50%	(8) 0.148 x 3 face -- back to back with its twin on the far face: the header fasteners from both (3" + 3") are longer than the 3 1/2" member is thick -- stagger them so they don't meet
Joists #11	X3	(2) IUS1.81/9.5 face mount, p. 158 (first that works), 1 each side	Crawl space header at support 3, 3 1/2 x 15 1/4 sawn	299 lb D+L	31%	(8) 0.148 x 3 face -- back to back with its twin on the far face: the header fasteners from both (3" + 3") are longer than the 3 1/2" member is thick -- stagger them so they don't meet
Joists #11	X4	(2) IUS1.81/9.5 face mount, p. 158 (first that works), 1 each side	Crawl space header at support 4, 3 1/2 x 15 1/4 sawn	399 lb D+L	42%	(8) 0.148 x 3 face -- back to back with its twin on the far face: the header fasteners from both (3" + 3") are longer than the 3 1/2" member is thick -- stagger them so they don't meet
Joists #12	1	ITS1.81/9.5 top flange on the sill, p. 197 (first that works)	2x mud sill (SPF/HF)	305 lb D+L	27%	(6) 0.148 x 3 header
Joists #12	3	ITS1.81/9.5 top flange on the sill, p. 197 (first that works)	2x mud sill (SPF/HF)	272 lb D+L	24%	(6) 0.148 x 3 header
Joists #17	1	ITS1.81/9.5 top flange on the sill, p. 197 (first that works)	2x mud sill (SPF/HF)	27 lb D+L	2%	(6) 0.148 x 3 header
Joists #17	2	MIU1.81/9 face mount, p. 158 (first that works)	LEDGER Joists #17-2, 2x10 DF-L No. 2 ledger	27 lb D+L	2%	(16) 0.148 x 1 1/2 face + (2) 0.148 x 1 1/2 joist -- the 1 1/2" member: 0.148 x 1 1/2 nails into it in place of the 0.162 x 3 1/2, 0.64 of the table (p. 26)
Outlookers	1	LU26 face mount, p. 114	2x6 DF-L No. 2 truss chord	0 lb	0%	(6) 0.148 x 1 1/2 header + (4) 0.148 x 1 1/2 joist -- the 1 1/2" member: 0.148 x 1 1/2 nails into it in place of the 0.162 x 3 1/2, 0.64 of the table (p. 26)
Rafters #1	3	LRU28Z rafter hanger, sloped 4.8° down in the field, p. 126 (first that works)	LEDGER Rafters #1-3, 2x12 DF-L No. 2 ledger	634 lb D+S	75%	(6) 0.148 x 1 1/2 face + (5) 0.148 x 3 joist -- the 1 1/2" member: 0.148 x 1 1/2 nails into it in place of the 0.148 x 3, 0.81 of the table (p. 126)
Rafters #2	4	LRU212Z rafter hanger, sloped 4.8° down in the field, p. 126 (first that works)	LEDGER Rafters #2-4, 2x14 HF No. 2 ledger	408 lb D+S	41%	(6) 0.148 x 1 1/2 face + (7) 0.148 x 3 joist -- the 1 1/2" member: 0.148 x 1 1/2 nails into it in place of the 0.148 x 3, 0.81 of the table (p. 126)
Rafters #3	1	LRU28Z rafter hanger, sloped 39.8° down in the field, p. 126 (first that works)	LEDGER Rafters #3-1, 1 3/4 x 14 1.55E LSL ledger	742 lb D+S	87%	(6) 0.148 x 1 1/2 face + (5) 0.148 x 3 joist -- the 1 3/4" member: 0.148 x 1 1/2 nails into it in place of the 0.148 x 3, 0.81 of the table (p. 126)
Rafters #4	3	LRU28Z rafter hanger, sloped 39.8° down in the field, p. 126 (first that works)	LEDGER Rafters #4-3, 1 3/4 x 14 1.55E LSL ledger	201 lb D+S	24%	(6) 0.148 x 1 1/2 face + (5) 0.148 x 3 joist -- the 1 3/4" member: 0.148 x 1 1/2 nails into it in place of the 0.148 x 3, 0.81 of the table (p. 126)
Rafters #5	1	LRU28Z rafter hanger, sloped 39.8° down in the field, p. 126 (first that works)	LEDGER Rafters #5-1, 1 3/4 x 14 1.55E LSL ledger	534 lb D+S	63%	(6) 0.148 x 1 1/2 face + (5) 0.148 x 3 joist -- the 1 3/4" member: 0.148 x 1 1/2 nails into it in place of the 0.148 x 3, 0.81 of the table (p. 126)

Ledgers -- each one's fastening to what it hangs on

Member	End	Ledger	Fastened to	Fastening	Use
Deck Joists #1	2	LEDGER Deck Joists #1-2: 2x8 DF-L No. 2 ledger	a 2x DF-L rim board	SDS25312 screws, 2 rows staggered @ 6 in. o.c.	94%
Joists #17	2	LEDGER Joists #17-2: 2x10 DF-L No. 2 ledger	2x6 DF-L studs at 16 in.	(2) 1/2 x 4-1/2 lags at each stud (16 in. o.c.)	5%
Rafters #1	3	LEDGER Rafters #1-3: 2x12 DF-L No. 2 ledger	2x6 DF-L studs at 16 in.	(3) 1/2 x 4-1/2 lags at each stud (16 in. o.c.)	75%

Hangers (continued)

Member	End	Ledger	Fastened to	Fastening	Use
Rafters #2	4	LEDGER Rafters #2-4: 2x14 HF No. 2 ledger	2x6 DF-L studs at 16 in.	(2) 1/2 x 4-1/2 lags at each stud (16 in. o.c.)	81%
Rafters #3	1	LEDGER Rafters #3-1: 1 3/4 x 14 1.55E LSL ledger	2x6 DF-L studs at 16 in.	(3) 1/2 x 5 lags at each stud (16 in. o.c.)	75%
Rafters #4	3	LEDGER Rafters #4-3: 1 3/4 x 14 1.55E LSL ledger	2x6 DF-L studs at 16 in.	(2) 1/2 x 5 lags at each stud (16 in. o.c.)	30%
Rafters #5	1	LEDGER Rafters #5-1: 1 3/4 x 14 1.55E LSL ledger	2x6 DF-L studs at 16 in.	(2) 1/2 x 5 lags at each stud (16 in. o.c.)	80%

14 posts, 5 of them assumed 6x6. A post is a spot footing with beams on it, or a column; its size is the job's, else the pad's column, else an assumed 6x6 (the pa

Post	Size	On it	Cap	Base	Design load (ASD)
Column Bm #6-1	6x10 post	Beam #6 1	BC460, p. 93	ABU66Z, p. 76 66%	8,542 lb D+S
Column Bm #6-2	6x8 post	Beam #6 2	BC460, p. 93	ABU66Z, p. 76 71%	9,139 lb D+S
SpotFtg Bm #1-2	10x10 post	Beam #1 2	(2) HL55, p. 315	**Fabricated**	23,032 lb D+S
SpotFtg Bm #1-3	10x10 post	Beam #1 3	(2) HL55, p. 315	**Fabricated**	23,169 lb D+S
SpotFtg Bm #5-1	10x10 post	Beam #5 1	(1) HL55, p. 315	**Fabricated**	793 lb D+S
SpotFtg Bm #5-2	10x10 post	Beam #5 2	(2) HL55, p. 315	**Fabricated**	9,142 lb D+S
SpotFtg Bm #5-3	10x10 post	Beam #5 3	(2) HL55, p. 315	**Fabricated**	9,142 lb D+S
SpotFtg Bm #5-4	10x10 post	Beam #5 4	(1) HL55, p. 315	**Fabricated**	793 lb D+S
SpotFtg Bm #9-2	10x10 post	Beam #9 2	(2) HL55, p. 315	**Fabricated**	22,286 lb D+S
SpotFtg Bm #24-2	6x6 post (assumed)	Beam #24 2	ECCQ66SDS2.5, p. 99 19%	ABU66Z, p. 76 28%	3,579 lb D+S
SpotFtg Bm #25-1	6x6 post (assumed)	Beam #25 1	ECCQ66SDS2.5, p. 99 19%	ABU66Z, p. 76 28%	3,579 lb D+S
SpotFtg Bm #25-2	6x6 post (assumed)	Beam #25 2	ECCQ66SDS2.5, p. 99 19%	ABU66Z, p. 76 28%	3,579 lb D+S
SpotFtg Gdr #1-1	6x6 post (assumed)	Girder #1 1	by the truss layout	ABU66Z, p. 76 61%	7,932 lb D+S
SpotFtg Gdr #1-2	6x6 post (assumed)	Girder #1 2	by the truss layout	ABU66Z, p. 76 61%	7,932 lb D+S

Simpson hardware

Every Simpson Strong-Tie part the job uses, by model: how many, where each goes, its fasteners and its worst use. The catalog page each is on is printed at the back of this package; a model named anywhere in the package links to its page.

Hangers -- 12 models, 83 pieces

Model	Qty	Where	Fasteners	Use	Catalog
HUCQ1.81/9-SDS	2	Beam #23 1 on Column Bm #6-1; Beam #23 2 on Column Bm #6-2	(8) 1/4 x 1 3/4 SDS face + (4) 1/4 x 1 3/4 SDS joist	96%	p. 158
HWP5.62	1	Beam #16 3 on Beam #10	(9) 0.162 x 3 1/2 header + (12) 0.148 x 1 1/2 joist	88%	p. 205
ITS1.81/9.5	11	Joists #5 6 on mud sill; Joists #6 4 on mud sill; Joists #7 5 on mud sill; Joists #8 6 on mud sill; Joists #9 8 on mud sill; Joists #10 9 on mud sill; Joists #11 1 on mud sill; Joists #11 5 on mud sill; Joists #12 1 on mud sill; Joists #12 3 on mud sill; Joists #17 1 on mud sill	(6) 0.148 x 3 header	37%	p. 197
ITS3.56/14	6	Joist #1 1 on Beam #18; Joist #1 2 on Beam #19; Joist #14 1 on Beam #17; Joist #14 2 on Beam #18; Joist #15 1 on Beam #19; Joist #16 2 on Beam #17	(6) 0.148 x 3 header	42%	p. 201
IUS1.81/9.5	48	Joists #5 X2 on Crawl space header at support 2; Joists #5 X3 on Crawl space header at support 3; Joists #5 X4 on Crawl space header at support 4; Joists #5 X5 on Crawl space header at support 5; Joists #6 X2 on Crawl space header at support 2; Joists #6 X3 on Crawl space header at support 3; Joists #7 X2 on Crawl space header at support 2; Joists #7 X3 on Crawl space header at support 3; Joists #7 X4 on Crawl space header at support 4; Joists #8 X2 on Crawl space header at support 2; Joists #8 X3 on Crawl space header at support 3; Joists #8 X4 on Crawl space header at support 4; Joists #8 X5 on Crawl space header at support 5; Joists #10 X1 on Crawl space header at support 2; Joists #10 X2 on Crawl space header at support 3; Joists #10 X3 on Crawl space header at support 4; Joists #10 X4 on Crawl space header at support 5; Joists #10 X5 on Crawl space header at support 6; Joists #10 X6 on Crawl space header at support 7; Joists #10 X7 on Crawl space header at support 8; Joists #10 X8 on Crawl space header at support 9; Joists #11 X2 on Crawl space header at support 2; Joists #11 X3 on Crawl space header at support 3; Joists #11 X4 on Crawl space header at support 4	(8) 0.148 x 3 face	56%	p. 158
IUS1.81/14	4	Joist #2 2 on Beam #23; Joist #3 2 on Beam #23; Joist #13 1 on Beam #23; Joist #13 2 on Beam #22	(12) 0.148 x 1 1/2 face	62%	p. 158
IUS3.56/14	2	Joist #15 X2 on Crawl space header at support 2; Joist #16 1 on Beam #8	(12) 0.148 x 3 face	5%	p. 161

Simpson hardware (continued)

Model	Qty	Where	Fasteners	Use	Catalog
LRU28Z	4	Rafters #1 3 on ledger; Rafters #3 1 on ledger; Rafters #4 3 on ledger; Rafters #5 1 on ledger	(6) 0.148 x 1 1/2 face + (5) 0.148 x 3 joist	87%	p. 126
LRU212Z	1	Rafters #2 4 on ledger	(6) 0.148 x 1 1/2 face + (7) 0.148 x 3 joist	41%	p. 126
LU26	1	Outlookers 1 on truss chord	(6) 0.148 x 1 1/2 header + (4) 0.148 x 1 1/2 joist	0%	p. 114
MIU1.81/9	1	Joists #17 2 on ledger	(16) 0.148 x 1 1/2 face + (2) 0.148 x 1 1/2 joist	2%	p. 158
PF28B	1	Deck Joists #1 2 on ledger	(2) 0.148 x 1 1/2 top + (4) 0.148 x 1 1/2 face + (6) 0.148 x 1 1/2 joist	49%	p. 147
Fabricated (design to the load in the schedule)	1	Beam #20 3 on Column Bm #6-1		--	--

Post caps -- 3 models, 17 pieces

Model	Qty	Where	Fasteners	Use	Catalog
BC460	2	Column Bm #6-1 (Beam #6 1); Column Bm #6-2 (Beam #6 2)	(6) 0.162 x 3 1/2 post flange + (4) 0.162 x 3 1/2 base bottom	--	p. 93
ECCQ66SDS2.5	3	SpotFtg Bm #24-2 (Beam #24 2); SpotFtg Bm #25-1 (Beam #25 1); SpotFtg Bm #25-2 (Beam #25 2)	16 beam / ccq + 14 beam / eccq + 14 post	19%	p. 99
HL55	12	SpotFtg Bm #1-2 (Beam #1 2); SpotFtg Bm #1-3 (Beam #1 3); SpotFtg Bm #5-1 (Beam #5 1); SpotFtg Bm #5-2 (Beam #5 2); SpotFtg Bm #5-3 (Beam #5 3); SpotFtg Bm #5-4 (Beam #5 4); SpotFtg Bm #9-2 (Beam #9 2)	(8) 1/2 in bolts each angles	--	p. 315

Post bases -- 1 model, 14 pieces

Model	Qty	Where	Fasteners	Use	Catalog
ABU66Z	7	Column Bm #6-1 (Beam #6 1); Column Bm #6-2 (Beam #6 2); SpotFtg Bm #24-2 (Beam #24 2); SpotFtg Bm #25-1 (Beam #25 1); SpotFtg Bm #25-2 (Beam #25 2); SpotFtg Gdr #1-1 (Girder #1 1); SpotFtg Gdr #1-2 (Girder #1 2)	5/8 anchor dia. + (12) 0.162 x 3 1/2 nails	71%	p. 76
Fabricated (design to the load in the schedule)	7	SpotFtg Bm #1-2 (Beam #1 2); SpotFtg Bm #1-3 (Beam #1 3); SpotFtg Bm #5-1 (Beam #5 1); SpotFtg Bm #5-2 (Beam #5 2); SpotFtg Bm #5-3 (Beam #5 3); SpotFtg Bm #5-4 (Beam #5 4); SpotFtg Bm #9-2 (Beam #9 2)		--	--

LEDGER Deck Joists #1-2

Deck Joists #1 hangs on it at support 2, in a PF28B top flange, 51%.
The 2x8 DF-L No. 2 ledger is fastened to a 2x DF-L rim board, 1/2" sheathing between, wet service.
Its joists at 16" o.c. load it along its length: each one's reaction x 12 / 16 per foot of ledger.

Fastening: SDS25312 screws, 2 rows staggered @ 6 in. o.c. -- 6% to spare (94% used, D+S)

SECTION 1 in. = 14 pt, true scale

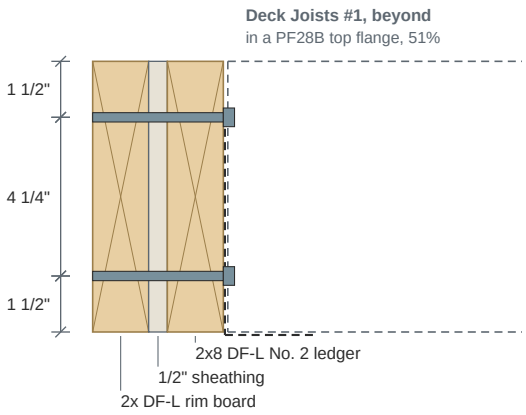

FACE OF THE LEDGER 1 in. = 8.2 pt, true scale

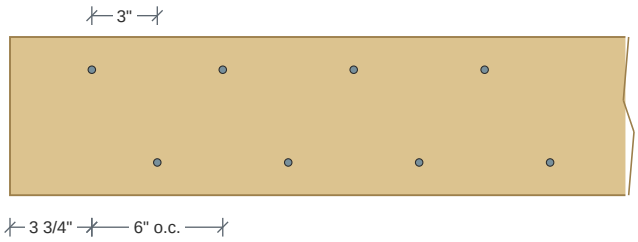

The load on the ledger, each ASD combination

Combination	Load, lb/ft of ledger	C_D
D	42	0.9
D+L	42	1
D+S	492	1.15
D+Lr	42	1.25
D+0.75L+0.75S	379	1.15
D+0.75L+0.75Lr	42	1.25

Each fastener -- the NDS 12.3 yield model, across the sheathing gap per AWC TR12

SDS25312 (1/4 x 3-1/2 SDS): Z = 162 lb, yield mode IIIm (one hinge in the fastener, main member crushing); Z' = Z x C_D x C_M x C_t = 130 lb at D+S (C_M 0.7). The ledger (side member): G = 0.5, bearing length 1 1/2", Fes = 4,637 psi. What it hangs on (main member): G = 0.5, bearing length 1 5/16", Fem = 4,637 psi, penetration 1 1/2". Gap g = 1/2".

Checks

Check	Reference	Demand	Capacity	Used	Combination
Each fastener, lateral (SDS25312 (1/4 x 3-1/2 SDS))	ESR-2236 4.1.6; NDS 12.3, 11.3	123 lb	130 lb	94%	D+S
The ledger's shear at its fasteners	NDS 3.4.3.3	123 lb	326 lb	38%	D+S (de = 1-5/8 in.)
The ledger's bending between fasteners	NDS 3.3	492 in-lb	16,321 in-lb	3%	D+S

Requirements

Requirement	Provided	Required	Reference	
SDS into the rim board	1 1/2"	1 1/2"	ESR-2236 4.1.6	OK
The rim board at least the screw less the ledger	1 1/2"	1 1/2"	ESR-2236 3.3.2	OK
Spacing in a row	6"	1 3/4"	ESR-2236 Table 4B	OK
Spacing between the staggered rows	4 1/4"	3/4"	ESR-2236 Table 4B	OK
A deck ledger: at least a 2x8, as deep as the joists	7 1/4"	7 1/4"	IRC R507.9.1.1	OK

IRC Table R507.9.1.3(1) doesn't cover it: the table is for 1/2 in. lags and bolts; its loads (dead 12 psf, snow 150 psf) are past the table's 40 psf live, 10 psf dead, 40 psf snow.

Note: SDS by the NDS's yield equations on its root diameter (0.188 in.) and Fyb 172,000 psi (ESR-2236 4.1.6) -- across a 1/2 in. gap, so not Simpson's tested value.

Not checked here: The deck's lateral load connection (IRC R507.9.2: hold-downs at the ledger).

LEDGER Joists #17-2

Joists #17 hangs on it at support 2, in an MIU1.81/9 face mount, 98%.
The 2x10 DF-L No. 2 ledger is fastened to 2x6 DF-L studs at 16 in., 1/2" sheathing between, dry service.
Its joists at 24" o.c. load it along its length: each one's reaction x 12 / 24 per foot of ledger.

Fastening: (2) 1/2 x 4-1/2 lags at each stud (16 in. o.c.) -- 95% to spare (5% used, D+L); picked automatically

SECTION 1 in. = 9.1 pt, true scale

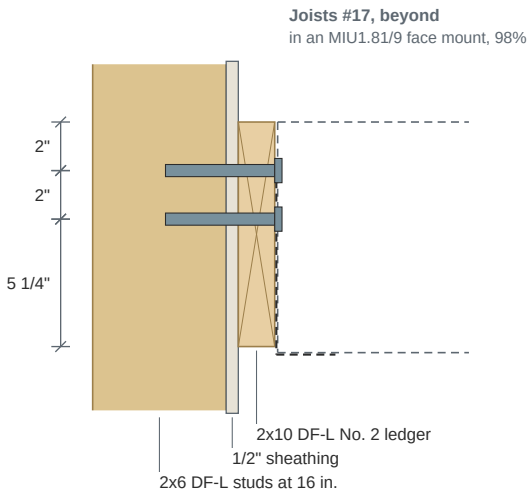

FACE OF THE LEDGER 1 in. = 5.6 pt, true scale

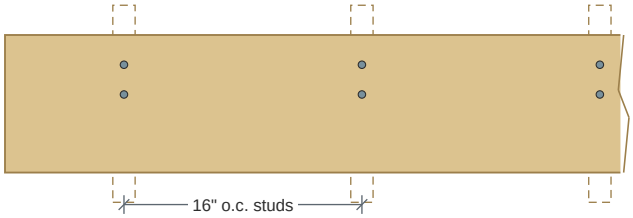

The load on the ledger, each ASD combination

Combination	Load, lb/ft of ledger	C_D
D	3	0.9
D+L	13	1
D+S	3	1.15
D+Lr	3	1.25
D+0.75L+0.75S	11	1.15
D+0.75L+0.75Lr	11	1.25

Each fastener -- the NDS 12.3 yield model, across the sheathing gap per AWC TR12

1/2" x 4-1/2" lag screw: Z = 168 lb, yield mode IIIs (one hinge in the fastener, side member crushing). The ledger (side member): G = 0.5, bearing length 1 1/2", Fes = 3,158 psi. What it hangs on (main member): G = 0.5, bearing length 2 3/8", Fem = 5,600 psi, penetration 2 1/2". Gap g = 1/2".

Checks

Check	Reference	Demand	Capacity	Used	Combination
Each stud's line of 2 1/2" x 4-1/2" lag screws, lateral	NDS 12.3, 11.3 (Cg 0.992)	18 lb	333 lb	5%	D+L
The ledger's shear at its fasteners	NDS 3.4.3.3	9 lb	405 lb	2%	D+L (de = 2-1/4 in.)
The ledger's bending between fasteners	NDS 3.3	106 in-lb	21,177 in-lb	1%	D+L

Requirements

Requirement	Provided	Required	Reference	
Lag screw thread in the studs, less its tip	2 3/16"	2"	NDS 12.1.4.6	OK
Edge distance in the stud (each side)	3/4"	3/4"	NDS Table 12.5.1C (parallel to grain)	OK
Spacing up the stud	2"	2"	NDS Table 12.5.1B (parallel to grain)	OK

Tried: (2) 1/2 x 4-1/2 lags at each stud (16 in. o.c.) -- ok.
Tried: (2) 3/8 x 4 lags at each stud (16 in. o.c.) -- ok.
Tried: (2) No. 14 x 3-1/2 screws at each stud (16 in. o.c.) -- ok.
Tried: (2) 16d common nails at each stud (16 in. o.c.) -- ok.
Note: Length: 4-1/2 in., the shortest that develops the full value (168 lb; the longest that fits gives 168 lb) -- a longer one only goes deeper into the studs.

LEDGER Rafters #1-3

Rafters #1 hangs on it at support 3, in an LRU28Z SLD5 rafter hanger, sloped 4.8° down in the field, 25%.
The 2x12 DF-L No. 2 ledger is fastened to 2x6 DF-L studs at 16 in., 1/2" sheathing between, dry service.
Its joists at 24" o.c. load it along its length: each one's reaction x 12 / 24 per foot of ledger.

Fastening: (3) 1/2 x 4-1/2 lags at each stud (16 in. o.c.) -- 25% to spare (75% used, D+S); picked automatically

SECTION 1 in. = 8.1 pt, true scale

Rafters #1, beyond
in an LRU28Z SLD5 rafter hanger, sloped 4.8° down in the field, 25%

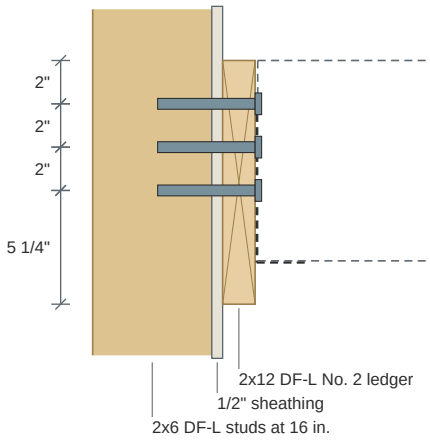

FACE OF THE LEDGER 1 in. = 5.6 pt, true scale

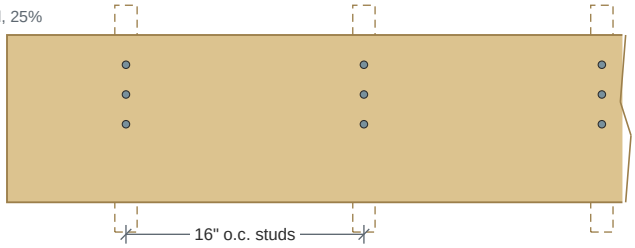

The load on the ledger, each ASD combination

Combination	Load, lb/ft of ledger	C_D
D	35	0.9
D+L	35	1
D+S	317	1.15
D+Lr	35	1.25
D+0.75L+0.75S	247	1.15
D+0.75L+0.75Lr	35	1.25

Each fastener -- the NDS 12.3 yield model, across the sheathing gap per AWC TR12

1/2" x 4-1/2" lag screw: Z = 168 lb, yield mode IIIs (one hinge in the fastener, side member crushing). The ledger (side member): G = 0.5, bearing length 1 1/2", Fes = 3,158 psi. What it hangs on (main member): G = 0.5, bearing length 2 3/8", Fem = 5,600 psi, penetration 2 1/2". Gap g = 1/2".

Checks

Check	Reference	Demand	Capacity	Used	Combination
Each stud's line of 3 1/2" x 4-1/2" lag screws, lateral	NDS 12.3, 11.3 (Cg 0.972)	423 lb	562 lb	75%	D+S
The ledger's shear at its fasteners	NDS 3.4.3.3	141 lb	466 lb	30%	D+S (de = 2-1/4 in.)
The ledger's bending between fasteners	NDS 3.3	2,537 in-lb	32,748 in-lb	8%	D+S

Requirements

Requirement	Provided	Required	Reference	
Lag screw thread in the studs, less its tip	2 3/16"	2"	NDS 12.1.4.6	OK
Edge distance in the stud (each side)	3/4"	3/4"	NDS Table 12.5.1C (parallel to grain)	OK
Spacing up the stud	2"	2"	NDS Table 12.5.1B (parallel to grain)	OK

Tried: (3) 1/2 x 4-1/2 lags at each stud (16 in. o.c.) -- ok.
Tried: (5) 3/8 x 4 lags at each stud (16 in. o.c.) -- ok.
Tried: (4) No. 14 x 3-1/2 screws at each stud (16 in. o.c.) -- ok.
Tried: (5) 16d common nails at each stud (16 in. o.c.) -- ok.
Note: Length: 4-1/2 in., the shortest that develops the full value (168 lb; the longest that fits gives 168 lb) -- a longer one only goes deeper into the studs.

LEDGER Rafters #2-4

Rafters #2 hangs on it at support 4, in an LRU212Z SLD5 rafter hanger, sloped 4.8° down in the field, 59%.
The 2x14 HF No. 2 ledger is fastened to 2x6 DF-L studs at 16 in., 1/2" sheathing between, dry service.
Its joists at 24" o.c. load it along its length: each one's reaction x 12 / 24 per foot of ledger.

Fastening: (2) 1/2 x 4-1/2 lags at each stud (16 in. o.c.) -- 19% to spare (81% used, D+S); picked automatically

SECTION 1 in. = 7.2 pt, true scale

Rafters #2, beyond
in an LRU212Z SLD5 rafter hanger, sloped 4.8° down in the field, 59%

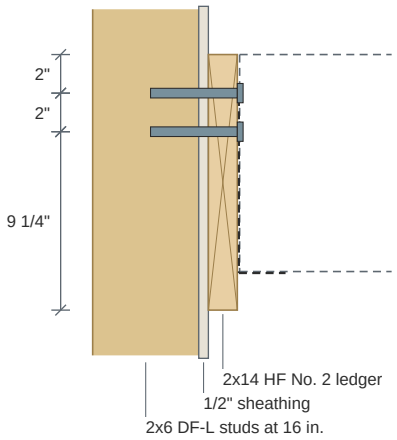

FACE OF THE LEDGER 1 in. = 5.6 pt, true scale

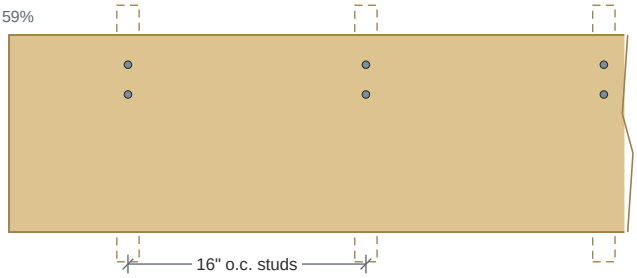

The load on the ledger, each ASD combination

Combination	Load, lb/ft of ledger	C_D
D	23	0.9
D+L	23	1
D+S	204	1.15
D+Lr	23	1.25
D+0.75L+0.75S	159	1.15
D+0.75L+0.75Lr	23	1.25

Each fastener -- the NDS 12.3 yield model, across the sheathing gap per AWC TR12

1/2" x 4-1/2" lag screw: Z = 147 lb, yield mode IIIs (one hinge in the fastener, side member crushing). The ledger (side member): G = 0.43, bearing length 1 1/2", Fes = 2,537 psi. What it hangs on (main member): G = 0.5, bearing length 2 3/8", Fem = 5,600 psi, penetration 2 1/2". Gap g = 1/2".

Checks

Check	Reference	Demand	Capacity	Used	Combination
Each stud's line of 2 1/2" x 4-1/2" lag screws, lateral	NDS 12.3, 11.3 (Cg 0.992)	272 lb	336 lb	81%	D+S
The ledger's shear at its fasteners	NDS 3.4.3.3	136 lb	388 lb	35%	D+S (de = 2-1/4 in.)
The ledger's bending between fasteners	NDS 3.3	1,632 in-lb	38,613 in-lb	4%	D+S

Requirements

Requirement	Provided	Required	Reference	
Lag screw thread in the studs, less its tip	2 3/16"	2"	NDS 12.1.4.6	OK
Edge distance in the stud (each side)	3/4"	3/4"	NDS Table 12.5.1C (parallel to grain)	OK
Spacing up the stud	2"	2"	NDS Table 12.5.1B (parallel to grain)	OK

Tried: (2) 1/2 x 4-1/2 lags at each stud (16 in. o.c.) -- ok.
Tried: (3) 3/8 x 4 lags at each stud (16 in. o.c.) -- ok.
Tried: (3) No. 14 x 3-1/2 screws at each stud (16 in. o.c.) -- ok.
Tried: (4) 16d common nails at each stud (16 in. o.c.) -- ok.
Note: Length: 4-1/2 in., the shortest that develops the full value (147 lb; the longest that fits gives 147 lb) -- a longer one only goes deeper into the studs.

LEDGER Rafters #3-1

Rafters #3 hangs on it at support 1, in an LRU28Z SLD40 rafter hanger, sloped 39.8° down in the field, 13%.
The 1 3/4 x 14 1.55E LSL ledger is fastened to 2x6 DF-L studs at 16 in., 1/2" sheathing between, dry service.
Its joists at 24" o.c. load it along its length: each one's reaction x 12 / 24 per foot of ledger.

Fastening: (3) 1/2 x 5 lags at each stud (16 in. o.c.) -- 25% to spare (75% used, D+S); picked automatically

SECTION 1 in. = 6.9 pt, true scale

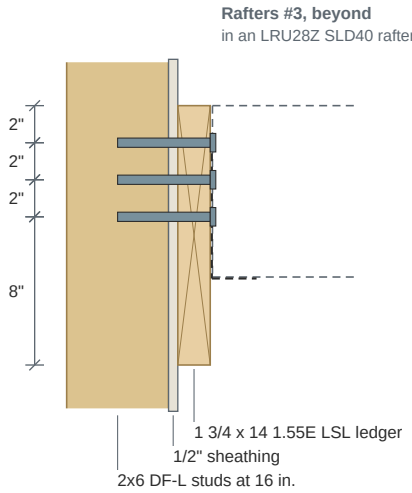

FACE OF THE LEDGER 1 in. = 5.6 pt, true scale

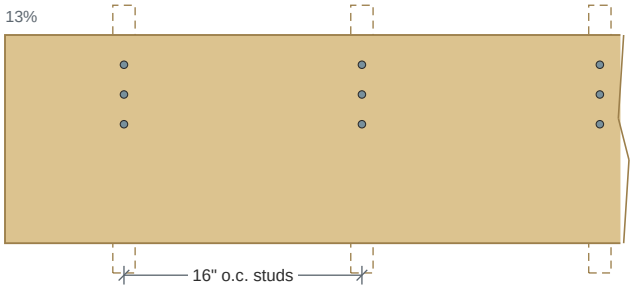

The load on the ledger, each ASD combination

Combination	Load, lb/ft of ledger	C_D
D	40	0.9
D+L	40	1
D+S	371	1.15
D+Lr	40	1.25
D+0.75L+0.75S	288	1.15
D+0.75L+0.75Lr	40	1.25

Each fastener -- the NDS 12.3 yield model, across the sheathing gap per AWC TR12

1/2" x 5" lag screw: Z = 196 lb, yield mode IV (two hinges in the fastener). The ledger (side member): G = 0.55, bearing length 1 3/4", Fes = 3,626 psi. What it hangs on (main member): G = 0.5, bearing length 2 5/8", Fem = 5,600 psi, penetration 2 3/4". Gap g = 1/2".

Checks

Check	Reference	Demand	Capacity	Used	Combination
Each stud's line of 3 1/2" x 5" lag screws, lateral	NDS 12.3, 11.3 (Cg 0.978)	495 lb	660 lb	75%	D+S
The ledger's shear at its fasteners	NDS 3.4.3.3	165 lb	1,585 lb	10%	D+S (de = 2-1/4 in.)
The ledger's bending between fasteners	NDS 3.3	2,970 in-lb	150,697 in-lb	2%	D+S

Requirements

Requirement	Provided	Required	Reference	
Lag screw thread in the studs, less its tip	2 7/16"	2"	NDS 12.1.4.6	OK
Edge distance in the stud (each side)	3/4"	3/4"	NDS Table 12.5.1C (parallel to grain)	OK
Spacing up the stud	2"	2"	NDS Table 12.5.1B (parallel to grain)	OK

Tried: (3) 1/2 x 5 lags at each stud (16 in. o.c.) -- ok.
Tried: (6) 3/8 x 4 lags at each stud (16 in. o.c.) -- ok.
Tried: (5) No. 14 x 4 screws at each stud (16 in. o.c.) -- ok.
Tried: (6) 16d common nails at each stud (16 in. o.c.) -- ok.
Note: Length: 5 in., the shortest that develops the full value (196 lb; the longest that fits gives 196 lb) -- a longer one only goes deeper into the studs.
Note: LVL / LSL / PSL: fastener values by Weyerhaeuser's ESR-1387 equivalent specific gravity (another maker's are close; check its report).

LEDGER Rafters #4-3

Rafters #4 hangs on it at support 3, in an LRU28Z SLD40 rafter hanger, sloped 39.8° down in the field, 76%.
The 1 3/4 x 14 1.55E LSL ledger is fastened to 2x6 DF-L studs at 16 in., 1/2" sheathing between, dry service.
Its joists at 24" o.c. load it along its length: each one's reaction x 12 / 24 per foot of ledger.

Fastening: (2) 1/2 x 5 lags at each stud (16 in. o.c.) -- 70% to spare (30% used, D+S); picked automatically

SECTION 1 in. = 6.9 pt, true scale

Rafters #4, beyond
in an LRU28Z SLD40 rafter hanger, sloped 39.8° down in the field, 76%

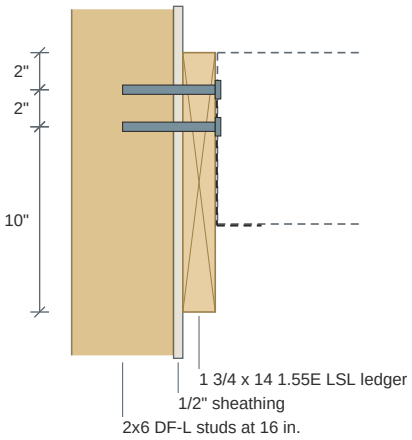

FACE OF THE LEDGER 1 in. = 5.6 pt, true scale

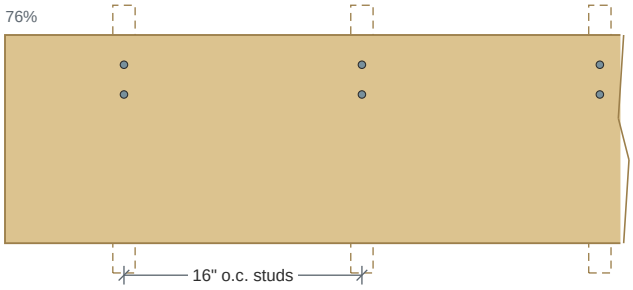

The load on the ledger, each ASD combination

Combination	Load, lb/ft of ledger	C_D
D	11	0.9
D+L	11	1
D+S	100	1.15
D+Lr	11	1.25
D+0.75L+0.75S	78	1.15
D+0.75L+0.75Lr	11	1.25

Each fastener -- the NDS 12.3 yield model, across the sheathing gap per AWC TR12

1/2" x 5" lag screw: Z = 196 lb, yield mode IV (two hinges in the fastener). The ledger (side member): G = 0.55, bearing length 1 3/4", Fes = 3,626 psi. What it hangs on (main member): G = 0.5, bearing length 2 5/8", Fem = 5,600 psi, penetration 2 3/4". Gap g = 1/2".

Checks

Check	Reference	Demand	Capacity	Used	Combination
Each stud's line of 2 1/2" x 5" lag screws, lateral	NDS 12.3, 11.3 (Cg 0.994)	134 lb	447 lb	30%	D+S
The ledger's shear at its fasteners	NDS 3.4.3.3	67 lb	1,585 lb	4%	D+S (de = 2-1/4 in.)
The ledger's bending between fasteners	NDS 3.3	803 in-lb	150,697 in-lb	1%	D+S

Requirements

Requirement	Provided	Required	Reference	
Lag screw thread in the studs, less its tip	2 7/16"	2"	NDS 12.1.4.6	OK
Edge distance in the stud (each side)	3/4"	3/4"	NDS Table 12.5.1C (parallel to grain)	OK
Spacing up the stud	2"	2"	NDS Table 12.5.1B (parallel to grain)	OK

Tried: (2) 1/2 x 5 lags at each stud (16 in. o.c.) -- ok.
Tried: (2) 3/8 x 4 lags at each stud (16 in. o.c.) -- ok.
Tried: (2) No. 14 x 4 screws at each stud (16 in. o.c.) -- ok.
Tried: (2) 16d common nails at each stud (16 in. o.c.) -- ok.
Note: Length: 5 in., the shortest that develops the full value (196 lb; the longest that fits gives 196 lb) -- a longer one only goes deeper into the studs.
Note: LVL / LSL / PSL: fastener values by Weyerhaeuser's ESR-1387 equivalent specific gravity (another maker's are close; check its report).

LEDGER Rafters #5-1

Rafters #5 hangs on it at support 1, in an LRU28Z SLD40 rafter hanger, sloped 39.8° down in the field, 37%.
The 1 3/4 x 14 1.55E LSL ledger is fastened to 2x6 DF-L studs at 16 in., 1/2" sheathing between, dry service.
Its joists at 24" o.c. load it along its length: each one's reaction x 12 / 24 per foot of ledger.

Fastening: (2) 1/2 x 5 lags at each stud (16 in. o.c.) -- 20% to spare (80% used, D+S); picked automatically

SECTION 1 in. = 6.9 pt, true scale

Rafters #5, beyond
in an LRU28Z SLD40 rafter hanger, sloped 39.8° down in the field, 37%

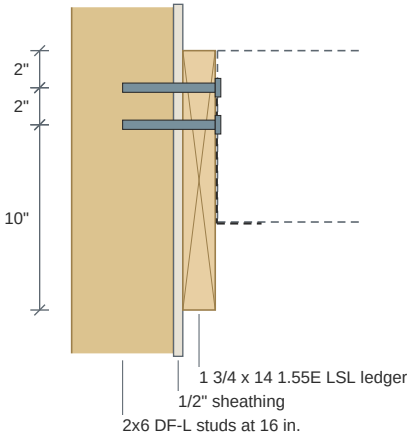

FACE OF THE LEDGER 1 in. = 5.6 pt, true scale

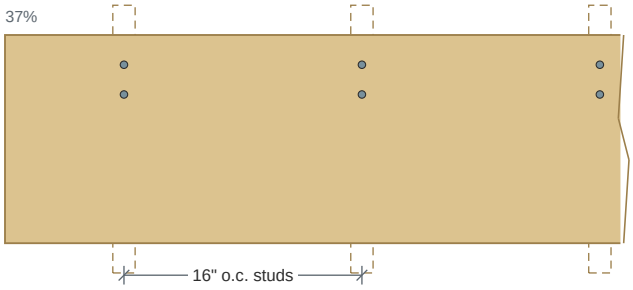

The load on the ledger, each ASD combination

Combination	Load, lb/ft of ledger	C_D
D	29	0.9
D+L	29	1
D+S	267	1.15
D+Lr	29	1.25
D+0.75L+0.75S	207	1.15
D+0.75L+0.75Lr	29	1.25

Each fastener -- the NDS 12.3 yield model, across the sheathing gap per AWC TR12

1/2" x 5" lag screw: Z = 196 lb, yield mode IV (two hinges in the fastener). The ledger (side member): G = 0.55, bearing length 1 3/4", Fes = 3,626 psi. What it hangs on (main member): G = 0.5, bearing length 2 5/8", Fem = 5,600 psi, penetration 2 3/4". Gap g = 1/2".

Checks

Check	Reference	Demand	Capacity	Used	Combination
Each stud's line of 2 1/2" x 5" lag screws, lateral	NDS 12.3, 11.3 (Cg 0.994)	356 lb	447 lb	80%	D+S
The ledger's shear at its fasteners	NDS 3.4.3.3	178 lb	1,585 lb	11%	D+S (de = 2-1/4 in.)
The ledger's bending between fasteners	NDS 3.3	2,135 in-lb	150,697 in-lb	1%	D+S

Requirements

Requirement	Provided	Required	Reference	
Lag screw thread in the studs, less its tip	2 7/16"	2"	NDS 12.1.4.6	OK
Edge distance in the stud (each side)	3/4"	3/4"	NDS Table 12.5.1C (parallel to grain)	OK
Spacing up the stud	2"	2"	NDS Table 12.5.1B (parallel to grain)	OK

Tried: (2) 1/2 x 5 lags at each stud (16 in. o.c.) -- ok.
Tried: (4) 3/8 x 4 lags at each stud (16 in. o.c.) -- ok.
Tried: (4) No. 14 x 4 screws at each stud (16 in. o.c.) -- ok.
Tried: (4) 16d common nails at each stud (16 in. o.c.) -- ok.
Note: Length: 5 in., the shortest that develops the full value (196 lb; the longest that fits gives 196 lb) -- a longer one only goes deeper into the studs.
Note: LVL / LSL / PSL: fastener values by Weyerhaeuser's ESR-1387 equivalent specific gravity (another maker's are close; check its report).

Beam Hanger Design

Tamarack Resort Lot 1 · Job 26-006 · Beam #20 3

10/25/2026
NDS 2018 (ASD) · AISC 360-16 · ASCE 7-16

PASSES · 53%

Governs: Beam: shear at the side bolts, uplift under D+S

Designed here: seat length, seat thickness, side-plate bolts, side plate thickness, face fastener diameter, face plate thickness, lag screw length, side plates raised for the uplift

Uplift rating **1,995 lb** (C_D 1.6) · Beam: shear at the side bolts, uplift

4 × 1/2" x 3" lag screws into a column / post

DRAWING

FACE PLATE (BEAM END SHOWN DASHED)

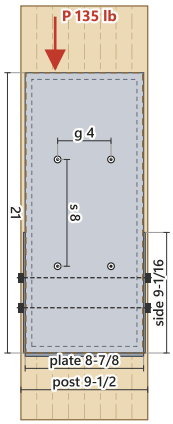

SIDE VIEW

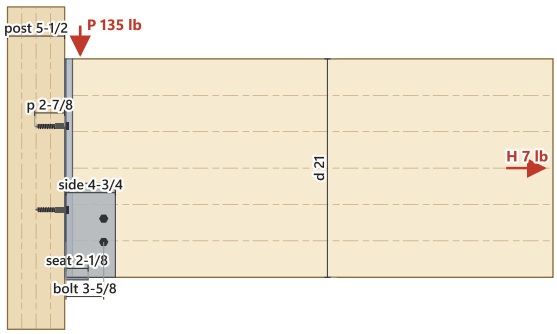

CONNECTOR

QTY	PLATE	L × W × T (IN)	WEIGHT
1	Face plate	21 × 8-7/8 × 1/8	6.6 lb
2	Side plates	4-3/4 × 9-1/16 × 1/8	3.0 lb
1	Seat plate	2-1/8 × 8-7/8 × 1/4	1.3 lb
1	Spacer frame	21 × 8-7/8 × 5/8	5.1 lb
	Steel	A36	**16.1 lb**

FASTENERS

Face plate	2 rows × 2 = 4 × 1/2" x 3" lag screws s 8 in, rows 4 in apart, top fastener 6-1/2 in down
Side plates	2 × 3/4" bolts through the beam 3-5/8 in from the face plate

MATERIAL LIST

QTY	ITEM	NOTE
4	1/2" x 3" hex lag screws	prebore lead holes (NDS 12.1.4.2); through the face plate into the column
4	1-1/16" narrow washers (1/2" lag screws)	under each head
2	3/4" x 10-1/2" hex bolts (A307) with nuts	through the side plates and the beam
1	Face plate 1/8 x 8-7/8 x 21 in (A36)	6.6 lb
2	Side plates 1/8 x 9-1/16 x 4-3/4 in (A36)	3.0 lb
1	Seat plate 1/4 x 8-7/8 x 2-1/8 in (A36)	1.3 lb
1	Spacer frame 5/8 x 8-7/8 x 21 in (A36)	5.1 lb

WELD (E70XX FILLET)	SIZE	LENGTH	NEEDS	MIN / MAX	
Seat to face plate	1/8	8-7/8	0.001	1/8 / 1/8	OK
Seat to each side plate	1/8	2-1/8	0.002	1/8 / 1/8	OK
Each side plate to face plate	1/8	9-1/16	0.006	1/8 / 1/8	OK
Spacer frame to face plate (holds it; carries no load)	1/8	59-3/4	0.000	1/8 / 1/8	OK

▾ WOOD (NDS 2018) 53%: Beam: shear at the side bolts, uplift

CHECK	REFERENCE	LOAD CASE	DEMAND	ALLOWABLE	ADEQUACY	
Beam: shear at the side bolts, uplift de = 7-15/16 in of d = 21 in, within 5d of the end; V = 100% of P	NDS 3.4.3.3(a)	D+S C_D 1.15	668	1,436	53%	OK
Face fasteners: lateral, uplift	NDS 12.3, 11.3.1	D+S C_D 1.15	668	1,873	64%	OK
Side-plate bolts in the beam: lateral, uplift	NDS 12.3, 11.3.1	D+S C_D 1.15	668	2,832	76%	OK
Face fasteners: lateral	NDS 12.3, 11.3.1	D C_D 0.9	135	1,466	91%	OK
Face lag screws: lateral + withdrawal P 135 and H 7 lb, resultant at 2.9 deg to the face	NDS 12.4.1	D + H C_D 1	135	1,631	92%	OK
Support: Main member: net section tension, uplift An = 22.30 in2	NDS 3.1.2, 3.8.1	D+S C_D 1.15	668	10,900	94%	OK
Beam bearing on the seat Fc-perp' 650 psi x 8-3/4 x 1-1/2 in bearing (past the spacer and gap)	NDS 3.10.1	D C_D 0.9	135	8,531	98%	OK
Side-plate bolts in the beam: lateral	NDS 12.3, 11.3.1	D + H C_D 1	7	2,528	100%	OK
Beam: row tear-out s_crit = 3 in	NDS Appendix E.3	D + H C_D 1	7	10,017	100%	OK
Beam: group tear-out A group-net = 12.58 in2	NDS Appendix E.4	D + H C_D 1	7	18,844	100%	OK
Beam: net section tension An = 169.53 in2	NDS 3.1.2, 3.8.1	D + H C_D 1	7	186,484	100%	OK

▾ **STEEL (AISC 360-16)** 94%: Face fasteners: steel shear, uplift (each)

CHECK	REFERENCE	LOAD CASE	DEMAND	ALLOWABLE	ADEQUACY	
Face fasteners: steel shear, uplift (each)	J3.6	D+S C_D 1.15	167	2,651	94%	OK
Seat plate: bending max moment 0.0363 q w^2 (face edge pinned or fixed, bearing uniform or at the toe)	F11; plate on 3 edges	D C_D 0.9	135	2,223	94%	OK
Face plate: fastener bearing and tear-out, uplift toward the plate's bottom	J3.10(a)	D+S C_D 1.15	668	17,400	96%	OK
Side plates: bolt bearing and tear-out, uplift (each) toward the plate's top, 1-1/8 in above the top bolt	J3.10(a)	D+S C_D 1.15	334	9,380	96%	OK
Side-plate bolts: shear, uplift (A307, double shear)	J3.6	D+S C_D 1.15	668	23,856	97%	OK
Side plates: in-plane bending at the face plate, uplift lb-in; the side bolts 3-5/8 in out	F11	D+S C_D 1.15	1,211	54,991	98%	OK
Side plates: shear, uplift (each)	J4.2(a)	D+S C_D 1.15	334	16,263	98%	OK
Face plate: shear at each side plate, uplift	J4.2(a)	D+S C_D 1.15	334	16,263	98%	OK
Face lag screws: steel shear (each)	J3.6	D C_D 0.9	34	2,651	99%	OK
Face plate: fastener bearing and tear-out	J3.10(a)	D C_D 0.9	135	17,400	99%	OK
Face plate: tension yielding	D2(a)	D C_D 0.9	135	23,915	99%	OK
Face plate: tension rupture at the fasteners An = 0.943 in2	D2(b), J4.1(b)	D C_D 0.9	135	27,346	100%	OK
Face plate: shear at each side plate	J4.2(a)	D C_D 0.9	68	16,263	100%	OK
Side plates: shear (each)	J4.2(a)	D C_D 0.9	68	16,263	100%	OK
Face plate: block shear	J4.3	D C_D 0.9	135	51,384	100%	OK
Side plates: in-plane bending at the face plate lb-in; seat reaction 1-3/8 in out	F11	D C_D 0.9	93	54,991	100%	OK
Face lag screws: tension with shear (each) 20.0 ksi on the root area	J3.7	D + H C_D 1	2	2,162	100%	OK
Side plates: bolt bearing and tear-out (each)	J3.10(a)	D + H C_D 1	3	6,253	100%	OK
Side-plate bolts: shear (A307, double shear)	J3.6	D + H C_D 1	7	23,856	100%	OK

CHECK	REFERENCE	LOAD CASE	DEMAND	ALLOWABLE	ADEQUACY		
Side plates: tension yielding (each)	D2(a)	D + H C_D 1	3	24,346	100%		OK
Side plates: tension rupture (each)	D2(b)	D + H C_D 1	3	26,408	100%		OK

▾ WELDS (AISC J2) 95%: Each side plate to face plate (1/8 in fillet, 9-1/16 in long)

CHECK	REFERENCE	LOAD CASE	DEMAND	ALLOWABLE	ADEQUACY		
Each side plate to face plate (1/8 in fillet, 9-1/16 in long) lb per inch; min 1/8, max 1/8	J2.4, Table J2.4, J2.2b	worst	96	1,856	95%		OK
Seat to each side plate (1/8 in fillet, 2-1/8 in long) lb per inch; min 1/8, max 1/8	J2.4, Table J2.4, J2.2b	worst	32	1,856	98%		OK
Seat to face plate (1/8 in fillet, 8-7/8 in long) lb per inch; min 1/8, max 1/8	J2.4, Table J2.4, J2.2b	worst	15	1,856	99%		OK
Spacer frame to face plate (holds it; carries no load) (1/8 in fillet, 59-3/4 in long) lb per inch; min 1/8, max 1/8	J2.4, Table J2.4, J2.2b	worst	0	1,856	100%		OK

▾ SPACING, EDGE, END DISTANCE, PENETRATION all met

MEMBER	REQUIREMENT	REFERENCE	PROVIDED	REQUIRED	MINIMUM	C_Δ	
Face plate	Lag screw penetration, less tip p = 2-25/32 in less tip E = 5/16 in	NDS 12.1.4.6	2-7/16 in	2 in			OK
Support	Spacing in a row, parallel	Table 12.5.1B	8 in	2 in	1-1/2 in	1.000	OK
Support	Edge distance, parallel, edge 1 l/D = 5.2	Table 12.5.1C	2-3/4 in	3/4 in			OK
Support	Edge distance, parallel, edge 2 l/D = 5.2	Table 12.5.1C	2-3/4 in	3/4 in			OK
Support	Spacing between rows, parallel	Table 12.5.1D	4 in	3/4 in			OK
Support	Outermost fasteners across the grain unless the detail lets the wood shrink (slotted holes, separate plates)	NDS 12.5.1.3	4 in	at most 5 in			OK
Side plates	Row spacing in plate	AISC J3.3	2-1/4 in	2-1/4 in	2 in		OK
Side plates	End distance in plate	AISC Table J3.4	1-1/8 in	1 in			OK
Side plates	Edge distance in plate	AISC Table J3.4	3-3/8 in	1 in			OK
Side plates	Edge distance in plate	AISC Table J3.4	3-3/8 in	1 in			OK
Beam	End distance, parallel tension	Table 12.5.1A	3 in	5-1/4 in	2-5/8 in	0.571	OK

MEMBER	REQUIREMENT	REFERENCE	PROVIDED	REQUIRED	MINIMUM	C_Δ	
Beam	Edge distance, parallel, edge 1 l/D = 11.7	Table 12.5.1C	5-11/16 in	1-1/8 in			OK
Beam	Edge distance, parallel, edge 2 l/D = 11.7	Table 12.5.1C	13-1/16 in	1-1/8 in			OK
Beam	Spacing between rows, parallel	Table 12.5.1D	2-1/4 in	1-1/8 in			OK
Beam	Outermost fasteners across the grain unless the detail lets the wood shrink (slotted holes, separate plates)	NDS Table 12.5.1F	2-1/4 in	at most 10 in			OK
Face plate	Face plate edge distance (sides)	AISC Table J3.4	2-7/16 in	3/4 in			OK
Face plate	Face plate edge distance (top)	AISC Table J3.4	6-1/2 in	3/4 in			OK
Face plate	Face fastener row spacing	AISC J3.3	4 in	1-5/16 in			OK
Face plate	Face fastener spacing	AISC J3.3	8 in	1-5/16 in			OK
Seat	Seat bearing (past the spacer and gap)	minimum (fabrication)	1-1/2 in	1-1/2 in			OK
Spacer	Fastener heads clear the beam end (spacer + gap)	NDS Tables L1/L2 head height + narrow washer	5/8 in	7/16 in			OK
Spacer	Fastener heads inside the spacer's opening (to its rim)	fit: head across corners / washer	1-15/16 in	1/2 in			OK
Beam (uplift)	End distance, perpendicular	Table 12.5.1A	3 in	3 in	1-1/2 in	1.000	OK
Beam (uplift)	Spacing in a row, perpendicular the attached member's requirement, at least 3D	Table 12.5.1B	2-1/4 in	2-1/4 in			OK
Beam (uplift)	Loaded edge distance	Table 12.5.1C	5-11/16 in	3 in			OK
Beam (uplift)	Unloaded edge distance	Table 12.5.1C	13-1/16 in	1-1/8 in			OK
Beam (uplift)	Outermost fasteners across the grain unless the detail lets the wood shrink (slotted holes, separate plates)	NDS Table 12.5.1F	2-1/4 in	at most 10 in			OK
Support (uplift)	Spacing in a row, parallel	Table 12.5.1B	8 in	2 in	1-1/2 in	1.000	OK
Support (uplift)	Edge distance, parallel, edge 1 l/D = 5.2	Table 12.5.1C	2-3/4 in	3/4 in			OK
Support (uplift)	Edge distance, parallel, edge 2 l/D = 5.2	Table 12.5.1C	2-3/4 in	3/4 in			OK
Support (uplift)	Spacing between rows, parallel	Table 12.5.1D	4 in	3/4 in			OK
Support (uplift)	Outermost fasteners across the grain unless the detail lets the wood shrink (slotted holes, separate plates)	NDS 12.5.1.3	4 in	at most 5 in			OK
Side plates	Side-plate bolts (two at least: his standard)	standard	2	2			OK

MEMBER	REQUIREMENT	REFERENCE	PROVIDED	REQUIRED	MINIMUM	C_Δ	
Support	Face plate no wider than the post's face the face plate is 8-7/8 in wide	the post's face	9-1/2 in	8-7/8 in			OK

FACE FASTENERS IN THE COLUMN / POST (NDS 12.3)

mode IIIs, 1,629 lb for 4

MODE	WHAT YIELDS	Z (LB)
II	fastener pivots, both members crush	619
IIIm	one hinge in the fastener, main member crushes	754
IIIs	one hinge in the fastener, side member crushes	410
IV	two hinges in the fastener	540
Im	main member bearing (crushing)	1,363
Is	side member bearing (crushing)	1,009

D in equations	371/1000 in root diameter Dr: threads bear on more than 1/4 of the main member length (12.3.7)
l_s / l_m	1/8 / 2-5/8 in
F_{es} / F_{em}	87,000 / 5,600 psi
C_M C_t C_g C_Δ	1 · 1 · 0.994 · 1.000
Group, C_D 1.0	1,629 lb (4 fasteners)

SIDE-PLATE BOLTS IN THE CARRIED BEAM (NDS 12.3)

mode IIIs, 2,528 lb for 2

MODE	WHAT YIELDS	Z (LB)
IIIs	one hinge in the fastener, side member crushes	2,212
IV	two hinges in the fastener	3,087
Im	main member bearing (crushing)	7,681
Is	side member bearing (crushing)	3,409

D in equations	627/1000 in root diameter Dr = 0.627 in: the threads bear in the 1/8 in side plate at the nut, more than 1/4 of it (12.3.7.2)
l_s / l_m	1/8 / 8-3/4 in
F_{es} / F_{em}	87,000 / 5,600 psi
C_M C_t C_g C_Δ	1 · 1 · 1.000 · 0.571
Group, C_D 1.0	2,528 lb (2 fasteners)

LOAD CASES

CASE	P (LB)	H (LB)	C_D
D	135	0	0.9
D + H	135	7	1

Seat plate: largest plate moment 0.0363 q w^2 (three edges, face edge pinned or fixed, bearing uniform or toe-peaked). Beam Fc-perp' 650 psi.

NOTES AND LIMITS

- Pull-out H = 7 lb: 5% of D + L + Lr (ASCE 7 1.4.4 minimum tie, snow counted), with each gravity combination
- Side bolts 5-11/16 in above the beam's bottom, not centred on the 9-1/16 in side plates: 4D, NDS Table 12.5.1C's loaded edge when the beam lifts
- Spacer frame 5/8 in thick, 1/2 in rim, on the seat between the side plates: the recess for the fastener heads and the beam's stop; the beam bears on 1-1/2 in of the 2-1/8 in seat
- No room on the side plates for the cut-in mark (10-5/16 x 1-13/16 in of worst-case plasma letters, clear of the welds, the washers and the slot): mark them by hand
- Uplift rating 1,995 lb at C_D 1.6 (as Simpson's 160): Beam: shear at the side bolts, uplift; 668 lb uplift (D+S, C_D 1.15) checked above

Not checked here:

- Face plate bending between lag screws under pull-out (prying)
- The seat's eccentricity (1-3/8 in from the face plate) as a moment on the face fasteners
- The column's own capacity for the eccentric reaction
- Main member: compression at the net section (NDS 3.6.3)

Adjustable and Standoff Post Bases

Additional standoff bases are on p. 360.

The AB series of retrofit adjustable post bases provide a 1" standoff for the post, are slotted for adjustability and can be installed with nails, Strong-Drive® SD Connector screws or bolts (ABU). Depending on the application needs, these adjustable standoff post bases are designed for versatility, cost-effectiveness and maximum uplift performance.

Features:

- The slot in the base enables flexible positioning around the anchor bolt, making precise post placement easier
- The 1" standoff helps prevent rot at the end of the post and meets code requirements for structural posts installed in basements or exposed to weather or water splash

Material: Varies (see table)

Finish: ZMAX® coating and some in stainless steel

Installation:

- Use all specified fasteners; see General Notes.
- See our *Anchoring, Fastening, Restoration and Strengthening Systems for Concrete and Masonry* catalog, or visit **strongtie.com** for retrofit anchor options, such as Titen HD®, Stainless-Steel Titen HD or SET-3G®.
- Post bases do not provide adequate resistance to prevent members from rotating about the base and therefore are not recommended for non-top-supported installations (such as fences or unbraced carports).
- Place the base, cut washer(s) or load transfer plate(s) and nut(s) on the anchor bolt(s). Make any necessary adjustments to post placement and tighten the nut securely on the anchor bolt.
- Base anchors must extend less than 1" from concrete to avoid interference with standoff.
- See **strongtie.com** for information on hollow column installation.

ABW

Place the standoff base and then the post in the ABW and fasten on three vertical sides, using nails or Strong-Drive SD Connector screws

– Bend up the fourth side of the ABW and fasten using the correct fasteners

ABU

Place the standoff base and then the post in the ABU

– Fasten using nails or Strong-Drive SD Connector screws or bolts (ABU88Z, ABU1010Z, ABU1212Z – SDS optional)

ABA

Place the post in the ABA

– Fasten using nails or Strong-Drive SD Connector screws

Codes: See p. 12 for Code Reference Key Chart

Web Applications: Visit **app.strongtie.com/pfd** to access our Post-to-Foundation Designer web application.

SD Many of these products are approved for installation with Strong-Drive SD Connector screws. See pp. 380–382 for more information.

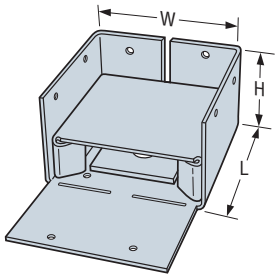

ABWZ

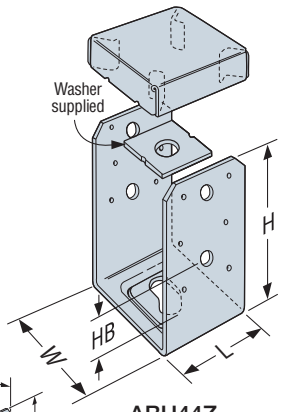

ABU44Z
(other sizes similar)

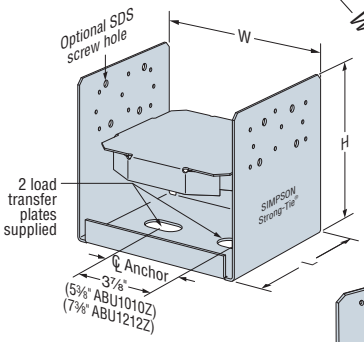

ABU88Z
(other sizes similar)

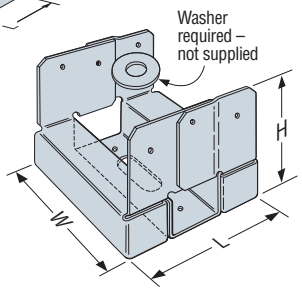

ABA44Z
(other sizes similar)

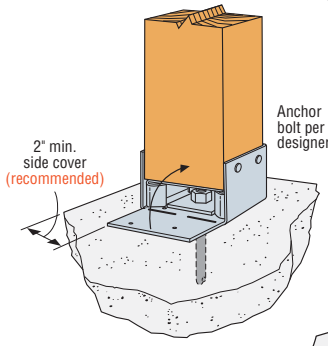

Typical ABWZ Installation

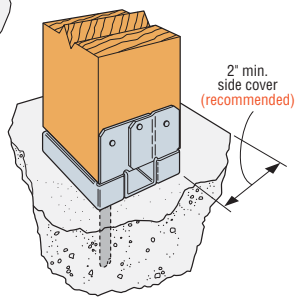

Typical ABA44Z Installation

Allowable Loads — Beam Installation

Model No.	Nominal Beam Size	Material (ga.)		Dimensions (in.)			Fasteners (in.)		DF/SP Allowable Loads		SPF/HF Allowable Loads	
		Base	Strap	W	L	H	Anchor Dia.	Nails	Uplift (160)	Down (100)	Uplift (160)	Down (100)
ABA24-2Z	Double 2x	16	16	3⅛	3⅜	3⅛	½	(6) 0.148 x 2½	640	4,425	585	3,140
ABU46Z	Double 2x	12	12	3⅜	5	7	⅝	(12) 0.162 x 3½	2,030	8,475	1,820	6,075
ABU46Z	4x	12	12	3⅜	5	7	⅝	(12) 0.162 x 3½	2,155	9,890	1,850	7,090
ABU46RZ	Rough 4x	12	12	4⅛	5	6¾	⅝	(12) 0.162 x 3½	2,155	9,890	1,850	7,090
ABU66Z	Triple 2x	12	10	5½	5	6⅛	⅝	(12) 0.162 x 3½	1,405	12,715	1,165	9,115
ABU66Z	6x	12	10	5½	5	6⅛	⅝	(12) 0.162 x 3½	1,905	12,920	1,640	11,110
ABU66RZ	Rough 6x	12	10	6⅛	5	5 13⁄16	⅝	(12) 0.162 x 3½	1,905	12,920	1,640	11,110

1. Uplift loads have been increased for earthquake or wind loading with no further increase allowed. Reduce where other loads govern.
2. Downloads may not be increased for short-term loading.
3. Specifier is to design concrete and anchorage for uplift capacity.
4. Beam depth must be a minimum of 7¼".
5. Shims are required for ABU46Z double 2x (1 shim) and ABU66Z triple 2x (2 shims) installations as shown in the illustration. Additional fastening of shim to beam is not required.
6. **Fasteners:** Nail dimensions are listed diameter by length. See pp. 25–26 for fastener information.

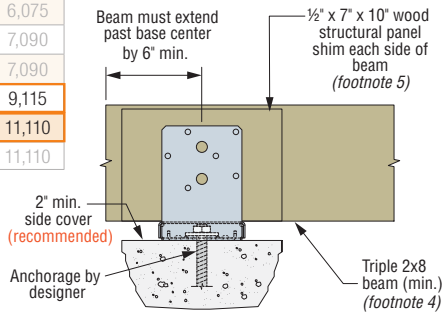

ABU66Z Beam Installation

C-C-2026 © 2026 SIMPSON STRONG-TIE COMPANY INC.

Post Caps

The BCS allows for the connection of (2) 2x's to a 4x post or (3) 2x's to a 6x post. Double-shear nailing between beam and post gives added strength. The BC series offers dual purpose post cap/base for light cap or base connections.

Material: 18 gauge

Finish: Galvanized. Some products available in ZMAX® coating.

Installation:

- Use all specified fasteners; see General Notes
- Do not install bolts into pilot holes
- BCS — Install dome nails on beam; drive nails at an angle through the beam into the post below to achieve the table loads
- BC — Install with 0.162" x 3½" nails or 0.162" x 2½" nails
- Post bases do not provide adequate resistance to prevent members from rotating about the base and therefore are not recommended for non-top-supported installations (such as fences or unbraced carports)
- To tie multiple 2x members together, the designer must determine the fasteners required to join members to act as one unit without splitting the wood

Codes: See p. 12 for Code Reference Key Chart

Web Applications: Visit **app.strongtie.com/pbs** to access our Post-to-Beam Selector web application.

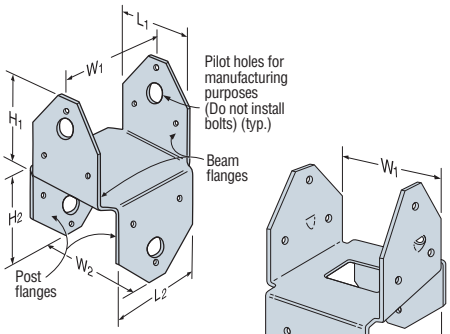

BC4 Cap/Base
(BC6 similar)

BCS2-2/4

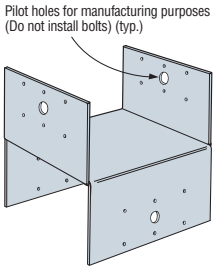

BC8 Cap/Base

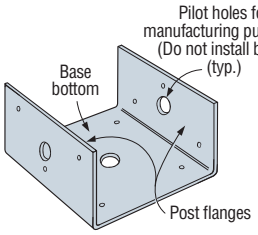

BC60 Half Base
(other similar)

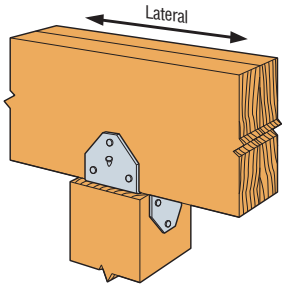

Typical BCS Installation

These products are available with additional corrosion protection. For more information, see pp. 13–19.

SS For stainless-steel fasteners, see p. 25.

SD Many of these products are approved for installation with Strong-Drive® SD Connector screws. See pp. 380–382 for more information.

	Model No.	Dimensions (in.)						Fasteners (in.)			DF/SP Allowable Loads (160)		Code Ref.
		W_1	W_2	L_1	L_2	H_1	H_2	Beam Flange	Post Flange	Base Bottom	Uplift	Lateral	
	Caps												
SS	BC4	3⁹⁄₁₆	3⁹⁄₁₆	2⅞	2⅞	3	3	(6) 0.162 x 3½	(6) 0.162 x 3½	—	605	1,000	IBC, FL, LA
	BC46	3⁹⁄₁₆	5½	4⅞	2⅞	3½	2½	(12) 0.162 x 3½	(6) 0.162 x 3½	—	945	1,000	
	BC4R	4	4	4	4	3	3	(12) 0.162 x 3½	(12) 0.162 x 3½	—	605	1,000	
SS	BC6	5½	5½	4⅜	4⅜	3⅜	3⅜	(12) 0.162 x 3½	(12) 0.162 x 3½	—	1,185	1,825	
	BC6R	6	6	6	6	3	3	(12) 0.162 x 3½	(12) 0.162 x 3½	—	1,185	1,825	
	BC8	7½	7½	7½	7½	4	4	(12) 0.162 x 3½	(12) 0.162 x 3½	—	1,660	1,825	
SS	BCS2-2/4	3⅛	3⁹⁄₁₆	2⅞	2⅞	2¹⁵⁄₁₆	2¹⁵⁄₁₆	(8) 0.148 x 3	(6) 0.148 x 3	—	895	890	
SS	BCS2-3/6	4⅝	5⁹⁄₁₆	4⅜	2⅞	3⁹⁄₁₆	2¹⁵⁄₁₆	(12) 0.162 x 3½	(6) 0.162 x 3½	—	895	1,330	
	Bases												
SS	BC40	3⁹⁄₁₆	—	3¼	—	2¼	—	—	(6) 0.162 x 3½	(4) 0.162 x 3½	510	735	
	BC40R	4	—	4	—	3	—	—	(6) 0.162 x 3½	(4) 0.162 x 3½	510	735	
	BC460	5½	—	3⅜	—	3	—	—	(6) 0.162 x 3½	(4) 0.162 x 3½	450	735	
	BC60	5½	—	5½	—	3	—	—	(6) 0.162 x 3½	(4) 0.162 x 3½	450	735	—
	BC60R	6	—	6	—	3	—	—	(6) 0.162 x 3½	(4) 0.162 x 3½	450	735	
	BC80	7½	—	7½	—	4	—	—	(6) 0.162 x 3½	(4) 0.162 x 3½	450	735	
	BC80R	8	—	8	—	4	—	—	(6) 0.162 x 3½	(4) 0.162 x 3½	450	735	

1. Allowable loads have been increased for wind or earthquake loading with no further increase allowed. Reduce where other loads govern.
2. Structural composite lumber columns have sides that show either the wide face or the edges of the lumber strands/veneers known as the narrow face. Values in the tables reflect installation into the wide face. See technical bulletin T-C-SCLCLM at **strongtie.com** for load reductions resulting from narrow-face installations.
3. Base allowable loads assume that nails have full penetration into the supporting member. Loads do not apply to end-grain post installations.
4. Spliced beams, where the ends of two beams are supported by the wood post and connected to the BC post cap connector, are not permitted.
5. **Fasteners:** Nail dimensions are listed diameter by length. See pp. 25–26 for fastener information.

C-C-2026 © 2026 SIMPSON STRONG-TIE COMPANY INC.

Simpson Strong-Tie® Wood Construction Connectors

CCQ™/ECCQ™

Column Caps (cont.)

These products are available with additional corrosion protection. For more information, see pp. 13–19.

SS For stainless-steel fasteners, see p. 25.

	Model No.	Beam Width (in.)	Dimensions (in.)					No. of ¼" x 2½" SDS Screws			DF/SP Allowable Loads				Code Ref.	CCOQ/ECCOQ Model No. (No Legs)
			W_1	W_2	L		H	Beam		Post	CCQ		ECCQ			
					CCQ	ECCQ		CCQ	ECCQ		Uplift	Down	Uplift	Down		
											(160)	(100)	(160)	(100)		
SS	CCQ3-4SDS2.5	3⅛	3¼	3⅝	11	8½	7	16	14	14	5,370	16,980	3,465	6,125	IBC, FL, LA	CCOQ3-SDS2.5 ECCOQ3-SDS2.5
SS	CCQ3-6SDS2.5	3⅛	3¼	5½	11	8½	7	16	14	14	5,370	21,485	3,465	10,740		
SS	CCQ44SDS2.5	3½	3⅝	3⅝	11	8½	7	16	14	14	5,370	19,020	3,785	7,655		CCOQ4-SDS2.5 ECCOQ4-SDS2.5
SS	CCQ46SDS2.5	3½	3⅝	5½	11	8½	7	16	14	14	6,785	24,065	3,785	12,030		
SS	CCQ48SDS2.5	3½	3⅝	7½	11	8½	7	16	14	14	6,785	24,065	3,785	16,405		
	CCQ4.62-3.62SDS	4½	4⅝	3⅝	11	8½	7	16	14	14	5,370	23,390	3,785	9,845		CCOQ4.62-SDS2.5 ECCOQ4.62-SDS2.5
	CCQ4.62-4.62SDS	4½	4⅝	4⅝	11	8½	7	16	14	14	5,370	30,070	3,785	12,655		
	CCQ4.62-5.50SDS	4½	4⅝	5½	11	8½	7	16	14	14	6,785	30,940	3,785	15,470		
SS	CCQ5-4SDS2.5	5⅛	5¼	3⅝	11	8½	7	16	14	14	5,370	26,635	3,785	11,210		CCOQ5-SDS2.5 ECCOQ5-SDS2.5
SS	CCQ5-6SDS2.5	5⅛	5¼	5½	11	8½	7	16	14	14	6,785	28,190	5,355	17,615		
SS	CCQ5-8SDS2.5	5⅛	5¼	7½	11	8½	7	16	14	14	6,785	35,235	5,355	24,025		
SS	CCQ64SDS2.5	5¼, 5½	5½	3⅝	11	8½	7	16	14	14	5,370	28,585	3,785	12,030		CCOQ6-SDS2.5 ECCOQ6-SDS2.5
SS	CCQ66SDS2.5	5¼, 5½	5½	5½	11	8½	7	16	14	14	6,785	30,250	3,785	18,905		
SS	CCQ68SDS2.5	5¼, 5½	5½	7½	11	8½	7	16	14	14	6,785	37,815	3,785	25,780		
SS	CCQ6-7.13SDS2.5	5¼, 5½	5½	7⅛	11	8½	7	16	14	14	6,785	37,815	3,785	24,490		
SS	CCQ74SDS2.5	6¾	6⅞	3⅝	11	8½	7	16	14	14	5,370	33,490	3,785	15,355		CCOQ7-SDS2.5 ECCOQ7-SDS2.5
SS	CCQ76SDS2.5	6¾	6⅞	5½	11	8½	7	16	14	14	6,785	37,125	5,355	24,130		
	CCQ77SDS2.5	6¾	6⅞	6⅞	11	8½	7	16	14	14	6,785	48,265	5,355	29,615		
	CCQ78SDS2.5	6¾	6⅞	7½	11	8½	7	16	14	14	6,785	48,265	5,355	32,905		
SS	CCQ7.1-4SDS2.5	7	7⅛	3⅝	11	8½	7	16	14	14	5,370	34,730	3,785	18,375		CCOQ7.12-SDS2.5 ECCOQ7.12-SDS2.5
SS	CCQ7.1-6SDS2.5	7	7⅛	5½	11	8½	7	16	14	14	6,785	38,500	5,355	28,875		
	CCQ7.1-7.1SDS2.5	7	7⅛	7⅛	11	8½	7	16	14	14	6,785	57,750	5,355	36,750		
	CCQ7.1-8SDS2.5	7	7⅛	7½	11	8½	7	16	14	14	6,785	52,500	5,355	39,375		
	CCQ84SDS2.5	7½	7½	3⅝	11	8½	7	16	14	14	6,785	37,210	5,355	16,405		CCOQ8-SDS2.5 ECCOQ8-SDS2.5
	CCQ86SDS2.5	7½	7½	5½	11	8½	7	16	14	14	6,785	41,250	5,355	25,780		
	CCQ88SDS2.5	7½	7½	7½	11	8½	7	16	14	14	6,785	51,565	5,355	35,155		
	CCQ94SDS2.5	8¾	8⅞	3⅝	11	8½	7	16	14	14	6,785	47,545	5,355	19,905		CCOQ9-SDS2.5 ECCOQ9-SDS2.5
	CCQ96SDS2.5	8¾	8⅞	5½	11	8½	7	16	14	14	6,785	48,125	5,355	31,280		
	CCQ98SDS2.5	8¾	8⅞	7½	11	8½	7	16	14	14	6,785	62,565	5,355	42,655		
	CCQ106SDS2.5	9¼	9½	5½	11	8½	7	16	14	14	6,785	52,250	5,355	32,655		CCOQ10-SDS2.5 ECCOQ10-SDS2.5

1. Uplift loads have been increased for earthquake or wind loading with no further increase allowed. Reduce where other loads govern.
2. Downloads shall be reduced where limited by capacity of the post.
3. Uplift loads do not apply to spliced conditions. Spliced conditions must be detailed by the designer to transfer tension loads between spliced members by means other than the post cap.
4. Spliced conditions must be detailed by the designer to transfer tension loads between spliced members by means other than the column cap.
5. Column sides are assumed to be aligned in the same vertical plane as the beam sides. CCQ4.62 models assume a minimum 3½"-wide post.
6. Structural composite lumber columns have sides that show either the wide face or the edges of the lumber strands/veneers known as the narrow face. Values in the tables reflect installation into the wide face. See technical bulletin T-C-SCLCLM at **strongtie.com** for load reductions resulting from narrow-face installations.
7. Beam depth must be a minimum of 7".
8. For 5¼" engineered lumber, use 5½" models.
9. CCOQ and ECCOQ welded to a steel column will achieve maximum load listed for the beam and the post cap as CCQ and ECCQ. The steel column width shall match the beam width. Weld by designer.

C-C-2026 © 2026 SIMPSON STRONG-TIE COMPANY INC.

Simpson Strong-Tie® Wood Construction Connectors

Face-Mount Hangers — Solid Sawn Lumber (DF/SP)

SIMPSON Strong-Tie

The Simpson Strong-Tie Hanger Selector enables you to select the most optimum product for your project. Visit **app.strongtie.com/hs** to access our Hanger Selector web application that takes into consideration all the characteristics seen in this catalog.

HS Hanger Selector

These products are available with additional corrosion protection. For more information, see pp. 13–19.

SS For stainless-steel fasteners, see p. 25.

SD Many of these products are approved for installation with Strong-Drive® SD Connector screws. See pp. 380–382 for more information.

Joist Size	Model No.	Ga.	Dimensions (in.) W	H	B	Min./ Max.	Fasteners (in.) Header	Joist	DF/SP Allowable Loads (lb.) Uplift (160)	Floor (100)	Snow (115)	Roof (125)	Installed Cost Index (ICI)	Code Ref.
Sawn Lumber Sizes														
2X4	LU24	20	1⁹⁄₁₆	3⅛	1½	—	(4) 0.162 x 3½	(2) 0.148 x 1½	240	555	630	655	Lowest	
	LUS24	18	1⁹⁄₁₆	3⅛	1¾	—	(4) 0.148 x 3	(2) 0.148 x 3	435	670	765	820	3%	
	U24	16	1⁹⁄₁₆	3⅛	1½	—	(4) 0.162 x 3½	(2) 0.148 x 1½	240	575	650	705	67%	
	HU26	14	1⁹⁄₁₆	3⅛	2¼	—	(4) 0.162 x 3½	(2) 0.148 x 1½	305	595	670	720	295%	
DBL 2X4	LUS24-2	18	3⅛	3⅛	2	—	(4) 0.162 x 3½	(2) 0.162 x 3½	410	800	905	980	Lowest	
	U24-2	16	3⅛	3	2	—	(4) 0.162 x 3½	(2) 0.148 x 3	240	575	650	705	33%	
	HU24-2 / HUC24-2	14	3⅛	3⅛	2½	—	(4) 0.162 x 3½	(2) 0.148 x 3	380	595	670	720	240%	
SS	LUS26	18	1⁹⁄₁₆	4¾	1¾	—	(4) 0.148 x 3	(4) 0.148 x 3	1,165	865	990	1,060	Lowest	
	LU26	20	1⁹⁄₁₆	4¾	1½	—	(6) 0.162 x 3½	(4) 0.148 x 1½	540	835	950	1,030	6%	
2x6	U26	16	1⁹⁄₁₆	4¾	2	—	(6) 0.162 x 3½	(4) 0.148 x 1½	535	865	980	1,055	43%	
SS	LUC26Z	18	1⁹⁄₁₆	4¾	1¾	—	(6) 0.162 x 3½	(4) 0.148 x 1½	730	845	965	1,040	160%	
	HU26	14	1⁹⁄₁₆	3⅛	2¼	—	(4) 0.162 x 3½	(2) 0.148 x 1½	305	595	670	720	179%	
	HUS26	16	1⅝	5⅜	3	—	(14) 0.162 x 3½	(6) 0.162 x 3½	1,320	2,735	3,095	3,230	276%	
SS	LUS26-2	18	3⅛	4⅞	2	—	(4) 0.162 x 3½	(4) 0.162 x 3½	1,060	1,030	1,170	1,265	Lowest	
DBL 2X6	U26-2	16	3⅛	5	2	—	(8) 0.162 x 3½	(4) 0.148 x 3	535	1,150	1,305	1,410	65%	
	HUS26-2	14	3⅛	5³⁄₁₆	2	—	(4) 0.162 x 3½	(4) 0.162 x 3½	1,165	1,090	1,225	1,320	172%	
	HU26-2 / HUC26-2	14	3⅛	4¹⁵⁄₁₆	2½	Min.	(8) 0.162 x 3½	(4) 0.148 x 3	755	1,190	1,345	1,440	233%	
		14	3⅛	4¹⁵⁄₁₆	2½	Max.	(12) 0.162 x 3½	(6) 0.148 x 3	1,135	1,785	2,015	2,165	254%	
TPL 2x6	LUS26-3	18	4⅝	4⅛	2	—	(4) 0.162 x 3½	(4) 0.162 x 3½	1,060	1,030	1,170	1,265	*	
	U26-3	16	4⅝	4¼	2	—	(8) 0.162 x 3½	(4) 0.148 x 3	535	1,150	1,305	1,410	*	
	HU26-3 / HUC26-3	14	4¹¹⁄₁₆	4⅝	2½	Min.	(8) 0.162 x 3½	(4) 0.148 x 3	755	1,190	1,345	1,440	*	IBC, FL, LA
		14	4¹¹⁄₁₆	4⅝	2½	Max.	(12) 0.162 x 3½	(6) 0.148 x 3	1,135	1,785	2,015	2,165	*	
SS	LUS26	18	1⁹⁄₁₆	4¾	1¾	—	(4) 0.148 x 3	(4) 0.148 x 3	1,165	865	990	1,060	Lowest	
	LU26	20	1⁹⁄₁₆	4¾	1½	—	(6) 0.162 x 3½	(4) 0.148 x 1½	540	835	950	1,030	6%	
SS	LUS28	18	1⁹⁄₁₆	6⅝	1¾	—	(6) 0.148 x 3	(4) 0.148 x 3	1,165	1,100	1,260	1,350	23%	
2x8	LU28	20	1⁹⁄₁₆	6⅜	1½	—	(8) 0.162 x 3½	(6) 0.148 x 1½	850	1,110	1,180	1,180	39%	
	U26	16	1⁹⁄₁₆	4¾	2	—	(6) 0.162 x 3½	(4) 0.148 x 1½	535	865	980	1,055	43%	
SS	LUC26Z	18	1⁹⁄₁₆	4¾	1¾	—	(6) 0.162 x 3½	(4) 0.148 x 1½	730	845	965	1,040	160%	
	HU28	14	1⁹⁄₁₆	5¼	2¼	—	(6) 0.162 x 3½	(4) 0.148 x 1½	605	895	1,010	1,080	251%	
	HUS26	16	1⅝	5⅜	3	—	(14) 0.162 x 3½	(6) 0.162 x 3½	1,320	2,735	3,095	3,230	276%	
	HUS28	16	1⅝	7¹⁄₁₆	3	—	(22) 0.162 x 3½	(8) 0.162 x 3½	1,760	4,095	4,095	4,095	409%	
SS	LUS26-2	18	3⅛	4⅞	2	—	(4) 0.162 x 3½	(4) 0.162 x 3½	1,060	1,030	1,170	1,265	Lowest	
SS	LUS28-2	18	3⅛	7	2	—	(6) 0.162 x 3½	(4) 0.162 x 3½	1,060	1,315	1,490	1,610	8%	
DBL 2x8	U26-2	16	3⅛	5	2	—	(8) 0.162 x 3½	(4) 0.148 x 3	535	1,150	1,305	1,410	65%	
	HUS28-2	14	3⅛	7³⁄₁₆	2	—	(6) 0.162 x 3½	(6) 0.162 x 3½	1,320	1,630	1,840	1,980	188%	
SS	HU28-2 / HUC28-2	14	3⅛	6⅝	2½	Min.	(10) 0.162 x 3½	(4) 0.148 x 3	755	1,490	1,680	1,800	397%	
		14	3⅛	6⅝	2½	Max.	(14) 0.162 x 3½	(6) 0.148 x 3	1,135	2,085	2,350	2,530	418%	
	LUS28-3	18	4⅝	6¼	2	—	(6) 0.162 x 3½	(4) 0.162 x 3½	1,060	1,315	1,490	1,610	*	
TPL 2X8	U26-3	16	4⅝	4¼	2	—	(8) 0.162 x 3½	(4) 0.148 x 3	535	1,150	1,305	1,410	*	
	HU26-3 / HUC26-3	14	4¹¹⁄₁₆	4⅝	2½	Min.	(8) 0.162 x 3½	(4) 0.148 x 3	755	1,190	1,345	1,440	*	
		14	4¹¹⁄₁₆	4⅝	2½	Max.	(12) 0.162 x 3½	(6) 0.148 x 3	1,135	1,785	2,015	2,165	*	
QUAD 2X8	HU28-4 / HUC28-4	14	6⅛	7	2½	Min.	(10) 0.162 x 3½	(4) 0.162 x 3½	755	1,490	1,680	1,800	*	—
		14	6⅛	7	2½	Max.	(14) 0.162 x 3½	(6) 0.162 x 3½	1,135	2,085	2,350	2,530	*	

See footnotes on p. 118.

Codes: See p. 12 for Code Reference Key Chart

C-C-2026 © 2026 SIMPSON STRONG-TIE COMPANY INC.

LRUZ

Face-Mount Rafter Hanger

The LRUZ offers an economic alternative for those applications requiring a sloped hanger for rafter-to-ridge connections. Used with solid sawn rafters, the LRUZ's unique design enables the hanger to be installed either before or after the rafter is in place. The field-adjustable seat helps improve job efficiency by eliminating mismatched angles in the field and lead times associated with special orders. The LRUZ offers comparable or better load capacity to other rafter hangers at a reduced cost while using fewer fasteners.

Features:

- The open design and ability to field-adjust the slope make the LRUZ ideal for both retrofit or new applications.
- May be sloped down from 0° (0:12 pitch) to 49° (14:12). For slopes greater than 45°, allowable downloads are 0.85 of table loads.
- May be sloped up from 0° to 45°.
- For added versatility, the fasteners on the face of the hanger are placed high enabling the bottom of the rafter to hang below the ridge beam (see "Max. C_1" dimension).
- Can be installed using nails or Strong-Drive® SD Connector screws.

Material: 18 gauge

Finish: ZMAX® coating

Installation:

- Use all specified fasteners; see General Notes
- Joist fasteners must be installed at an angle through the rafter or joist into the header to achieve the table loads
- See alternate installation on p. 127 for retrofit applications

Codes: See p. 12 for Code Reference Key Chart

Web Applications: Visit **app.strongtie.com/hs** to access our Hanger Selector web application.

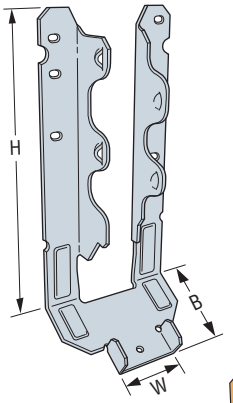

LRU28Z
(other models similar)

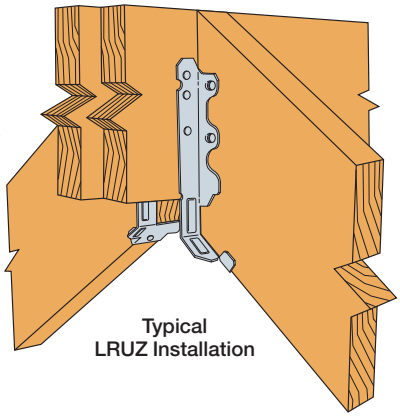

Typical LRUZ Installation



Double-Shear Nailing Top View

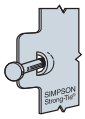

Dome Double-Shear Nailing Side View

These products are available with additional corrosion protection. For more information, see pp. 13–19.

SD Many of these products are approved for installation with Strong-Drive® SD Connector screws. See pp. 380–382 for more information.

Standard Installation

Model No.	Dimensions (in.)				Fasteners (in.)		DF/SP Allowable Loads				SPF/HF Allowable Loads				Code Ref.
	W	H	B	Max. C_1	Face	Joist	Uplift (160)	Floor (100)	Snow (115)	Roof (125)	Uplift (160)	Floor (100)	Snow (115)	Roof (125)	
LRU26Z	1⁹⁄₁₆	5¼	1¹⁵⁄₁₆	1¾	(4) 0.162 x 3½	(5) 0.162 x 3½	810	1,030	1,175	1,275	695	885	1,010	1,095	IBC, FL, LA
					(4) 0.148 x 3	(5) 0.148 x 3	600	865	990	990	515	745	850	850	
					(4) #10 x 2½" SD	(5) #10 x 2½" SD	770	1,215	1,395	1,425	660	935	1,075	1,170	
					(4) #10 x 1½" SD	(5) #10 x 2½" SD	770	1,045	1,200	1,305	660	830	950	1,035	
LRU28Z	1⁹⁄₁₆	6¹⁵⁄₁₆	1¹⁵⁄₁₆	2⅝	(6) 0.162 x 3½	(5) 0.162 x 3½	810	1,315	1,340	1,340	695	1,130	1,150	1,150	
					(6) 0.148 x 3	(5) 0.148 x 3	805	1,050	1,050	1,050	690	905	905	905	
					(6) #10 x 2½" SD	(5) #10 x 2½" SD	1,025	1,480	1,480	1,480	880	1,265	1,270	1,270	
					(6) #10 x 1½" SD	(5) #10 x 2½" SD	1,025	1,390	1,480	1,480	880	1,105	1,270	1,270	
LRU210Z	1⁹⁄₁₆	8³⁄₁₆	1¹⁵⁄₁₆	1¾	(6) 0.162 x 3½	(7) 0.162 x 3½	1,015	1,550	1,620	1,620	875	1,335	1,395	1,395	
					(6) 0.148 x 3	(7) 0.148 x 3	1,015	1,295	1,480	1,495	875	1,115	1,275	1,285	
					(6) #10 x 2½" SD	(7) #10 x 2½" SD	1,510	1,805	1,805	1,805	1,300	1,405	1,550	1,550	
					(6) #10 x 1½" SD	(7) #10 x 2½" SD	1,510	1,570	1,805	1,805	1,300	1,240	1,430	1,550	
LRU212Z	1⁹⁄₁₆	10¹¹⁄₁₆	1¹⁵⁄₁₆	3½	(6) 0.162 x 3½	(7) 0.162 x 3½	1,305	1,550	1,765	1,910	1,120	1,335	1,520	1,645	
					(6) 0.148 x 3	(7) 0.148 x 3	1,305	1,295	1,430	1,430	1120	1,115	1,230	1,230	
					(6) #10 x 2½" SD	(7) #10 x 2½" SD	1,850	1,820	1,915	1,915	1,590	1,405	1,615	1,645	
					(6) #10 x 1½" SD	(7) #10 x 2½" SD	1,850	1,570	1,805	1,915	1,590	1,240	1,430	1,555	

1. Uplift loads have been increased for earthquake or wind loading with no further increase allowed. Reduce where other loads govern.
2. Allowable loads are based on a minimum 3" carrying member. For single 2x carrying members, use 0.148" x 1½" nails in the face and 0.148" x 3" in the joist, and reduce the allowable load to 0.81 of the tabulated value for 0.148" x 3" nails. Alternatively, use #10 x 1½" Strong-Drive SD Connector screws in the face and #10 x 2½" SD Connector screws in the joist as shown in the table.
3. **Fasteners:** Nail dimensions are listed diameter by length. SD screws are Simpson Strong-Tie Strong-Drive SD Connector screws. See pp. 25–26 for fastener information.

C-C-2026 ©2026 SIMPSON STRONG-TIE COMPANY INC.

PF/PFB/PFDB

Post-Frame Top-Flange Hangers

The PF series hangers have been designed to accommodate collated 0.148" x 1½" nails as well as 0.148" x 3" nails. The PFB and PFDB have dome-shaped joist nail holes that guide nails into the proper installation angle. The design also features a folded seat that raises the 2x joist very slightly above the seat radius to enable a tighter connection to the back of the hanger. For saddle hangers, PFDB and PFDSB are for solid sawn lumber carrying members, and PFDL is for LVL carrying members.

Features:

- Installation prongs make setting the hanger quick and easy
- Sizes are available for 2x8 joists

Material: PF — 18 gauge, PFB/PFDB — 20 gauge

Finish: Galvanized. Some products available in ZMAX® coating.

Installation:

- Use all specified fasteners; see General Notes.
- 0.148" x 3" purlin nails must be driven at an angle through the purlin into the header. Combine with top nails to achieve table loads.
- 0.148" x 1½" purlin nails must be driven at an angle into the purlin but do not penetrate into the header. Combine with back face fasteners and top nails to achieve table loads.

Codes: See p. 12 for Code Reference Key Chart

Web Applications: Visit **app.strongtie.com/hs** to access our Hanger Selector web application.

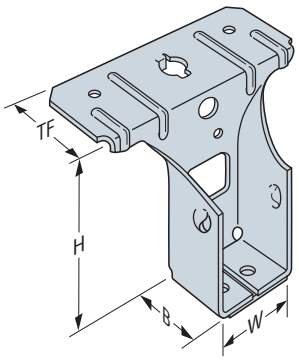

PF24B
(others similar)

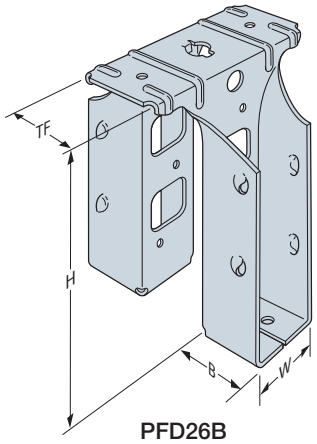

PFD26B
(others similar)

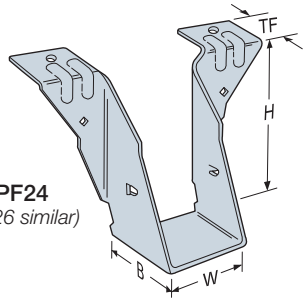

PF24
(PF26 similar)

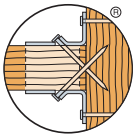

Double-Shear Nailing
(top view)

These products are available with additional corrosion protection. For more information, see pp. 13–19.

SD Many of these products are approved for installation with Strong-Drive® SD Connector screws. See pp. 380–382 for more information.

Model No.	Dimensions (in.)				Fasteners (in.)			DF/SP Allowable Loads					SPF/HF Allowable Loads					Code Ref.
	W	H	B	TF	Top	Face	Joist	Uplift (160)	Floor (100)	Snow (115)	Roof (125)	Wind (160)	Uplift (160)	Floor (100)	Snow (115)	Roof (125)	Wind (160)	
PF24	1⅜	3⅜	1½	1⅛	(2) 0.148 x 3	—	(2) 0.148 x 3	300	1,255	1,255	1,255	1,255	230	650	660	660	660	IBC, FL, LA
PF24B	1⅜	3⅜	1¼	1½	(2) 0.148 x 1½	(2) 0.148 x 1½	(2) 0.148 x 1½	345	965	965	965	965	295	785	785	785	785	
					(2) 0.148 x 3	—	(2) 0.148 x 3	375	1,005	1,005	1,005	1,005	290	680	680	680	680	
PFD24B	1⅜	3⅜	1¼	1⅜	(2) 0.148 x 1½	(4) 0.148 x 1½	(4) 0.148 x 1½	290	985	985	985	985	230	830	830	830	830	
					(2) 0.148 x 3	—	(4) 0.148 x 3	300	1,090	1,090	1,090	1,090	210	830	860	880	945	
PFDS24B	1⅜	3⅜	1¼	3⅜	(4) 0.148 x 1½	(4) 0.148 x 1½	(4) 0.148 x 1½	290	985	985	985	985	230	830	830	830	830	
					(4) 0.148 x 3	—	(4) 0.148 x 3	300	1,090	1,090	1,090	1,090	210	830	860	880	945	
PF26	1⅜	5⅜	1½	1⅛	(2) 0.148 x 3	—	(2) 0.148 x 3	300	1,255	1,255	1,255	1,255	455	805	850	880	905	
PF26B	1⅜	5⅜	1¼	1½	(2) 0.148 x 1½	(3) 0.148 x 1½	(4) 0.148 x 1½	545	1,235	1,235	1,235	1,235	470	1,005	1,005	1,005	1,005	
					(2) 0.148 x 3	—	(4) 0.148 x 3	625	1,200	1,200	1,200	1,200	480	810	810	810	810	
PFD26B	1⅜	5⅜	1¼	1⅜	(2) 0.148 x 1½	(6) 0.148 x 1½	(8) 0.148 x 1½	525	1,235	1,235	1,235	1,235	420	1,030	1,040	1,040	1,040	
					(2) 0.148 x 3	—	(8) 0.148 x 3	650	1,290	1,290	1,290	1,290	465	1,030	1,090	1,125	1,255	
PFDS26B	1⅜	5⅜	1¼	3⅜	(4) 0.148 x 1½	(6) 0.148 x 1½	(8) 0.148 x 1½	525	1,235	1,235	1,235	1,235	420	1,030	1,040	1,040	1,040	
					(4) 0.148 x 3	—	(8) 0.148 x 3	650	1,290	1,290	1,290	1,290	465	1,030	1,090	1,125	1,255	
PFDL26B	1⅜	5¼	1¼	1 13⁄16	(2) 0.148 x 1½	(6) 0.148 x 1½	(8) 0.148 x 1½	525	1,235	1,235	1,235	1,235	420	1,030	1,040	1,040	1,040	—
					(2) 0.148 x 3	—	(8) 0.148 x 3	670	1,345	1,350	1,350	1,350	465	1,030	1,090	1,125	1,255	
PF28B	1⅜	7⅛	1¼	1½	(2) 0.148 x 1½	(4) 0.148 x 1½	(6) 0.148 x 1½	675	1,335	1,335	1,335	1,335	580	1,085	1,085	1,085	1,085	
					(2) 0.148 x 3	—	(6) 0.148 x 3	850	1,580	1,650	1,650	1,650	655	1,115	1,115	1,115	1,115	
PFD28B	1⅜	7⅛	1¼	1⅜	(2) 0.148 x 1½	(8) 0.148 x 1½	(12) 0.148 x 1½	810	1,370	1,370	1,370	1,370	680	1,160	1,160	1,160	1,160	IBC, FL, LA
					(2) 0.148 x 3	—	(12) 0.148 x 3	1,050	1,580	1,680	1,745	1,975	730	1,230	1,315	1,370	1,570	
PFDS28B	1⅜	7⅛	1¼	3⅜	(4) 0.148 x 1½	(8) 0.148 x 1½	(12) 0.148 x 1½	895	1,370	1,370	1,370	1,370	730	1,160	1,160	1,160	1,160	
					(4) 0.148 x 3	—	(12) 0.148 x 3	1,050	1,580	1,680	1,745	1,975	730	1,230	1,315	1,370	1,570	
PFDL28B	1⅜	7	1¼	1 13⁄16	(2) 0.148 x 1½	(8) 0.148 x 1½	(12) 0.148 x 1½	810	1,370	1,370	1,370	1,370	680	1,160	1,160	1,160	1,160	—
					(2) 0.148 x 3	—	(12) 0.148 x 3	1,050	1,580	1,680	1,745	1,970	730	1,230	1,315	1,370	1,570	

1. Uplift loads have been increased for earthquake or wind loading with no further increase allowed. Reduce where other loads govern.
2. **Fasteners:** Nail dimensions are listed diameter by length. See pp. 25–26 for fastener information.

C-C-2026 © 2026 SIMPSON STRONG-TIE COMPANY INC.

Simpson Strong-Tie® Wood Construction Connectors

Face-Mount Hangers — I-Joists, Glulam and SCL

Web Applications:
Visit **app.strongtie.com/hs** to access our Hanger Selector web application.

Codes: See p. 12 for Code Reference Key Chart.

Actual Joist Size (in.)	Model No.	Ga.	I-Joist Compatible	Web Stiff Reqd.	Dimensions (in.) W	H	B	Min./ Max.	Fasteners (in.) Face	Joist	Allowable Loads DF/SP Species Header Uplift (160)	Floor (100)	Snow (115)	Roof (125)	SPF/HF Species Header Floor (100)	Snow (115)	Roof (125)	Code Ref.
1½ x 9½	U210	16	•	✓	1⁹⁄₁₆	7¹³⁄₁₆	2	—	(6) 0.148 x 3	(6) 0.148 x 1½	990	1,220	1,380	1,480	1,050	1,185	1,275	IBC, FL, LA
	MIU1.56/9	16	•	—	1⁹⁄₁₆	8¹⁵⁄₁₆	2½	—	(16) 0.162 x 3½	(2) 0.148 x 1½	230	2,305	2,615	2,820	1,980	2,245	2,425	
1½ x 11⅞	U210	16	•	✓	1⁹⁄₁₆	7¹³⁄₁₆	2	—	(6) 0.148 x 3	(6) 0.148 x 1½	990	1,220	1,380	1,480	1,050	1,185	1,275	
	MIU1.56/11	16	•	—	1⁹⁄₁₆	11¹⁄₁₆	2½	—	(20) 0.162 x 3½	(2) 0.148 x 1½	230	2,880	3,135	3,135	2,475	2,695	2,695	
1¾ x 5½	HU1.81/5	14		—	1 ¹³⁄₁₆	5⅜	2½	Min.	(12) 0.162 x 3½	(4) 0.148 x 1½	610	1,785	2,015	2,165	1,540	1,735	1,865	
								Max.	(16) 0.162 x 3½	(6) 0.148 x 1½	915	2,380	2,685	2,890	2,050	2,315	2,490	
1¾ x 7¼	HU7	14		—	1 ¹³⁄₁₆	6¹¹⁄₁₆	2½	Min.	(12) 0.162 x 3½	(4) 0.148 x 1½	610	1,785	2,015	2,165	1,540	1,735	1,865	
								Max.	(16) 0.162 x 3½	(8) 0.148 x 1½	1515	2,380	2,685	2,890	2,050	2,315	2,490	
1¾ x 9½	IUS1.81/9.5	18	•	—	1⅞	9½	2	—	(8) 0.148 x 3	—	70	950	1,080	1,165	815	925	1,000	
	HU9	14	•	✓	1 ¹³⁄₁₆	9⁵⁄₁₆	2½	Min.	(18) 0.162 x 3½	(6) 0.148 x 1½	915	2,680	3,020	3,250	2,305	2,605	2,800	
								Max.	(24) 0.162 x 3½	(10) 0.148 x 1½	1,795	3,570	4,030	4,335	3,075	3,470	3,735	
	HUS1.81/10	16		—	1 ¹³⁄₁₆	8⅞	3	—	(30) 0.162 x 3½	(10) 0.162 x 3½	2,635	5,515	5,830	5,830	4,360	4,675	4,885	
	HUCQ1.81/9-SDS	14		—	1 ¹³⁄₁₆	9	3	—	(8) ¼ x 1¾ SDS	(4) ¼ x 1¾ SDS	1,310	2,000	2,300	2,500	1,440	1,655	1,800	
	MIU1.81/9	16	•	—	1 ¹³⁄₁₆	8¹³⁄₁₆	2½	—	(16) 0.162 x 3½	(2) 0.148 x 1½	230	2,305	2,615	2,820	1,980	2,245	2,425	
1¾ x 11⅞	IUS1.81/11.88	18	•	—	1⅞	11⅞	2	—	(10) 0.148 x 3	—	70	1,185	1,345	1,455	1,020	1,160	1,250	
	MIU1.81/11	16	•	—	1 ¹³⁄₁₆	11¹⁄₁₆	2½	—	(20) 0.162 x 3½	(2) 0.148 x 1½	230	2,880	3,135	3,135	2,475	2,695	2,695	
	HUS1.81/10	16		—	1 ¹³⁄₁₆	8⅞	3	—	(30) 0.162 x 3½	(10) 0.162 x 3½	2,635	5,515	5,830	5,830	4,360	4,675	4,885	
	HU11	14	•	✓	1 ¹³⁄₁₆	11¹⁄₁₆	2½	Min.	(22) 0.162 x 3½	(6) 0.148 x 1½	915	3,275	3,695	3,970	2,820	3,180	3,425	
								Max.	(30) 0.162 x 3½	(10) 0.148 x 1½	1,795	4,465	4,705	4,810	3,845	4,340	4,600	
	HUCQ1.81/11-SDS	14		—	1 ¹³⁄₁₆	11	3	—	(10) ¼ x 1¾ SDS	(4) ¼ x 1¾ SDS	1,310	2,500	2,875	3,125	1,800	2,070	2,250	
1¾ x 14	IUS1.81/14	18	•	—	1⅞	14	2	Min.	(12) 0.148 x 3	—	70	1,420	1,615	1,745	1,220	1,390	1,500	
								Max.	(14) 0.148 x 3	—	70	1,660	1,805	1,805	1,425	1,550	1,550	
	MIU1.81/14	16	•	—	1 ¹³⁄₁₆	13⁵⁄₁₆	2½	—	(22) 0.162 x 3½	(2) 0.148 x 1½	230	3,170	3,595	3,875	2,725	3,090	3,335	
	HUS1.81/10	16		—	1 ¹³⁄₁₆	8⅞	3	—	(30) 0.162 x 3½	(10) 0.162 x 3½	2,635	5,515	5,830	5,830	4,360	4,675	4,885	
	U14	16	•	✓	1 ¹³⁄₁₆	10¼	2	—	(14) 0.162 x 3½	(6) 0.148 x 1½	970	2,015	2,285	2,465	1,735	1,965	2,120	
	HU14	14	•	✓	1 ¹³⁄₁₆	13¹¹⁄₁₆	2½	Min.	(28) 0.162 x 3½	(8) 0.148 x 1½	1,515	4,165	4,420	4,505	3,590	4,050	4,335	
								Max.	(36) 0.162 x 3½	(14) 0.148 x 1½	1,795	5,055	5,275	5,420	4,615	5,000	5,130	
	HUCQ1.81/11-SDS	14		—	1 ¹³⁄₁₆	11	3	—	(10) ¼ x 1¾ SDS	(4) ¼ x 1¾ SDS	1,310	2,500	2,875	3,125	1,800	2,070	2,250	
1¾ x 16	IUS1.81/16	18	•	—	1⅞	16	2	Min.	(14) 0.148 x 3	—	70	1,660	1,805	1,805	1,425	1,555	1,555	
								Max.	(16) 0.148 x 3	—	70	1,805	1,805	1,805	1,555	1,555	1,555	
	MIU1.81/16	16	•	—	1 ¹³⁄₁₆	15⁵⁄₁₆	2½	—	(24) 0.162 x 3½	(2) 0.148 x 1½	230	3,455	3,920	4,045	2,970	3,370	3,480	
1¾ x 18	MIU1.81/18	16	•	—	1 ¹³⁄₁₆	17⁵⁄₁₆	2½	—	(26) 0.162 x 3½	(2) 0.148 x 1½	230	3,745	4,020	4,045	3,220	3,460	3,480	
2 x 9½	IUS2.06/9.5	18	•	—	2⅛	9½	2	—	(8) 0.148 x 3	—	70	950	1,080	1,165	815	925	1,000	
	HU2.1/9	14	•	✓	2⅛	9³⁄₁₆	2½	—	(14) 0.162 x 3½	(6) 0.148 x 1½	915	2,085	2,350	2,530	1,795	2,025	2,180	
2 x 11⅞	IUS2.06/11.88	18	•	—	2⅛	11⅞	2	—	(10) 0.148 x 3	—	70	1,185	1,345	1,455	1,020	1,160	1,250	
	MIU2.1/11	16	•	✓	2⅛	11¹⁄₁₆	2½	—	(20) 0.162 x 3½	(2) 0.148 x 1½	230	2,880	3,135	3,135	2,475	2,695	2,695	
	HU2.1/11	14	•	✓	2⅛	11	2½	—	(16) 0.162 x 3½	(6) 0.148 x 1½	915	2,380	2,685	2,890	2,050	2,315	2,490	
2 x 14	IUS2.06/14	18	•	—	2⅛	14	2	Min.	(12) 0.148 x 3	—	70	1,420	1,615	1,745	1,220	1,390	1,500	
								Max.	(14) 0.148 x 3	—	70	1,660	1,805	1,805	1,425	1,555	1,555	
	MIU2.1/11	16	•	✓	2⅛	11¹⁄₁₆	2½	—	(20) 0.162 x 3½	(2) 0.148 x 1½	230	2,880	3,135	3,135	2,475	2,695	2,695	
	HU2.1/11	14	•	✓	2⅛	11	2½	—	(16) 0.162 x 3½	(6) 0.148 x 1½	915	2,380	2,685	2,890	2,050	2,315	2,490	
2 x 16	IUS2.06/16	18	•	—	2⅛	16	2	Min.	(14) 0.148 x 3	—	70	1,660	1,805	1,805	1,425	1,555	1,555	
								Max.	(16) 0.148 x 3	—	70	1,805	1,805	1,805	1,555	1,555	1,555	
	HU2.1/11	14	•	✓	2⅛	11	2½	—	(16) 0.162 x 3½	(6) 0.148 x 1½	915	2,380	2,685	2,890	2,050	2,315	2,490	
2⅛ x 9½	IUS2.06/9.5	18	•	—	2⅛	9½	2	—	(8) 0.148 x 3	—	70	950	1,080	1,165	815	925	1,000	
	HU2.1/9	14	•	✓	2⅛	9³⁄₁₆	2½	—	(14) 0.162 x 3½	(6) 0.148 x 1½	915	2,085	2,350	2,530	1,795	2,025	2,180	
2⅛ x 11⅞	IUS2.06/11.88	18	•	—	2⅛	11⅞	2	—	(10) 0.148 x 3	—	70	1,185	1,345	1,455	1,020	1,160	1,250	
	MIU2.1/11	16	•	✓	2⅛	11¹⁄₁₆	2½	—	(20) 0.162 x 3½	(2) 0.148 x 1½	230	2,880	3,135	3,135	2,475	2,695	2,695	
	HU2.1/11	14	•	✓	2⅛	11	2½	—	(16) 0.162 x 3½	(6) 0.148 x 1½	915	2,380	2,685	2,890	2,050	2,315	2,490	

See footnotes on p. 164.

C-C-2026 © 2026 SIMPSON STRONG-TIE COMPANY INC.

Simpson Strong-Tie® Wood Construction Connectors

Face-Mount Hangers — I-Joists, Glulam and SCL

These products are available with additional corrosion protection. For more information, see pp. 13–19.

SS For stainless-steel fasteners, see p. 25.

Codes: See p. 12 for Code Reference Key Chart.

Actual Joist Size (in.)	Model No.	Ga.	I-Joist Compatible	Web Stiff Reqd.	Dimensions (in.) W	H	B	Min./ Max.	Fasteners (in.) Face	Joist	Allowable Loads DF/SP Species Header Uplift (160)	Floor (100)	Snow (115)	Roof (125)	SPF/HF Species Header Floor (100)	Snow (115)	Roof (125)	Code Ref.
3½ x 14	IUS3.56/14	18	•	—	3⅝	14	2	Min.	(12) 0.148 x 3	—	70	1,420	1,615	1,745	1,220	1,390	1,500	IBC, FL, LA
								Max.	(14) 0.148 x 3	—	70	1,660	1,805	1,805	1,425	1,555	1,555
	MIU3.56/14	16	•		3⅜6	13⅝6	2½	—	(22) 0.162 x 3½	(2) 0.148 x 1½	210	3,170	3,595	3,875	2,725	3,090	3,335	
	U414	16	•	✓	3⅜6	10	2	—	(16) 0.162 x 3½	(6) 0.148 x 3	970	2,305	2,615	2,820	1,980	2,245	2,425	
	HHUS410	14		—	3⅝	9	3	—	(30) 0.162 x 3½	(10) 0.162 x 3½	3,565	5,635	6,380	6,445	4,845	5,486	5,545	
	HUS412	14		—	3⅜6	10½	2	—	(10) 0.162 x 3½	(10) 0.162 x 3½	3,635	2,660	3,025	3,265	2,275	2,590	2,795	
	HU414	14	•	✓	3⅜6	12⅝	2½	Max.	(24) 0.162 x 3½	(12) 0.148 x 3	1,795	3,570	4,030	4,335	3,075	3,470	3,735	
	HU416 / HUC416	14	•	✓	3⅜6	13⅝	2½	Min.	(20) 0.162 x 3½	(8) 0.148 x 3	1,515	2,975	3,360	3,610	2,565	2,895	3,110	
								Max.	(26) 0.162 x 3½	(12) 0.148 x 3	1,795	3,870	4,365	4,695	3,330	3,760	4,045	
SS	HUCQ412-SDS	14		—	3⅜6	11	3	—	(14) ¼ x 2½ SDS	(6) ¼ x 2½ SDS	2,265	5,045	5,045	5,045	3,630	3,630	3,630	
	HGUS414	12		—	3⅝	12⅞6	4	—	(66) 0.162 x 3½	(22) 0.162 x 3½	5,360	13,860	14,350	14,350	11,115	12,420	12,420	
	LGU3.63-SDS	10		—	3⅝	8 to 30	4½	—	(16) ¼ x 2½ SDS	(12) ¼ x 2½ SDS	5,555	6,720	6,720	6,720	4,840	4,840	4,840	
	MGU3.63-SDS	10		—	3⅝	9¼ to 30	4½	—	(24) ¼ x 2½ SDS	(16) ¼ x 2½ SDS	7,260	9,450	9,450	9,450	6,805	6,805	6,805	
	HGU3.63-SDS	7		—	3⅝	11 to 30	5¼	—	(36) ¼ x 2½ SDS	(24) ¼ x 2½ SDS	9,460	13,160	13,160	13,160	9,475	9,475	9,475	
3½ x 16	IUS3.56/16	18	•	—	3⅝	16	2	Min.	(14) 0.148 x 3	—	70	1,660	1,805	1,805	1,425	1,555	1,555	
								Max.	(16) 0.148 x 3	—	70	1,805	1,805	1,805	1,555	1,555	1,555	
	MIU3.56/16	16	•	—	3⅜6	15⅝6	2½	—	(24) 0.162 x 3½	(2) 0.148 x 1½	210	3,455	3,920	4,045	2,970	3,370	3,480	
	HU416 / HUC416	14	•	✓	3⅜6	13⅝	2½	Min.	(20) 0.162 x 3½	(8) 0.148 x 3	1,515	2,975	3,360	3,610	2,565	2,895	3,110	
								Max.	(26) 0.162 x 3½	(12) 0.148 x 3	1,795	3,870	4,365	4,695	3,330	3,760	4,045	
	HGUS414	12		—	3⅝	12⅞6	4	—	(66) 0.162 x 3½	(22) 0.162 x 3½	5,360	13,860	14,350	14,350	11,115	12,420	12,420	
	HUCQ412-SDS	14		—	3⅜6	11	3	—	(14) ¼ x 2½ SDS	(6) ¼ x 2½ SDS	2,265	5,045	5,045	5,045	3,630	3,630	3,630	
	LGU3.63-SDS	10		—	3⅝	8 to 30	4½	—	(16) ¼ x 2½ SDS	(12) ¼ x 2½ SDS	5,555	6,720	6,720	6,720	4,840	4,840	4,840	
	MGU3.63-SDS	10		—	3⅝	9¼ to 30	4½	—	(24) ¼ x 2½ SDS	(16) ¼ x 2½ SDS	7,260	9,450	9,450	9,450	6,805	6,805	6,805	
	HGU3.63-SDS	7		—	3⅝	11 to 30	5¼	—	(36) ¼ x 2½ SDS	(24) ¼ x 2½ SDS	9,895	14,145	14,145	14,145	10,185	10,185	10,185	
3½ x 18	MIU3.56/18	16	•	—	3⅜6	17⅝6	2½	—	(26) 0.162 x 3½	(2) 0.148 x 1½	210	3,745	4,045	4,045	3,220	3,480	3,480	
	HU416 / HUC416	14	•	✓	3⅜6	13⅝	2½	Min.	(20) 0.162 x 3½	(8) 0.148 x 3	1,515	2,975	3,360	3,610	2,565	2,895	3,110	
	HGUS414	12		—	3⅝	12⅞6	4	—	(66) 0.162 x 3½	(22) 0.162 x 3½	5,360	13,860	14,350	14,350	11,115	12,420	12,420	
SS	HUCQ412-SDS	14		—	3⅜6	11	3	—	(14) ¼ x 2½ SDS	(6) ¼ x 2½ SDS	2,265	5,045	5,045	5,045	3,630	3,630	3,630	
	LGU3.63-SDS	10		—	3⅝	8 to 30	4½	—	(16) ¼ x 2½ SDS	(12) ¼ x 2½ SDS	5,555	6,720	6,720	6,720	4,840	4,840	4,840	
	MGU3.63-SDS	10		—	3⅝	9¼ to 30	4½	—	(24) ¼ x 2½ SDS	(16) ¼ x 2½ SDS	7,260	9,450	9,450	9,450	6,805	6,805	6,805	
	HGU3.63-SDS	7		—	3⅝	11 to 30	5¼	—	(36) ¼ x 2½ SDS	(24) ¼ x 2½ SDS	9,460	13,160	13,160	13,160	9,475	9,475	9,475	
3½ x 20	MIU3.56/20	16	•	—	3⅜6	19⅝6	2½	—	(28) 0.162 x 3½	(2) 0.148 x 1½	210	4,030	4,060	4,060	3,465	3,495	3,495	
3½ x 21 to 30	MIU3.56/20	16	•	✓	3⅜6	19⅝6	2½	—	(28) 0.162 x 3½	(2) 0.148 x 1½	210	4,030	4,060	4,060	3,465	3,495	3,495	
	LGU3.63-SDS	10		—	3⅝	8 to 30	4½	—	(16) ¼ x 2½ SDS	(12) ¼ x 2½ SDS	5,555	6,720	6,720	6,720	4,840	4,840	4,840	
	MGU3.63-SDS	10		—	3⅝	9¼ to 30	4½	—	(24) ¼ x 2½ SDS	(16) ¼ x 2½ SDS	7,260	9,450	9,450	9,450	6,805	6,805	6,805	
	HGU3.63-SDS	7		—	3⅝	11 to 30	5¼	—	(36) ¼ x 2½ SDS	(24) ¼ x 2½ SDS	9,460	13,160	13,160	13,160	9,475	9,475	9,475	
4 x 9½	MIU4.12/9	16	•	—	4⅛	9⅛6	2½	—	(16) 0.162 x 3½	(2) 0.148 x 1½	210	2,305	2,615	2,820	1,980	2,245	2,425	
	HU4.12/9 / HUC4.12/9	14	•	✓	4⅛	8⅝	2½	Max.	(18) 0.162 x 3½	(10) 0.148 x 3	1,795	2,680	3,020	3,250	2,305	2,605	2,800	
4 x 11⅞	MIU4.12/11	16	•	—	4⅛	11⅛	2½	—	(20) 0.162 x 3½	(2) 0.148 x 1½	210	2,880	3,135	3,135	2,475	2,695	2,695	
	HU4.12/11 / HUC4.12/11	14	•	✓	4⅛	10⅝6	2½	Max.	(22) 0.162 x 3½	(10) 0.148 x 3	1,795	3,275	3,695	3,970	2,820	3,180	3,425	
4 x 14	MIU4.12/14	16	•	—	4⅛	13⅝6	2½	—	(22) 0.162 x 3½	(2) 0.148 x 1½	210	3,170	3,595	3,875	2,725	3,090	3,335	
	HU4.12/11 / HUC4.12/11	14	•	✓	4⅛	10⅝6	2½	Max.	(22) 0.162 x 3½	(10) 0.148 x 3	1,795	3,275	3,695	3,970	2,820	3,180	3,425	
4 x 16	MIU4.12/16	16	•	—	4⅛	15⅝6	2½	—	(24) 0.162 x 3½	(2) 0.148 x 1½	210	3,455	3,920	4,045	2,970	3,370	3,480	
	HU4.12/11 / HUC4.12/11	14	•	✓	4⅛	10⅝6	2½	Max.	(22) 0.162 x 3½	(10) 0.148 x 3	1,795	3,275	3,695	3,970	2,820	3,180	3,425	
4⅛ x 9½	MIU4.28/9	16	•	—	4⅜32	9	2½	—	(16) 0.162 x 3½	(2) 0.148 x 1½	210	2,305	2,615	2,820	1,980	2,245	2,425	
	HU4.28/9 / HUC4.28/9	14	•	✓	4⅜32	9	2½	—	(18) 0.162 x 3½	(8) 0.148 x 3	1,515	2,680	3,020	3,250	2,305	2,605	2,800	
4⅛ x 11⅞	MIU4.28/11	16	•	—	4⅜32	11⅛	2½	—	(20) 0.162 x 3½	(2) 0.148 x 1½	210	2,880	3,135	3,135	2,475	2,695	2,695	
	HU4.28/11 / HUC4.28/11	14	•	✓	4⅜32	11	2½	—	(22) 0.162 x 3½	(8) 0.148 x 3	1,515	3,275	3,695	3,970	2,820	3,180	3,425	
4⅛ x 14	MIU4.28/14	16	•	—	4⅜32	13½	2½	—	(22) 0.162 x 3½	(2) 0.148 x 1½	210	3,170	3,595	3,875	2,725	3,090	3,335	
4⅛ x 16	MIU4.28/16	16	•	—	4⅜32	15½	2½	—	(24) 0.162 x 3½	(2) 0.148 x 1½	210	3,455	3,920	4,045	2,970	3,370	3,480	

See footnotes on p. 164.

C-C-2026 © 2026 SIMPSON STRONG-TIE COMPANY INC.

Simpson Strong-Tie® Wood Construction Connectors

Top-Flange Hangers – I-Joists, Glulam and SCL

Visit **app.strongtie.com/hs** to learn more about our Hanger Selector web application.

Actual Joist Size (in.)	Model No.	Ga.	I-Joist Compatible	Web Stiff Reqd.[7]	Dimensions (in.)				Fasteners (in.)		Allowable Loads Header Type						
					W	H	B	TF	Header	Joist	Uplift (160)	LVL	PSL	LSL	DF/SP	SPF/HF	DF/SCL I-Joist[4]
1½ x 9½	BA1.56/9.5 (Min.)	12	•	—	1⁹⁄₁₆	9½	3	2½	(16) 0.162 x 3½	(2) 0.148 x 1½	255	4,015	3,705	4,005	3,205	2,660	1,495
	BA1.56/9.5 (Max.)	12	•	✓	1⁹⁄₁₆	9½	3	2½	(16) 0.162 x 3½	(8) 0.148 x 1½	1,275	4,715	4,320	4,500	4,645	4,005	1,495
	WP1.56 H=9.5	7⁄12	•	✓	1⁹⁄₁₆	5⅜ to 30	4¾	2⁹⁄₁₆	(4) 0.162 x 2½	(2) 0.148 x 1½	—	3,095	3,605	3,605	2,985	2,230	2,030
1½ x 11⅞	ITS1.56/11.88	18	•	—	1⅝	11¹³⁄₁₆	2	1⁷⁄₁₆	(6) 0.148 x 3	—	120	1,550	1,365	1,780	1,470	1,150	1,085
	BA1.56/11.88 (Min.)	12	•	—	1⁹⁄₁₆	11⅞	3	2½	(16) 0.162 x 3½	(2) 0.148 x 1½	255	4,015	3,705	4,005	3,780	3,095	1,495
	BA1.56/11.88 (Max.)	12	•	✓	1⁹⁄₁₆	11⅞	3	2½	(16) 0.162 x 3½	(8) 0.148 x 1½	1,275	4,715	4,320	4,500	4,645	4,005	1,495
	WP1.56 H=11.875	7⁄12	•	✓	1⁹⁄₁₆	5⅜ to 30	4¾	2⁹⁄₁₆	(4) 0.162 x 2½	(2) 0.148 x 1½	—	3,095	3,605	3,605	2,985	2,230	2,030
1¾ x 7¼	BA1.81/7.25 (Min.)	14	•	—	1¹³⁄₁₆	7¼	3	2½	(16) 0.162 x 3½	(2) 0.148 x 1½	255	4,015	3,705	4,005	3,205	2,660	1,495
	BA1.81/7.25 (Max.)	14	•	✓	1¹³⁄₁₆	7¼	3	2½	(16) 0.162 x 3½	(8) 0.148 x 1½	1,275	4,715	4,320	4,500	4,720	4,005	1,495
	WP1.81 H=7.25	7⁄12	•	✓	1¹³⁄₁₆	5⅜ to 30	4	2⁹⁄₁₆	(4) 0.162 x 2½	(2) 0.148 x 1½	—	3,095	3,605	3,605	2,985	2,230	2,030
1¾ x 9¼	BA1.81/9.25 (Min.)	12	•	—	1¹³⁄₁₆	9¼	3	2½	(16) 0.162 x 3½	(2) 0.148 x 1½	255	4,015	3,705	4,005	2,980	2,660	1,495
	BA1.81/9.25 (Max.)	12	•	✓	1¹³⁄₁₆	9¼	3	2½	(16) 0.162 x 3½	(8) 0.148 x 1½	1,275	4,715	4,320	4,500	4,720	4,005	1,495
	WP1.81 H=9.25	7⁄12	•	✓	1¹³⁄₁₆	5⅜ to 30	4	2⁹⁄₁₆	(4) 0.162 x 2½	(2) 0.148 x 1½	—	3,095	3,605	3,605	2,985	2,230	2,030
1¾ x 9½	ITS1.81/9.5	18	•	—	1⅞	9⁷⁄₁₆	2	1⁷⁄₁₆	(6) 0.148 x 3	—	120	1,550	1,365	1,780	1,470	1,150	1,085
	MIT9.5	16	•	—	1¹³⁄₁₆	9½	2½	2⁹⁄₁₆	(8) 0.162 x 3½	(2) 0.148 x 1½	215	2,550	2,140	2,115	2,575	1,665	1,230
	BA1.81/9.5 (Min.)	14	•	—	1¹³⁄₁₆	9½	3	2½	(16) 0.162 x 3½	(2) 0.148 x 1½	255	4,015	3,705	4,005	3,205	2,660	1,495
	BA1.81/9.5 (Max.)	14	•	✓	1¹³⁄₁₆	9½	3	2½	(16) 0.162 x 3½	(8) 0.148 x 1½	1,275	4,715	4,320	4,500	4,720	4,005	1,495
	WP1.81 H=9.5	7⁄12	•	✓	1¹³⁄₁₆	5⅜ to 30	4	2⁹⁄₁₆	(4) 0.162 x 2½	(2) 0.148 x 1½	—	3,095	3,605	3,605	2,985	2,230	2,030
1¾ x 11¼	BA1.81/11.25 (Min.)	12	•	—	1¹³⁄₁₆	11¼	3	2½	(16) 0.162 x 3½	(2) 0.148 x 1½	255	4,015	3,705	4,005	3,780	3,095	1,495
	BA1.81/11.25 (Max.)	12	•	✓	1¹³⁄₁₆	11¼	3	2½	(16) 0.162 x 3½	(8) 0.148 x 1½	1,275	4,715	4,320	4,500	4,720	4,005	1,495
	WP1.81 H=11.25	7⁄12	•	✓	1¹³⁄₁₆	5⅜ to 30	4	2⁹⁄₁₆	(4) 0.162 x 2½	(2) 0.148 x 1½	—	3,095	3,605	3,605	2,985	2,230	2,030
1¾ x 11⅞	ITS1.81/11.88	18	•	—	1⅞	11¹³⁄₁₆	2	1⁷⁄₁₆	(6) 0.148 x 3	—	120	1,550	1,365	1,780	1,470	1,150	1,085
	MIT11.88	16	•	—	1¹³⁄₁₆	11⅞	2½	2⁹⁄₁₆	(8) 0.162 x 3½	(2) 0.148 x 1½	215	2,550	2,140	2,115	2,575	1,665	1,230
	BA1.81/11.88 (Min.)	14	•	—	1¹³⁄₁₆	11⅞	3	2½	(16) 0.162 x 3½	(2) 0.148 x 1½	255	4,015	3,705	4,005	3,780	3,095	1,495
	BA1.81/11.88 (Max.)	14	•	✓	1¹³⁄₁₆	11⅞	3	2½	(16) 0.162 x 3½	(8) 0.148 x 1½	1,275	4,715	4,320	4,500	4,720	4,005	1,495
	WP1.81 H=11.875	7⁄12	•	✓	1¹³⁄₁₆	5⅜ to 30	4	2⁹⁄₁₆	(4) 0.162 x 2½	(2) 0.148 x 1½	—	3,095	3,605	3,605	2,985	2,230	2,030
1¾ x 14	ITS1.81/14	18	•	—	1⅞	13¹⁵⁄₁₆	2	1⁷⁄₁₆	(6) 0.148 x 3	—	120	1,550	1,365	1,780	1,470	1,150	1,085
	MIT1.81/14	16	•	—	1¹³⁄₁₆	14	2½	2⁹⁄₁₆	(8) 0.162 x 3½	(2) 0.148 x 1½	215	2,550	2,140	2,115	2,575	1,665	1,230
	BA1.81/14 (Min.)	14	•	—	1¹³⁄₁₆	14	3	2½	(16) 0.162 x 3½	(2) 0.148 x 1½	255	4,015	3,705	4,005	3,780	3,095	1,495
	BA1.81/14 (Max.)	14	•	✓	1¹³⁄₁₆	14	3	2½	(16) 0.162 x 3½	(8) 0.148 x 1½	1,275	4,715	4,320	4,500	4,720	4,005	1,495
	WP1.81 H=14	7⁄12	•	✓	1¹³⁄₁₆	5⅜ to 30	4	2⁹⁄₁₆	(4) 0.162 x 2½	(2) 0.148 x 1½	—	3,095	3,605	3,605	2,985	2,230	2,030
1¾ x 16	ITS1.81/16	18	•	—	1⅞	15¹⁵⁄₁₆	2	1⁷⁄₁₆	(6) 0.148 x 3	—	120	1,550	1,365	1,780	1,470	1,150	1,085
	MIT1.81/16	16	•	—	1¹³⁄₁₆	16	2½	2⁹⁄₁₆	(8) 0.162 x 3½	(2) 0.148 x 1½	215	2,550	2,140	2,115	2,575	1,665	1,230
	BA1.81/16 (Min.)	14	•	—	1¹³⁄₁₆	16	3	2½	(16) 0.162 x 3½	(2) 0.148 x 1½	255	4,015	3,705	4,005	3,780	3,095	1,495
	BA1.81/16 (Max.)	14	•	✓	1¹³⁄₁₆	16	3	2½	(16) 0.162 x 3½	(8) 0.148 x 1½	1,275	4,715	4,320	4,500	4,720	4,005	1,495
	WP1.81 H=16	7⁄12	•	✓	1¹³⁄₁₆	5⅜ to 30	4	2⁹⁄₁₆	(4) 0.162 x 2½	(2) 0.148 x 1½	—	3,095	3,605	3,605	2,985	2,230	2,030
2 x 9½	ITS2.06/9.5	18	•	—	2⅛	9⁷⁄₁₆	2	1⁷⁄₁₆	(6) 0.148 x 3	—	120	1,550	1,365	1,780	1,470	1,150	1,085
	BA2.1/9.5 (Min.)	12	•	—	2⅛	9½	3	2½	(16) 0.162 x 3½	(2) 0.148 x 1½	255	4,015	3,705	4,005	2,980	2,660	1,495
	BA2.1/9.5 (Max.)	12	•	✓	2⅛	9½	3	2½	(16) 0.162 x 3½	(8) 0.148 x 1½	1,275	4,715	4,320	4,500	4,720	4,005	1,495
	WP2.1 H=9.5	7⁄12	•	✓	2⅛	5⅜ to 30	2½	2⁹⁄₁₆	(4) 0.162 x 2½	(2) 0.148 x 1½	—	3,095	3,605	3,605	2,985	2,230	2,030
2 x 11⅞	ITS2.06/11.88	18	•	—	2⅛	11¹³⁄₁₆	2	1⁷⁄₁₆	(6) 0.148 x 3	—	120	1,550	1,365	1,780	1,470	1,150	1,085
	MIT2.1/11.88	16	•	—	2⅛	11⅞	2½	2⁹⁄₁₆	(8) 0.162 x 3½	(2) 0.148 x 1½	215	2,550	2,140	2,115	2,575	1,665	1,230
	BA2.1/11.88 (Min.)	14	•	—	2⅛	11⅞	3	2½	(16) 0.162 x 3½	(2) 0.148 x 1½	255	4,015	3,705	4,005	3,780	3,095	1,495
	BA2.1/11.88 (Max.)	14	•	✓	2⅛	11⅞	3	2½	(16) 0.162 x 3½	(8) 0.148 x 1½	1,275	4,715	4,320	4,500	4,720	4,005	1,495
	WP2.1 H=11.875	7⁄12	•	✓	2⅛	5⅜ to 30	2½	2⁹⁄₁₆	(4) 0.162 x 2½	(2) 0.148 x 1½	—	3,095	3,605	3,605	2.985	2,230	2,030
2 x 14	ITS2.06/14	18	•	—	2⅛	13¹⁵⁄₁₆	2	1⁷⁄₁₆	(6) 0.148 x 3	—	120	1,550	1,365	1,780	1,470	1,150	1,085
	BA2.1/14 (Min.)	12	•	—	2⅛	14	3	2½	(16) 0.162 x 3½	(2) 0.148 x 1½	255	4,015	3,705	4,005	3,780	3,095	1,495
	BA2.1/14 (Max.)	12	•	✓	2⅛	14	3	2½	(16) 0.162 x 3½	(8) 0.148 x 1½	1,275	4,715	4,320	4,500	4,720	4,005	1,495
	WP2.1 H=14	7⁄12	•	✓	2⅛	5⅜ to 30	2½	2⁹⁄₁₆	(4) 0.162 x 2½	(2) 0.148 x 1½	—	3,095	3,605	3,605	2,985	2,230	2,030

See footnotes on p. 206.

C-C-2026 © 2026 SIMPSON STRONG-TIE COMPANY INC.

Simpson Strong-Tie® Wood Construction Connectors

Top-Flange Hangers – I-Joists, Glulam and SCL

Actual Joist Size (in.)	Model No.	Ga.	I-Joist Compatible	Web Stiff Reqd.[7]	Dimensions (in.)				Fasteners (in.)		Allowable Loads Header Type						
					W	H	B	TF	Header	Joist	Uplift (160)	LVL	PSL	LSL	DF/SP	SPF/HF	DF/SCL I-Joist[4]
3½ x 11⅞	ITS3.56/11.88	18	•	—	3⅝	11 13/16	2	1⅞	(6) 0.148 x 3	—	120	1,550	1,365	1,780	1,470	1,150	1,085
	MIT411.88	16	•	—	3⅜	11⅞	2½	2⅝	(8) 0.162 x 3½	(2) 0.148 x 1½	—	1,675	1,675	1,675	1,675	1,665	1,230
			•	✓							215	2,550	2,140	2,115	2,575	1,665	1,230
	BA3.56/11.88 (Min.)	14	•	—	3⅜	11⅞	3	2½	(16) 0.162 x 3½	(2) 0.148 x 1½	255	4,015	3,705	4,005	3,780	3,095	1,495
	BA3.56/11.88 (Max.)	14	•	✓	3⅜	11⅞	3	2½	(16) 0.162 x 3½	(8) 0.148 x 1½	1,275	4,715	4,320	4,500	4,720	4,005	1,495
	HB3.56/11.88	10	•	✓	3⅜	11⅞	3½	3	(22) 0.162 x 3½	(10) 0.162 x 3½	2,075	5,815	5,640	6,395	5,395	3,820	—
	WP3.56 H=11.875	7/12	•	✓	3⅜	5⅜ to 30	2½	2⅜	(4) 0.162 x 2½	(2) 0.148 x 1½	—	3,095	3,605	3,605	2,985	2,230	2,030
	HWP3.56 H=11.875	7/12	•	✓	3⅜	6 to 28	3	2½	(9) 0.162 x 3½	(10) 0.148 x 1½	1,535	3,995	4,500	4,350	3,955	3,955	—
	HWPH3.56 H=11.875	3/7	•	✓	3⅜	6 to 32	3¼	2½	(12) 0.162 x 3½	(10) 0.148 x 1½	1,685	6,595	7,025	5,450	5,920	4,740	—
	HGLT4 H=11.875	3/7		—	3⅜	7½ to 33	6	2½	(18) N54A	(6) N54A	2,450	—	—	—	10,720	—	—
	HGLTV3.511	3/7	•	✓	3⅜	11⅞	6	3	(18) 0.162 x 3½	(6) 0.162 x 3½	1,120	10,585	9,485	9,500	7,805	6,770	—
3½ x 14	ITS3.56/14	18	•	—	3⅝	13 15/16	2	1⅞	(6) 0.148 x 3	—	120	1,550	1,365	1,780	1,470	1,150	1,085
	MIT414	16	•	—	3⅜	14	2½	2⅝	(8) 0.162 x 3½	(2) 0.148 x 1½	—	1,675	1,675	1,675	1,675	1,665	1,230
			•	✓							215	2,550	2,140	2,115	2,575	1,665	1,230
	BA3.56/14 (Min.)	14	•	—	3⅜	14	3	2½	(16) 0.162 x 3½	(2) 0.148 x 1½	255	4,015	3,705	4,005	3,780	3,095	1,495
	BA3.56/14 (Max.)	14	•	✓	3⅜	14	3	2½	(16) 0.162 x 3½	(8) 0.148 x 1½	1,275	4,715	4,320	4,500	4,720	4,005	1,495
	HB3.56/14	10	•	✓	3⅜	14	3½	3	(22) 0.162 x 3½	(10) 0.162 x 3½	2,075	5,815	5,640	6,395	5,395	3,820	—
	WP3.56 H=14	7/12	•	✓	3⅜	5⅜ to 30	2½	2⅜	(4) 0.162 x 2½	(2) 0.148 x 1½	—	3,095	3,605	3,605	2,985	2,230	2,030
	HWP3.56 H=14	7/12	•	✓	3⅜	6 to 28	3	2½	(9) 0.162 x 3½	(10) 0.148 x 1½	1,535	3,995	4,500	4,350	3,955	3,955	—
	HWPH3.56 H=14	3/7	•	✓	3⅜	6 to 32	3¼	2½	(12) 0.162 x 3½	(10) 0.148 x 1½	1,685	6,595	7,025	5,450	5,920	4,740	—
	HGLT4 H=14	3/7		—	3⅜	7½ to 33	6	2½	(18) N54A	(6) N54A	2,450	—	—	—	10,720	—	—
	HGLTV3.514	3/7	•	✓	3⅜	14	6	3	(18) 0.162 x 3½	(6) 0.162 x 3½	1,120	10,585	9,485	9,500	7,805	6,770	—
3½ x 16	ITS3.56/16	18	•	—	3⅝	15 15/16	2	1⅞	(6) 0.148 x 3	—	120	1,550	1,365	1,780	1,470	1,150	1,085
	MIT416	16	•	—	3⅜	16	2½	2⅝	(8) 0.162 x 3½	(2) 0.148 x 1½	—	1,675	1,675	1,675	1,675	1,665	1,230
			•	✓							215	2,550	2,140	2,115	2,575	1,665	1,230
	BA3.56/16 (Min.)	14	•	—	3⅜	16	3	2½	(16) 0.162 x 3½	(2) 0.148 x 1½	255	4,015	3,705	4,005	3,780	3,095	1,495
	BA3.56/16 (Max.)	14	•	✓	3⅜	16	3	2½	(16) 0.162 x 3½	(8) 0.148 x 1½	1,275	4,715	4,320	4,500	4,720	4,005	1,495
	HB3.56/16	10	•	✓	3⅜	16	3½	3	(22) 0.162 x 3½	(10) 0.162 x 3½	2,075	5,815	5,640	6,395	5,395	3,820	—
	WP3.56 H=16	7/12	•	✓	3⅜	5⅜ to 30	2½	2⅜	(4) 0.162 x 2½	(2) 0.148 x 1½	—	3,095	3,605	3,605	2,985	2,230	2,030
	HWP3.56 H=16	7/12	•	✓	3⅜	6 to 28	3	2½	(9) 0.162 x 3½	(12) 0.148 x 1½	1,560	3,995	4,500	4,350	3,955	3,955	—
	HWPH3.56 H=16	3/7	•	✓	3⅜	6 to 32	3¼	2½	(12) 0.162 x 3½	(12) 0.148 x 1½	2,075	6,595	7,025	5,450	5,920	4,740	—
	HGLT4 H=16	3/7		—	3⅜	7½ to 33	6	2½	(18) N54A	(6) N54A	2,450	—	—	—	10,720	—	—
	HGLTV3.516	3/7	•	✓	3⅜	16	6	3	(18) 0.162 x 3½	(6) 0.162 x 3½	1,120	10,585	9,485	9,500	7,805	6,770	—
3½ x 18	MIT418	16	•	—	3⅜	18	2½	2⅝	(8) 0.162 x 3½	(2) 0.148 x 1½	—	1,675	1,675	1,675	1,675	1,665	1,230
			•	✓							215	2,550	2,140	2,115	2,575	1,665	1,230
	HIT418	16	•	—	3⅜	18	3	2⅜	(10) 0.162 x 3½	(2) 0.148 x 1½	305	2,550	2,220	2,500	2,875	1,950	—
	BA3.56/18 (Min.)	14	•	—	3⅜	18	3	2½	(16) 0.162 x 3½	(2) 0.148 x 1½	255	4,015	3,705	4,005	3,780	3,095	1,495
	BA3.56/18 (Max.)	14	•	✓	3⅜	18	3	2½	(16) 0.162 x 3½	(8) 0.148 x 1½	1,275	4,715	4,320	4,500	4,720	4,005	1,495
	HB3.56/18	10	•	✓	3⅜	18	3½	3	(22) 0.162 x 3½	(10) 0.162 x 3½	2,075	5,815	5,640	6,395	5,395	3,820	—
	WP3.56 H=18	7/12	•	✓	3⅜	5⅜ to 30	2½	2⅜	(4) 0.162 x 2½	(2) 0.148 x 1½	—	3,095	3,605	3,605	2,985	2,230	2,030
	HWP3.56 H=18	7/12	•	✓	3⅜	6 to 28	3	2½	(9) 0.162 x 3½	(12) 0.148 x 1½	1,560	3,995	4,500	4,350	3,955	3,955	—
	HWPH3.56 H=18	3/7	•	✓	3⅜	6 to 32	3¼	2½	(12) 0.162 x 3½	(12) 0.148 x 1½	2,075	6,595	7,025	5,450	5,920	4,740	—
	HGLT4 H=18	3/7		—	3⅜	7½ to 33	6	2½	(18) N54A	(6) N54A	2,450	—	—	—	10,720	—	—
	HGLTV3.518	3/7	•	✓	3⅜	18	6	3	(18) 0.162 x 3½	(6) 0.162 x 3½	1,120	10,585	9,485	9,500	7,805	6,770	—
3½ x 20	MIT420	16	•	—	3⅜	20	2½	2⅝	(8) 0.162 x 3½	(2) 0.148 x 1½	—	1,675	1,675	1,675	1,675	1,665	1,230
			•	✓							215	2,550	2,140	2,115	2,575	1,665	1,230
	HIT420	16	•	—	3⅜	20	3	2⅜	(10) 0.162 x 3½	(2) 0.148 x 1½	305	2,550	2,220	2,500	2,875	1,950	—
	BA3.56/20 (Min.)	12	•	—	3⅜	20	3	2½	(16) 0.162 x 3½	(2) 0.148 x 1½	255	4,015	3,705	4,005	3,780	3,095	1,495
	BA3.56/20 (Max.)	12	•	✓	3⅜	20	3	2½	(16) 0.162 x 3½	(8) 0.148 x 1½	1,275	4,715	4,320	4,500	4,720	4,005	1,495
	HB3.56/20	10	•	✓	3⅜	20	3½	3	(22) 0.162 x 3½	(10) 0.162 x 3½	2,075	5,815	5,640	6,395	5,395	3,820	—
	WP3.56 H=20	7/12	•	✓	3⅜	5⅜ to 30	2½	2⅜	(4) 0.162 x 2½	(2) 0.148 x 1½	—	3,095	3,605	3,605	2,985	2,230	2,030
	HWP3.56 H=20	7/12	•	✓	3⅜	6 to 28	3	2½	(9) 0.162 x 3½	(12) 0.148 x 1½	1,560	3,995	4,500	4,350	3,955	3,955	—
	HWPH3.56 H=20	3/7	•	✓	3⅜	6 to 32	3¼	2½	(12) 0.162 x 3½	(12) 0.148 x 1½	2,075	6,595	7,025	5,450	5,920	4,740	—
	HGLTV4 H=20	3/7	•	✓	3⅜	7½ to 33	6	3	(18) 0.162 x 3½	(6) 0.162 x 3½	1,120	10,585	9,485	9,500	7,805	6,770	—

See footnotes on p. 206.

C-C-2026 © 2026 SIMPSON STRONG-TIE COMPANY INC.

Simpson Strong-Tie® Wood Construction Connectors

Top-Flange Hangers – I-Joists, Glulam and SCL

Actual Joist Size (in.)	Model No.	Ga.	I-Joist Compatible	Web Stiff Reqd.[7]	Dimensions (in.)				Fasteners (in.)		Allowable Loads Header Type						
					W	H	B	TF	Header	Joist	Uplift (160)	LVL	PSL	LSL	DF/SP	SPF/HF	DF/SCL I-Joist[4]
5¼ x 9¼	HB5.50/9.25	10		✓	5½	9¼	3½	3	(22) 0.162 x 3½	(10) 0.162 x 3½	2,075	5,815	5,640	6,395	5,395	3,820	—
	HWP5.37 H=9.25	7/12		✓	5⅜	6 to 28	3	2½	(9) 0.162 x 3½	(10) 0.148 x 1½	1,560	3,995	4,500	4,350	3,955	3,955	—
	HWPH5.37 H=9.25	3/7		✓	5⅜	6 to 32	3¼	2½	(12) 0.162 x 3½	(10) 0.148 x 1½	1,685	6,595	7,025	5,450	5,920	4,740	—
	HGLTV5.37 H=9.25	3/7		—	5⅜	7½ to 32½	6	3	(18) 0.162 x 3½	(6) 0.162 x 3½	1,120	10,585	9,485	9,500	7,805	6,770	—
5¼ x 9½	HB5.50/9.5	10		✓	5½	9½	3½	3	(22) 0.162 x 3½	(10) 0.162 x 3½	2,075	5,815	5,640	6,395	5,395	3,820	—
	HWP5.37 H=9.5	7/12		✓	5⅜	6 to 28	3	2½	(9) 0.162 x 3½	(10) 0.148 x 1½	1,560	3,995	4,500	4,350	3,955	3,955	—
	HWPH5.37 H=9.5	3/7		✓	5⅜	6 to 32	3¼	2½	(12) 0.162 x 3½	(10) 0.148 x 1½	1,685	6,595	7,025	5,450	5,920	4,740	—
	HGLTV5.37 H=9.5	3/7		✓	5⅜	7½ to 32½	6	3	(18) 0.162 x 3½	(6) 0.162 x 3½	1,120	10,585	9,485	9,500	7,805	6,770	—
5¼ x 11¼	HB5.50/11.25	10		✓	5½	11¼	3½	3	(22) 0.162 x 3½	(10) 0.162 x 3½	2,075	5,815	5,640	6,395	5,395	3,820	—
	HWP5.37 H=11.25	7/12		✓	5⅜	6 to 28	3	2½	(9) 0.162 x 3½	(10) 0.148 x 1½	1,560	3,995	4,500	4,350	3,955	3,955	—
	HWPH5.37 H=11.25	3/7		✓	5⅜	6 to 32	3¼	2½	(12) 0.162 x 3½	(10) 0.148 x 1½	1,685	6,595	7,025	5,450	5,920	4,740	—
	HGLTV5.37 H=11.25	3/7		✓	5⅜	7½ to 32½	6	3	(18) 0.162 x 3½	(6) 0.162 x 3½	1,120	10,585	9,485	9,500	7,805	6,770	—
5¼ x 11⅞	HB5.50/11.88	10		✓	5½	11⅞	3½	3	(22) 0.162 x 3½	(10) 0.162 x 3½	2,075	5,815	5,640	6,395	5,395	3,820	—
	HWP5.37 H=11.875	7/12		✓	5⅜	6 to 28	3	2½	(9) 0.162 x 3½	(10) 0.148 x 1½	1,560	3,995	4,500	4,350	3,955	3,955	—
	HWPH5.37 H=11.875	3/7		✓	5⅜	6 to 32	3¼	2½	(12) 0.162 x 3½	(10) 0.148 x 1½	1,685	6,595	7,025	5,450	5,920	4,740	—
	HGLTV5.37 H=11.875	3/7		✓	5⅜	7½ to 32½	6	3	(18) 0.162 x 3½	(6) 0.162 x 3½	1,120	10,585	9,485	9,500	7,805	6,770	—
	EGQ5.37-SDS H=11.875	3/7		—	5⅜	11¼ to 32	6	3	(28) ¼ x 3 SDS	(12) ¼ x 3 SDS	7,670	19,800	18,680	19,800	17,085	12,915	—
5¼ x 14	HB5.50/14	10		✓	5½	14	3½	3	(22) 0.162 x 3½	(10) 0.162 x 3½	2,075	5,815	5,640	6,395	5,395	3,820	—
	HWP5.37 H=14	7/12		✓	5⅜	6 to 28	3	2½	(9) 0.162 x 3½	(10) 0.148 x 1½	1,535	3,995	4,500	4,350	3,955	3,955	—
	HWPH5.37 H=14	3/7		✓	5⅜	6 to 32	3¼	2½	(12) 0.162 x 3½	(10) 0.148 x 1½	1,685	6,595	7,025	5,450	5,920	4,740	—
	HGLTV5.37 H=14	3/7		✓	5⅜	7½ to 32½	6	3	(18) 0.162 x 3½	(6) 0.162 x 3½	1,120	10,585	9,485	9,500	7,805	6,770	—
	EGQ5.37-SDS H=14	3/7		—	5⅜	11¼ to 32	6	3	(28) ¼ x 3 SDS	(12) ¼ x 3 SDS	7,670	19,800	18,680	19,800	17,085	12,915	—
5¼ x 16	HB5.50/16	10		✓	5½	16	3½	3	(22) 0.162 x 3½	(10) 0.162 x 3½	2,075	5,815	5,640	6,395	5,395	3,820	—
	HWP5.37 H=16	7/12		✓	5⅜	6 to 28	3	2½	(9) 0.162 x 3½	(12) 0.148 x 1½	1,560	3,995	4,500	4,350	3,955	3,955	—
	HWPH5.37 H=16	3/7		✓	5⅜	6 to 32	3¼	2½	(12) 0.162 x 3½	(12) 0.148 x 1½	2,075	6,595	7,025	5,450	5,920	4,740	—
	HGLTV5.37 H=16	3/7		✓	5⅜	7½ to 32½	6	3	(18) 0.162 x 3½	(6) 0.162 x 3½	1,120	10,585	9,485	9,500	7,805	6,770	—
	EGQ5.37-SDS H=16	3/7		—	5⅜	11¼ to 32	6	3	(28) ¼ x 3 SDS	(12) ¼ x 3 SDS	7,670	19,800	18,680	19,800	17,085	12,915	—
5¼ x 18	HB5.50/18	10		✓	5½	18	3½	3	(22) 0.162 x 3½	(10) 0.162 x 3½	2,075	5,815	5,640	6,395	5,395	3,820	—
	HWPH5.37 H=18	3/7		✓	5⅜	6 to 32	3¼	2½	(12) 0.162 x 3½	(12) 0.148 x 1½	2,075	6,595	7,025	5,450	5,920	4,740	—
	HGLTV5.37 H=18	3/7		✓	5⅜	7½ to 32½	6	3	(18) 0.162 x 3½	(6) 0.162 x 3½	1,120	10,585	9,485	9,500	7,805	6,770	—
	EGQ5.37-SDS H=18	3/7		—	5⅜	11¼ to 32	6	3	(28) ¼ x 3 SDS	(12) ¼ x 3 SDS	7,670	19,800	18,680	19,800	17,085	12,915	—
5¼ x 20	HB5.50/20	10		✓	5½	20	3½	3	(22) 0.162 x 3½	(10) 0.162 x 3½	2,075	5,815	5,640	6,395	5,395	3,820	—
	HWPH5.37 H=20	3/7		✓	5⅜	6 to 32	3¼	2½	(12) 0.162 x 3½	(12) 0.148 x 1½	2,075	6,595	7,025	5,450	5,920	4,740	—
	HGLTV5.37 H=20	3/7		✓	5⅜	7½ to 32½	6	3	(18) 0.162 x 3½	(6) 0.162 x 3½	1,120	10,585	9,485	9,500	7,805	6,770	—
	EGQ5.37-SDS H=20	3/7		—	5⅜	11¼ to 32	6	3	(28) ¼ x 3 SDS	(12) ¼ x 3 SDS	7,670	19,800	18,680	19,800	17,085	12,915	—
5¼ x 22	HWPH5.37 H=22	3/7		✓	5⅜	6 to 32	3¼	2½	(12) 0.162 x 3½	(12) 0.148 x 1½	2,075	6,595	7,025	5,450	5,920	4,740	—
	HGLTV5.37X H=22	3/7		✓	5⅜	7½ to 32½	6	3	(18) 0.162 x 3½	(6) 0.162 x 3½	1,120	10,585	9,485	9,500	7,805	6,770	—
	EGQ5.37-SDS H=22	3/7		—	5⅜	4 to 30	6	3	(28) ¼ x 3 SDS	(12) ¼ x 3 SDS	7,670	19,800	18,680	19,800	17,085	12,915	—
5¼ x 24	HWPH5.37 H=24	3/7		✓	5⅜	6 to 32	3¼	2½	(12) 0.162 x 3½	(12) 0.148 x 1½	2,075	6,595	7,025	5,450	5,920	4,740	—
	HGLTV5.37X H=24	3/7		✓	5⅜	7½ to 32½	6	3	(18) 0.162 x 3½	(6) 0.162 x 3½	1,120	10,585	9,485	9,500	7,805	6,770	—
	EGQ5.37-SDS H=24	3/7		—	5⅜	11¼ to 32	6	3	(28) ¼ x 3 SDS	(12) ¼ x 3 SDS	7,670	19,800	18,680	19,800	17,085	12,915	—
	HB5.50X	10		✓	5½	8 to 33	3½	3	(22) 0.162 x 3½	(10) 0.162 x 3½	2,075	5,815	5,640	6,395	5,395	3,820	—
	HWP5.62	7/12		✓	5⅝	6 to 28	3	2½	(9) 0.162 x 3½	(12) 0.148 x 1½	1,560	3,995	4,500	4,350	3,955	3,955	—
5½ LAM	HWPH5.62	3/7		✓	5⅝	6 to 28	3¼	2½	(12) 0.162 x 3½	(12) 0.148 x 1½	2,075	6,595	7,025	5,450	5,920	4,740	—
	HGLTV6	3/7		✓	59/16	7½ to 32	6	3	(18) 0.162 x 3½	(6) 0.162 x 3½	1,120	10,585	9,485	9,500	7,805	6,770	—
	HGLT6	3/7		—	59/16	7½ to 32	6	2½	(18) N54A	(6) N54A	2,450	—	—	—	10,720	—	—
	EGQ5.62-SDS	3/7		—	5⅝	11¼ to 32	6	3	(28) ¼ x 3 SDS	(12) ¼ x 3 SDS	7,670	19,800	18,680	19,800	17,085	12,915	—
6¾ LAM	HB6.88X	10	•	✓	6⅞	8 to 33	3½	3	(22) 0.162 x 3½	(10) 0.162 x 3½	2,075	5,815	5,640	6,395	5,395	3,820	—
	HWPH6.88	3/7	•	✓	6⅞	6 to 28	3¼	2½	(12) 0.162 x 3½	(12) 0.148 x 1½	2,075	6,595	7,025	5,450	5,920	4,740	—
	HGLTV7	3/7	•	✓	6⅞	7½ to 31½	6	3	(18) 0.162 x 3½	(6) 0.162 x 3½	1,120	10,585	9,485	9,500	7,805	6,770	—
	HGLT7	3/7		—	6⅞	7½ to 32	6	2½	(18) N54A	(6) N54A	2,450	—	—	—	10,720	—	—
	HGLS7	3/7		—	6⅞	7½ to 32½	6	SPEC	(28) N54A	(16) N54A	2,265	—	—	—	13,850	—	—
	EGQ6.88-SDS	3/7		—	6⅞	11¼ to 32	6	3	(28) ¼ x 3 SDS	(12) ¼ x 3 SDS	7,670	19,800	18,680	19,800	17,085	12,915	—

See footnotes on p. 206.

C-C-2026 © 2026 SIMPSON STRONG-TIE COMPANY INC.

HL

Heavy Angle and Gusset

Versatile angle gussets and heavy angles promote standardization and construction economy, and are compatible with Simpson Strong-Tie structural hardware.

Finish: 7 gauge models — galvanized;
3 gauge models — Simpson Strong-Tie gray paint.
May be ordered HDG or black powder coat (add HDG or PC to model no.).

Options:

- Gussets may be added to HL models when L ≥ 5" (specify G after model number, as in HL46G).

Codes: See p. 12 for Code Reference Key Chart

These products are available with additional corrosion protection. For more information, see pp. 13–19.

Model No.	Ga.	Dimensions (in.)						Bolts (Total)		DF/SP Allowable Loads		Code Ref.
		W_1 and W_2	L	D_1	D_2	D_3	D_4	Qty.	Dia.	Uplift (160)	F_1 (160)	
Single Row Angles												
HL33	7	3¼	2½	1¼	—	2	—	2	½	740	1,040	
HL35	7	3¼	5	1¼	2½	2	—	4	½	740	1,310	
HL37	7	3¼	7½	1¼	2½	2	—	6	½	740	1,310	
HL43	3	4¼	3	1½	—	2¾	—	2	¾	1,275	1,445	—
HL46	3	4¼	6	1½	3	2¾	—	4	¾	1,275	1,680	
HL49	3	4¼	9	1½	3	2¾	—	6	¾	1,275	1,680	
Double Row Angles												
HL53	7	5¾	2½	1¼	—	2	2½	4	½	740	1,310	
HL55	7	5¾	5	1¼	2½	2	2½	8	½	740	1,310	
HL57	7	5¾	7½	1¼	2½	2	2½	12	½	740	1,310	—
HL73	3	7¼	3	1½	—	2¾	3	4	¾	2,445	2,885	
HL76	3	7¼	6	1½	3	2¾	3	8	¾	2,445	4,310	
HL79	3	7¼	9	1½	3	2¾	3	12	¾	2,445	4,310	

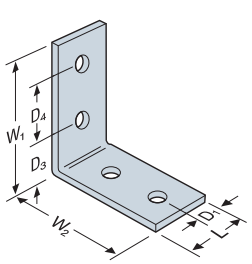

HL53

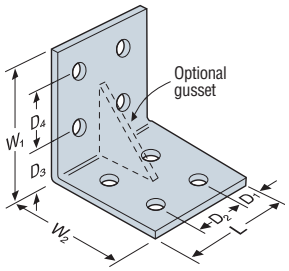

HL55

1. See pp. 288–289 for Straps and Ties General Notes.
2. For SPF/HF lumber, use 0.85 x DF/SP allowable loads.
3. Parts should be centered on the face of the member, which is at least as wide as the angle, to which they are attached.
4. Wood members for the "3" and "5" series must have a minimum thickness of 3½" for table loads to apply.
5. Wood members for the "4" and "7" series must have a minimum thickness of 5⅛" for table loads to apply.
6. Allowable loads are for a single connector. Uplift loads may be doubled when using two connectors. Connectors are required on both sides to achieve lateral loads in both directions. Lateral loads may not be doubled.
7. Lag screws of equal diameter (minimum 5" long) may be substituted for bolts in the beam with no reduction in load.
8. All references to bolts are for structural-quality through bolts (not lag screws or carriage bolts) equal to or better than ASTM A307, Grade A.

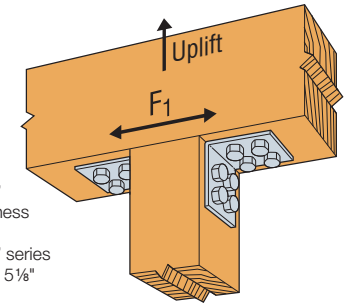

Typical HL55 Installation

Z

Clip

The Z clip secures 2x4 flat blocking between joists or trusses to support sheathing.

Material: See table

Finish: Galvanized

Installation:

- Use all specified fasteners; see General Notes.
- Z clips do not provide lateral stability. Do not walk on stiffeners or apply load until diaphragm is installed and nailed to stiffeners.

Codes: See p. 12 for Code Reference Key Chart

Model No.	Ga.	Dimensions (in.)				Fasteners[1] (Total) (in.)	DF/SP Allowable Download (100/115/125/160)	Code Ref.
		W	H	B	TF			
Z2	20	2⁵⁄₁₆	1½	1⅜	1⅜	(4) 0.148 x 1½	420	IBC, FL, LA
Z4	12	1½	3½	2⅛	1¾	(2) 0.162 x 3½	420	
Z28	28	2⁵⁄₁₆	1½	1⅜	1⅜	0.148 x 1½[1]	—	—
Z38	28	2⁵⁄₁₆	2½	1⅜	1⅜	0.148 x 1½[1]	—	
Z44	12	2½	3½	2	1⅜	(4) 0.162 x 3½	775	IBC, FL, LA

1. Z28 and Z38 do not have nail holes. Fastener quantity and type shall be per designer.
2. Z4 loads apply with a nail in the top and a nail in the seat.
3. For SPF/HF lumber, use 0.86 x DF/SP allowable loads.
4. **Fasteners:** Nail dimensions are listed diameter by length. See pp. 25–26 for fastener information.

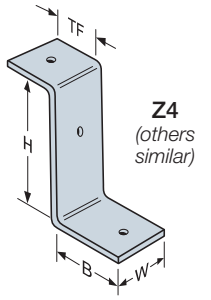

Z4 *(others similar)*

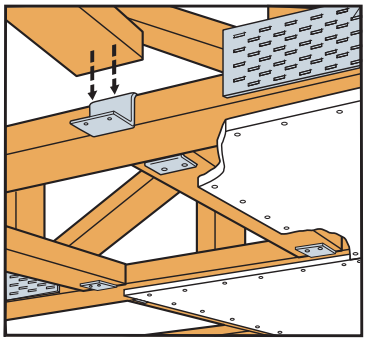

Typical Z2 Installation

C-C-2026 © 2026 SIMPSON STRONG-TIE COMPANY INC.